Issued: May 3, 2022

Tarsys®
Basic Tilt,
Tilt Only,
Recline 4XP,
Recline Only,
Tilt/Recline

For
Storm Series®
Power Wheelchairs

Yes, you can.

Parts Catalog Usage Guide

The information contained in this document is subject to change without notice. This catalog contains service parts for Form No. 96-194. If you have any questions regarding this catalog, please contact one of our Customer Service Representatives.

For Customer Service Support Call:
1-800-333-6900
For Faxed In Orders Call:
1-800-678-4682 or
1-440-366-0709
For Technical Service Call:
1-800-832-4707
Literature Can Be Found at:
www.invacare.com or
1-800-828-6272

SYMBOL DEFINITION

Throughout this catalog you will notice letters to draw your attention to specific footnotes which are located at the bottom of the page or below specified charts.

Examples:

A,B,C etc.	=	Special Comments
NOTE:	=	General information pertaining to that specific page
NLA	=	No Longer Available

HARDWARE MEASUREMENTS

The measurements for the hardware will be listed as follows:

Screws, Bolts	Diameter X Thread Count/Pitch X Length
Washers	Inside Diameter X Outside Diameter X Thickness
Spacers	Inside Diameter X Outside Diameter X Length

For your convenience, we have supplied an area for you to list your Invacare Representatives.

Name	Phone Numbers

© 2022 Invacare Corporation. Elyria, Ohio. Invacare, Yes, you can., the Blue Medallion Design, Storm Series, Arrow, and Tarsys are registered trademarks and Ranger X is a trademark of Invacare Corporation. Otto Bock is a registered trademark of Otto Bock Orthopaedische Industrie GMBH & Co.. SKF is a registered trademark of SKF Industries, Inc.. Motion Systems is a registered trademark of Motion Systems Corporation.

TABLE of CONTENTS

Description	Page Number
Accessories - Anti-Tip Wheel Extension Assembly - For 2G Suspension Arms (After 6/30/98)	156
Accessories - Arm Pads - Otto Bock	127
Accessories - Headrest Assembly - Profile and Recessed Back	131
Accessories - Headrest Support Assembly - A.B.S. Curved Back	129
Accessories - Headrest Support Assembly - Back Cane Only Option	133
Accessories - Lateral Support Assembly - Basic Recline (4XP) or Tilt/Recline & Recline Only	137
Accessories - Lateral Support Assembly - Basic Recline (4XP) or Tilt/Recline & Recline Only	142
Accessories - Lateral Support Assembly - Otto Bock, Basic Tilt & Tilt Only	135
Accessories - Lateral Support Assembly - Tarsys, Basic Tilt & Tilt Only	139
Accessories - Miscellaneous	161
Accessories - Power Wheelchair Tool Kit	159
Accessories - Retrofit Kits for Storm Power Bases	158
Accessories - Vent Tray Assembly - Basic Recline 4XP or Tilt/Recline & Recline Only (After 4/30/96)	151
Accessories - Vent Tray Assembly - Basic Recline 4XP or Tilt/Recline & Recline Only (Before 5/1/96)	146
Accessories - Vent Tray Assembly - Basic Tilt & Tilt Only (After 4/30/96)	148
Accessories - Vent Tray Assembly - Basic Tilt and Tilt Only (Before 5/1/96)	144
Accessories - Vent Tray Battery Box & Basket Assembly (After 4/30/96)	154
Arms - Basic Recline 4XP or Tilt/Recline & Recline Only	33
Arms - Basic Tilt & Tilt Only (After 10/14/98)	30
Arms - Basic Tilt & Tilt Only (Before 10/15/98)	27
Backs - A.B.S. Curved - Basic Recline 4XP	38

TABLE of CONTENTS

Description	Page Number
Backs - A.B.S. Curved - Basic Tilt & Tilt Only	35
Backs - A.B.S. Curved - Recline, Fixed Back (Non-VSR)	40
Backs - A.B.S. Curved - Recline, Sliding Back (VSR)	43
Backs - Mechanical Shear Reduction Linkage - Basic Recline 4XP	58
Backs - Profile - Fixed	46
Backs - Profile - Fixed, Non-VSR	49
Backs - Profile - Sliding, VSR	52
Backs - Recessed - Sliding, VSR	55
Canes - Back - Basic Tilt & Tilt Only	21
Canes - Back - Includes Recline Actuator - Basic Recline 4XP	23
Canes - Back - Tilt/Recline & Recline Only	25
Electronics - MAX Controller 5.0, 5.5 & 4-Way Switch - Tilt/Recline & Recline Only	84
Electronics - Max Controller 5.0, 5.5 & 4-Way Switch (Tilt Only)	82
Electronics - MAX Controller 5.7 S/N start at TE4000 & 4-Way Switch (Tilt Only)	86
Electronics - MAX Controller 5.7 S/N start at TE4000 & 4-Way Switch (Tilt/Recline & Recline Only)	89
Electronics - Midline Assembly	104
Electronics - MKIV Recliner Control (1815M4) & Recliner Cable - (Basic Tilt & Tilt Only) or (Basic Recline 4XP)	97
Electronics - Quad Link Assembly (After 4/06/06)	102
Electronics - Quad Link Assembly (Before 4/07/06)	98
Electronics - S.F.T. Switch w/ Drive Lockout and DAD Box - Basic Recline 4XP (Before 1/18/99)	74
Electronics - S.F.T. Switch w/ Drive Lockout and DAD Box - Basic Tilt Only (Before 1/18/99)	71

TABLE of CONTENTS

Description	Page Number
Electronics - S.F.T. Switch w/ Drive Lockout Built In - Basic Recline 4XP (After 1/17/99)	80
Electronics - S.F.T. Switch w/ Drive Lockout Built In - Basic Tilt Only (After 1/17/99)	78
Electronics - T.R.C.M. & 4-Way Switch - Tilt Only or Tilt/Recline & Recline Only	91
Electronics - T.R.C.M. Upgrade Kit w/ Mercury Free Switches - Tilt Only or Tilt/Recline & Recline Only	94
Frames - Seat & Hardware - Basic Tilt & Tilt Only or Tilt/Recline & Recline Only	7
Frames - Seat 2" Higher Seat-to-Floor Mounting Plate Assembly - Basic Tilt & Tilt Only	19
Frames - Seat and Hardware - Basic Recline 4XP	9
Frames - Seat Attaching Hardware - Basic Recline 4XP	14
Frames - Seat Attaching Hardware - Includes Tilt Actuator - Basic Tilt & Tilt Only	11
Frames - Seat Attaching Hardware - Tilt/Recline & Recline Only	16
Front Riggings - Front Rigging Hanger Assembly - Sector, Genius, Pin, AML4A Smartleg Style	106
Front Riggings - Front Rigging Hanger Assembly - Sector, Genius, Pin, AML4A Style (Basic Recline 4XP)	109
Front Riggings - Legrest - AT5544 (Power) - Tilt Only or Tilt/Recline & Recline Only	112
Front Riggings - Legrest - Genius - Tilt Only or Basic Recline 4XP or Tilt/Recline & Recline Only	116
Front Riggings - Legrest - Power Elevating - Basic Recline 4XP	113
Front Riggings - Legrest, Mechanical Actuator Linkage w/ M.S.R. - Basic Recline 4XP	122
Front Riggings - Legrest, Mechanical Actuator Linkage w/o M.S.R. - Basic Recline 4XP	120
Front Riggings - Motor Actuators, Genius & AT5544 Legrest - Tilt Only or Tilt/Recline & Recline Only	125
Motor Actuators - Tilt - Recline - V.S.R. (See Back Cane Assembly For BR4XP)	60
Packaging & Literature	6
Seat Pan & Extensions - Basic Recline 4XP	66

TABLE of CONTENTS

Description	Page Number
Seat Pan & Extensions - Basic Tilt & Tilt Only	63
Seat Pan & Extensions - Tilt/Recline & Recline Only	68

Packaging & Literature

Item Number	Note	Part Number	Description	Quantity Per	
				Package	Assembly
	A,B	0310600	Carton	1	1
	A,B	0310400	Insert, Carton	1	1
	A,C	0289400	Lid, Carton	1	2
	A,C	0289300	Carton, Skid Pack Sleeve	1	1
	A,C	0162400-NLA	NLA - Carton, Outer Pack	1	1
	A	0282500	Owner's Manual, Basic Recline (4XP)	1	1
	D	1164348	Mailer, Return, Mercury Free	1	1

NOTE: A - Not Shown
B - Seating System Only
C - Seating System with Base
D - For Massachusetss providers only.

NOTE: When adjusting or replacing parts, please refer to your owner's manual for assistance.

Seat Frame and Hardware

Basic Tilt and Tilt Only or Tilt/Recline and Recline Only

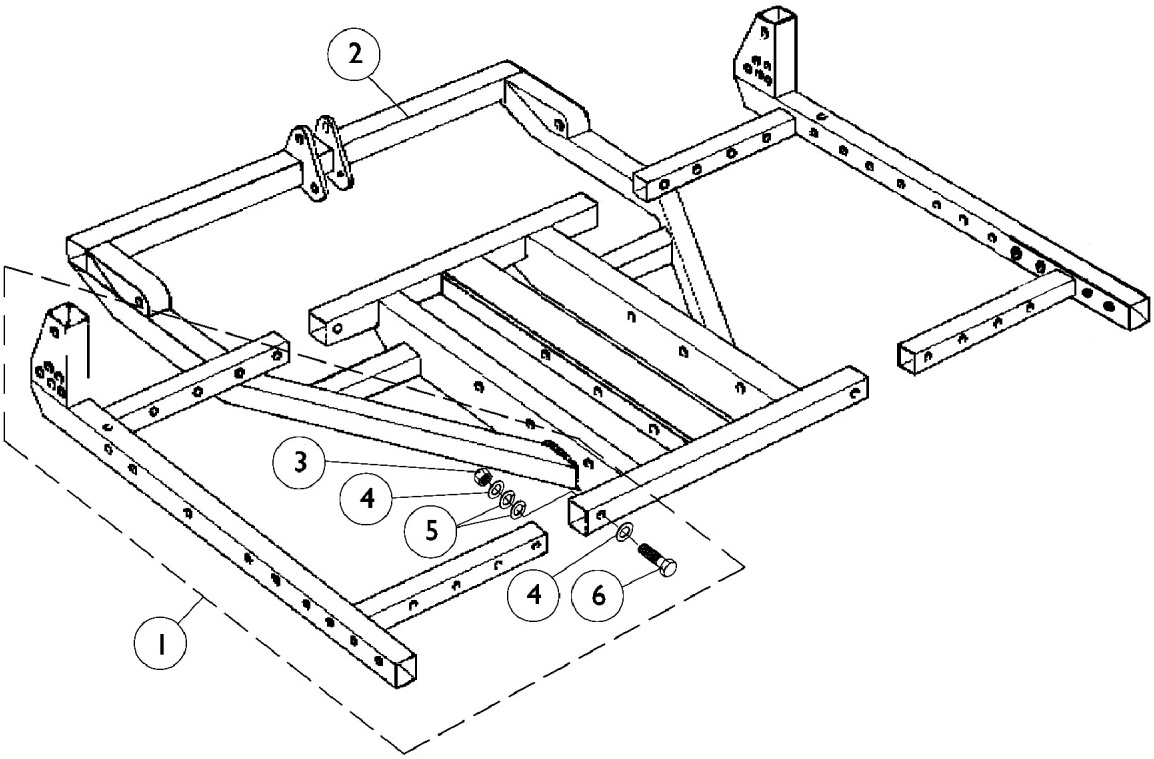

Seat Frame and Hardware

Basic Tilt and Tilt Only or Tilt/Recline and Recline Only

#1 Seat Side Frame and Hardware

Seat Depth	14-15" Wide Right	14-15" Wide Left	16-24" Wide Right	16-24" Wide Left
14"-15" Depth	1072933-NLA	1072934-NLA	N/A	N/A
16"-20" Depth	1072931-NLA	1072932-NLA	1072744-NLA	1072745-NLA
21"-24" Depth	N/A	N/A	1072807-NLA	1072808-NLA

Item Number	Note	Part Number	Description	Quantity Per	
				Package	Assembly
1	A	See Chart	Seat Side Frame and Hardware	1	1
2	B	0114702-NLA	NLA - Frame, Seat, Black	1	1
2	C	0208902-NLA	NLA - Frame, Seat, Black	1	1
3		1025736	Locknut (1/4-20)	1	2
4		0050406	Washer, Flat (1/4 x 5/8 x 1/16")	1	4
5		0050506-NLA	NLA - Lockwasher, High Collar, Split (1/4")	1	4
6		0051006-NLA	NLA - Screw, Hex Head Full Thread (1/4-20 x 1-1/2")	1	2

NOTE: A - Includes seat side frame and items 3-6
B - 14" - 20" Wide
C - 21" - 24" Wide

Seat Frame & Hardware
Basic Recline 4XP

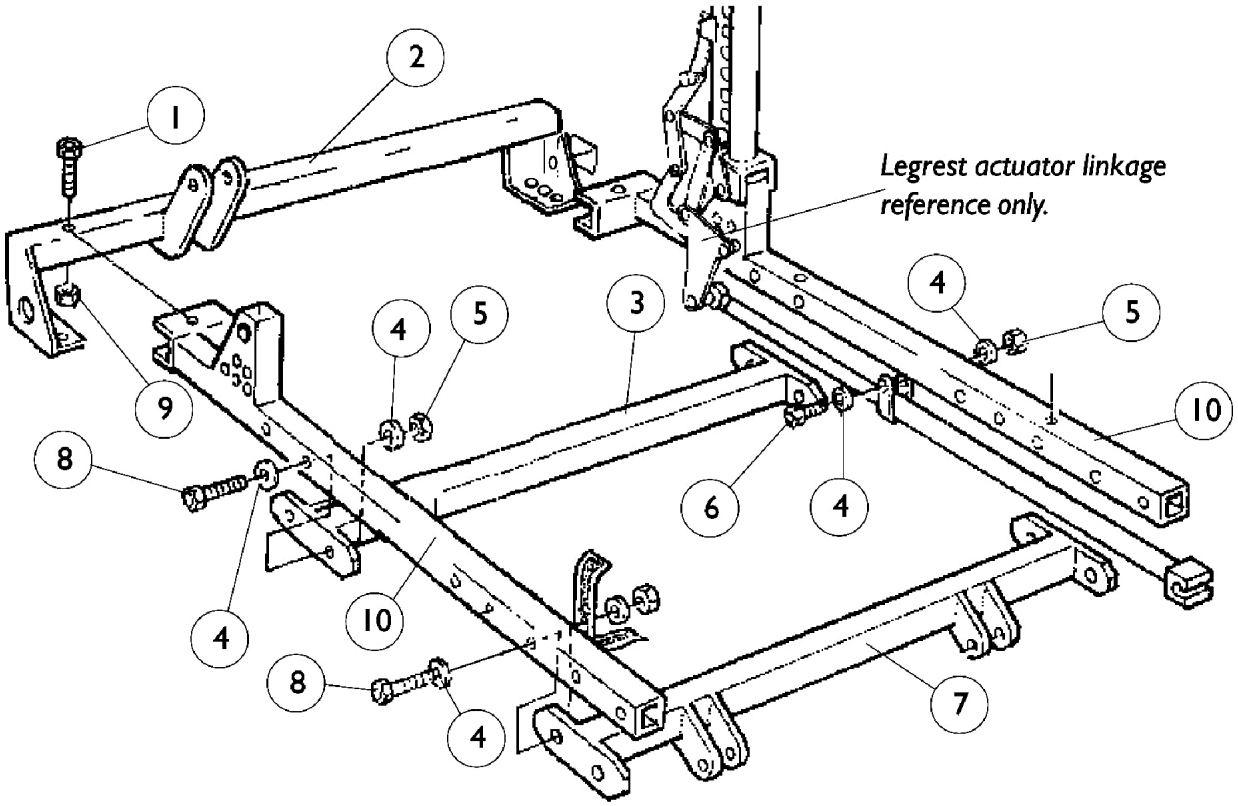

Seat Frame & Hardware

Basic Recline 4XP

Item Number	Note	Part Number	Description	Quantity Per	
				Package	Assembly
1		0055306	Screw, Hex Head (5/16-18 x 1-3/4")	1	2
2		0216302-NLA	NLA - Frame Assembly, Rear, 4XP (16" W)	1	1
2		0216402-NLA	NLA - Frame Assembly, Rear, 4XP (18" W)	1	1
3		0158402-NLA	NLA - Frame Assembly, Center, Black, 4XP (16" W)	1	1
3		0158502-NLA	NLA - Frame Assembly, Center, Black, 4XP (18" W)	1	1
4		0050406	Washer, Flat (1/4 x 5/8 x 1/16")	1	20
5		1025736	Locknut (1/4-20)	1	10
6		0051006-NLA	NLA - Screw, Hex Head Full Thread (1/4-20 x 1-1/2")	1	2
7		0216702-NLA	NLA - Frame Assembly, Front, Black, 4XP (16" W)	1	1
7		0216802-NLA	NLA - Frame Assembly, Center, Black, 4XP (18" W)	1	1
8		1024793-NLA	NLA - Screw, Hex Head (1/4-20 x 1-3/4")	1	8
9		0054906	Locknut, High Profile (5/16-18)	1	2
10		0216602-NLA	NLA - Frame, Seat Side, 4XP - Right	1	1
10		0216502-NLA	NLA - Frame, Seat Side, 4XP - Left	1	1

Seat Frame Attaching Hardware
Basic Tilt and Tilt Only

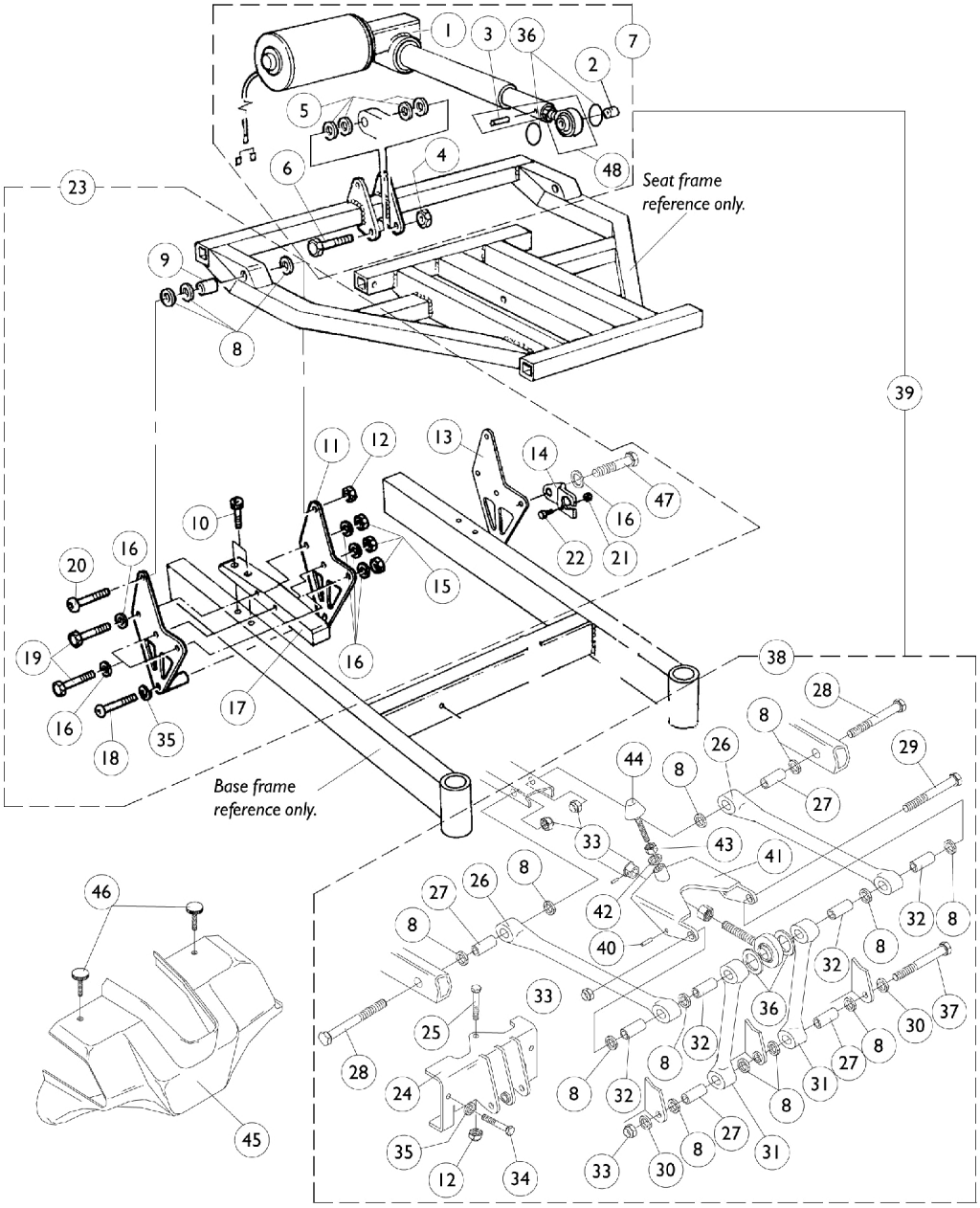

Seat Frame Attaching Hardware
Basic Tilt and Tilt Only

Item Number	Note	Part Number	Description	Quantity Per Package	Quantity Per Assembly
1	E	0308500-NLA	NLA - Actuator Motor Assembly, Large (5" Stroke)	1	1
2		0060500	Bushing (3/8 x 1/2 x 5/8")	1	1
3		1028848-NLA	NLA - Pin, Roll (1/8" x 7/8")	1	1
4		0054106-NLA	NLA - Locknut, High Profile (3/8-16)	1	1
5		0053900-NLA	NLA - Washer, Nylon (3/8 x 13/16 x 1/16")	1	4
6		1106223	Screw, Socket Head (3/8-16 x 2-1/2")	1	1
7		1072786-NLA	NLA - Actuator Motor w/ Hardware, Large (5" Stroke)	1	1
8		0055800-NLA	NLA - Washer, Nylon (7/16 x 3/4 x 3/32")	1	16
9		0060300-NLA	NLA - Bushing, Bronze (5/16 x 7/16 x 1-1/4")	1	2
10		0140506-NLA	NLA - Screw, Socket Head w/ Thread Lock (5/16-18 x 1")	1	4
11		0115102-NLA	NLA - Plate, Seat Frame Inner Mounting - Right	1	2
11		0115202-NLA	NLA - Plate, Seat Frame Inner Mounting - Left	1	2
12		0054906	Locknut, High Profile (5/16-18)	1	2
13		0115302-NLA	NLA - Plate, Seat Frame Outer Mounting - Right	1	2
13		0115402-NLA	NLA - Plate, Seat Frame Outer Mounting - Left	1	2
14		0190102-NLA	NLA - Bracket, Connector, Black	1	1
15		7930333	Locknut (1/4-20)	25	6
16		0050406	Washer, Flat (1/4 x 5/8 x 1/16")	1	12
17		0115024-NLA	NLA - Bar, Mounting	1	2
18		0140406-NLA	NLA - Screw, Socket Head, Cap (5/16-18 x 1-1/2")	1	2
19		0052306-NLA	NLA - Screw, Hex Head (1/4-20 x 2-1/4")	1	5
20		0055506-NLA	NLA - Screw, Button Head, Socket (5/16-18 x 2")	1	2
21		0143205-NLA	NLA - Locknut, Low Profile (#6-32)	1	2
22		313329-NLA	NLA - Screw, Phillips Pan Head (#6-32 x 1/2")	1	2
23		1072747	Plates, Seat Frame Mounting w/ Hardware	1	1
24		0115502	Link, Mounting Plate, Black	1	1
25		0139806-NLA	NLA - Screw, Hex Head (5/16-18 x 3")	1	1
26		0115624	Link, Tilt, Black - Upper	1	2
27		0120300	Bushing (3/8 x 1/2 x 7/8")	1	4
28		1106223	Screw, Socket Head (3/8-16 x 2-1/2")	1	2
29		0140306-NLA	NLA - Screw, Hex Head (3/8-16 x 4-1/2")	1	1
30		0140006	Washer, Steel (13/32 x 5/8 x 1/32")	1	2
31		0115724	Link, Tilt, Black - Lower	1	2
32		0120100	Bushing (3/8 x 1/2 x 3/4")	1	4
33		0054106-NLA	NLA - Locknut, High Profile (3/8-16)	1	4
34		0139606-NLA	NLA - Screw, Hex Head (5/16-18 x 1")	1	2
35		1072692-NLA	NLA - Lockwasher, Split (5/16")	1	4
36		0140600	Washer, Rubber (13/16 x 13/32 x 3/32)	1	2
37		0140206-NLA	NLA - Screw, Hex Head (3/8-16 x 3-1/2")	1	1
38	D	1072809	Hardware, Seat Frame Mounting	1	1
39		1072746-NLA	NLA - Hardware, Tilt Actuator w/ Tilt Mounting	1	1

Seat Frame Attaching Hardware

Basic Tilt and Tilt Only

Item Number	Note	Part Number	Description	Quantity Per	
				Package	Assembly
40		1077357-NLA	NLA - Pin, Roll (3/16 x 1-1/8" Long)	1	1
41		0211102	Stop, Tilt, Black	1	1
42		1077358	Lockwasher, Split (3/8-16)	1	1
43		1077359	Nut, Hex (3/8-16)	1	1
44		0225100-NLA	NLA - Bumper, Tilt	1	1
45	C	0309019-NLA	NLA - Cover, Controller	1	1
46		1077365	Knob, Thumb Screw (5/16-18 x 1")	1	1
47		0052206	Screw, Hex Head (1/4-20 x 2-1/2")	1	1
48	A	0313900-NLA	NLA - Rod, End with Locknut and Roll Pin	1	1
48	B	1077197	Rod, End w/ Locknut and Roll Pin	1	1

NOTE: A - SKF Actuator
B - Motion Systems Actuator
C - Tarsys/Storm
D - Tilt
E - No longer available as a service part individually. See item 7 part #1072786 as a replacement.

Seat Frame Attaching Hardware
Basic Recline 4XP

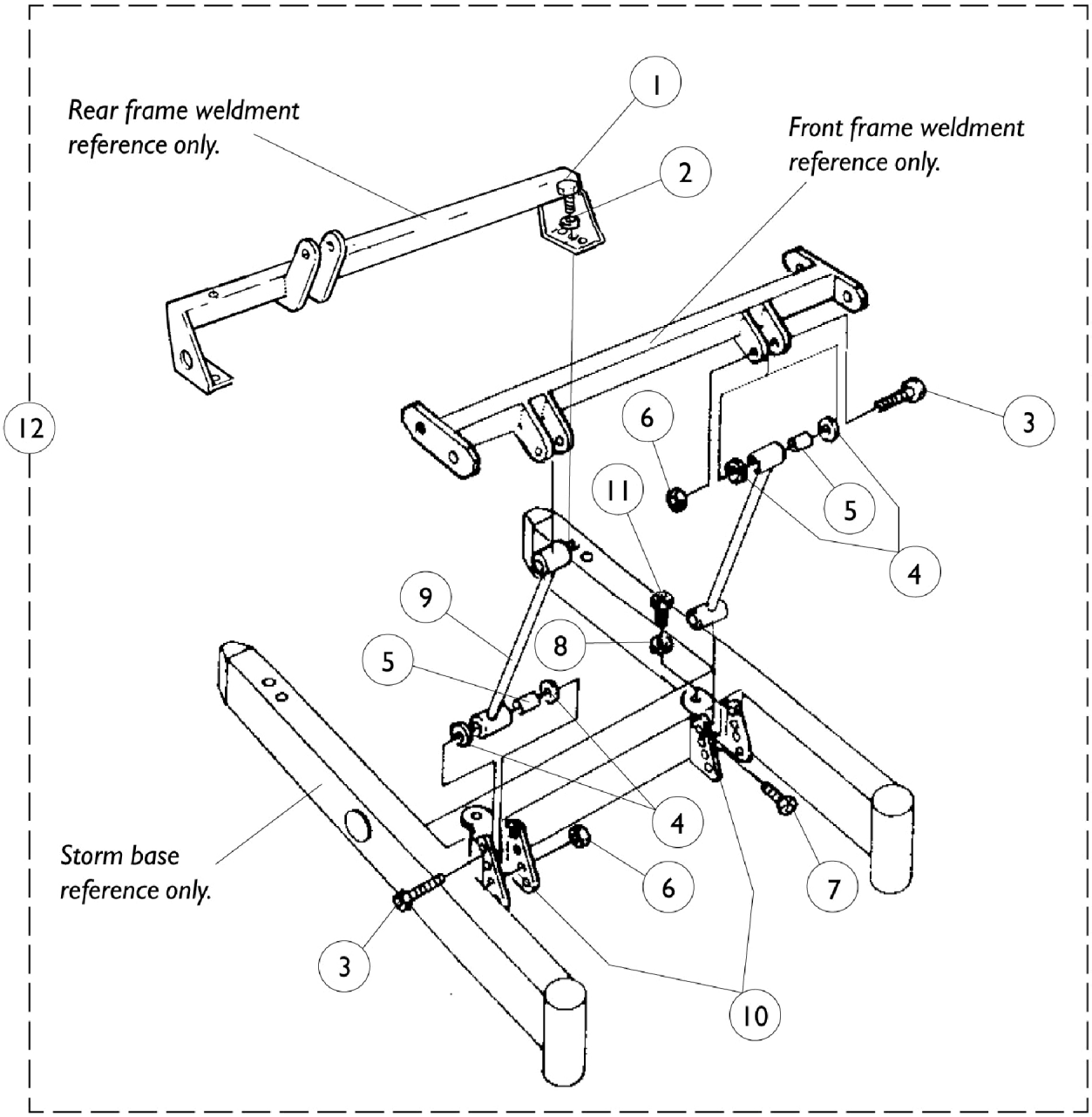

Seat Frame Attaching Hardware

Basic Recline 4XP

Item Number	Note	Part Number	Description	Quantity Per	
				Package	Assembly
1		0140506-NLA	NLA - Screw, Socket Head w/ Thread Lock (5/16-18 x 1")	1	4
2		0054806-NLA	NLA - Washer, Flat (11/32 x 11/16 x 1/16")	1	4
3		0131406	Screw, Hex Head (5/16-18 x 1-3/4")	1	4
4		0139900	Washer, Nylon (1/2 x 3/4 x 3/32")	1	8
5		0280700-NLA	NLA - Bushing (5/16 x 1/2 x 7/8")	1	4
6		0054906	Locknut, High Profile (5/16-18)	1	4
7		0055406-NLA	NLA - Screw, Machine, Button Head, Socket (5/16-18 x 1")	1	2
8		1072692-NLA	NLA - Lockwasher, Split (5/16")	1	2
9		0115724	Link, Tilt, Black - Lower	1	2
10		0215300	Bracket, Seat Support, Black	1	2
11		0139606-NLA	NLA - Screw, Hex Head (5/16-18 x 1")	1	2
12		1077373	Hardware Assembly, Seat Attaching - 4XP	1	1

Seat Frame Attaching Hardware
Tilt/Recline and Recline Only

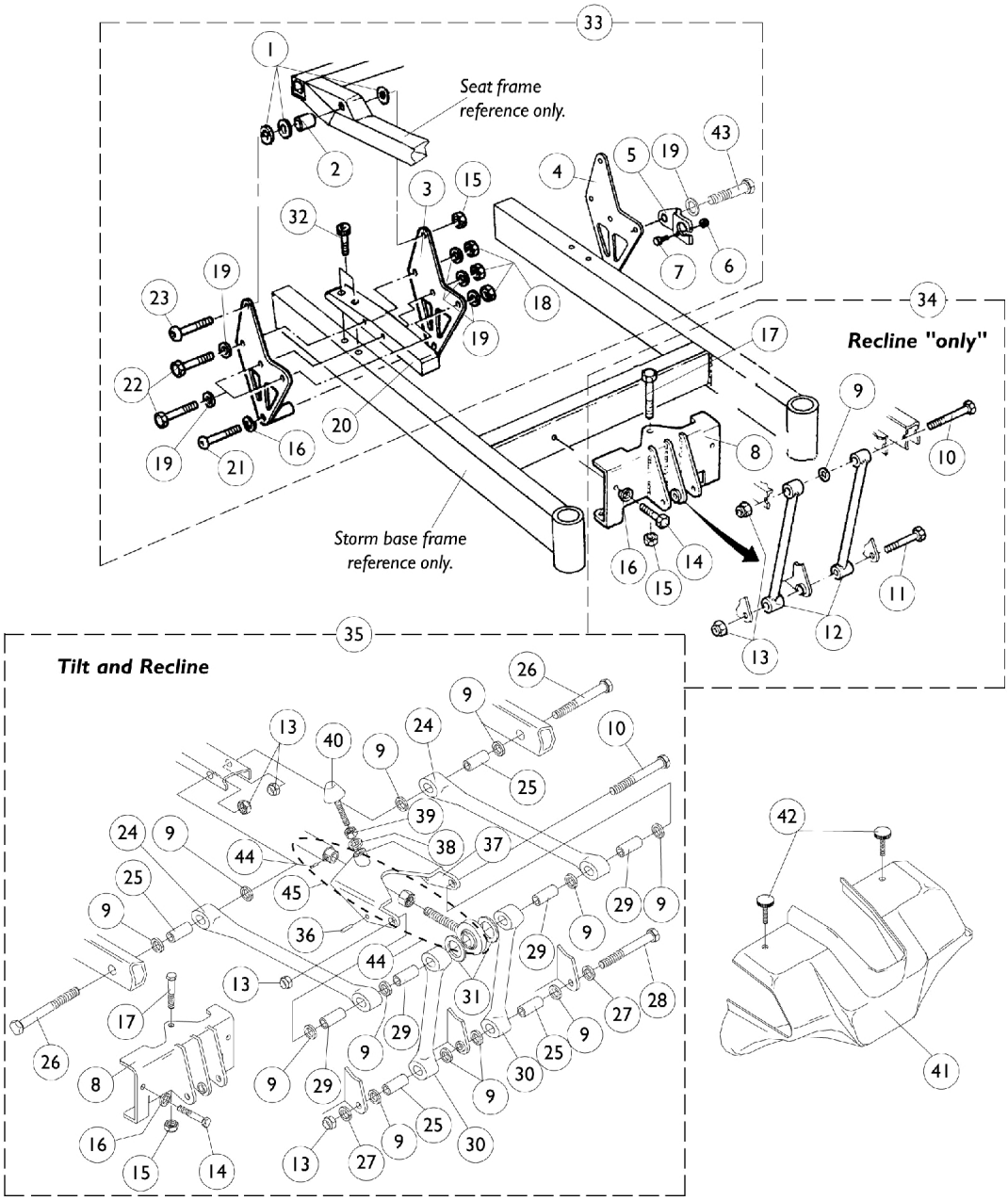

Seat Frame Attaching Hardware

Tilt/Recline and Recline Only

Item Number	Note	Part Number	Description	Quantity Per Package	Quantity Per Assembly
1		0055800-NLA	NLA - Washer, Nylon (7/16 x 3/4 x 3/32")	1	6
2		0060300-NLA	NLA - Bushing, Bronze (5/16 x 7/16 x 1-1/4")	1	2
3		0115102-NLA	NLA - Plate, Seat Frame Inner Mounting - Right	1	2
3		0115202-NLA	NLA - Plate, Seat Frame Inner Mounting - Left	1	2
4		0115302-NLA	NLA - Plate, Seat Frame Outer Mounting - Right	1	1
4		0115402-NLA	NLA - Plate, Seat Frame Outer Mounting - Left	1	1
5		0190102-NLA	NLA - Bracket, Connector, Black	1	1
6		0143205-NLA	NLA - Locknut, Low Profile (#6-32)	1	2
7		313229-NLA	NLA - Screw, Phillips Pan Head (#6-32 x 1/2")	1	2
8		0115502	Link, Mounting Plate, Black	1	1
9		0055800-NLA	NLA - Washer, Nylon (7/16 x 3/4 x 3/32")	1	11
10		0140306-NLA	NLA - Screw, Hex Head (3/8-16 x 4-1/2")	1	2
11		0140206-NLA	NLA - Screw, Hex Head (3/8-16 x 3-1/2")	1	1
12		0118524	Link, Tilt	1	2
13		0054106-NLA	NLA - Locknut, High Profile (3/8-16)	1	5
14		0139606-NLA	NLA - Screw, Hex Head (5/16-18 x 1")	1	2
15		0054906	Locknut, High Profile (5/16-18)	1	1
16		1072692-NLA	NLA - Lockwasher, Split (5/16")	1	4
17		0139806-NLA	NLA - Screw, Hex Head (5/16-18 x 3")	1	1
18		7930333	Locknut (1/4-20)	25	6
19		0050406	Washer, Flat (1/4 x 5/8 x 1/16")	1	12
20		0115024-NLA	NLA - Bar, Mounting	1	2
21		0140406-NLA	NLA - Screw, Socket Head, Cap (5/16-18 x 1-1/2")	1	2
22		0052306-NLA	NLA - Screw, Hex Head (1/4-20 x 2-1/4")	1	5
23		0055506-NLA	NLA - Screw, Button Head, Socket (5/16-18 x 2")	1	2
24		0115624	Link, Tilt, Black - Upper	1	2
25		0120300	Bushing (3/8 x 1/2 x 7/8")	1	4
26		1106223	Screw, Socket Head (3/8-16 x 2-1/2")	1	1
27		0140006	Washer, Steel (13/32 x 5/8 x 1/32")	1	4
28		0140206-NLA	NLA - Screw, Hex Head (3/8-16 x 3-1/2")	1	1
29		0120100	Bushing (3/8 x 1/2 x 3/4")	1	4
30		0115724	Link, Tilt, Black - Lower	1	2
31		0140600	Washer, Rubber (13/16 x 13/32 x 3/32)	1	2
32		0140506-NLA	NLA - Screw, Socket Head w/ Thread Lock (5/16-18 x 1")	1	2
33		1072747	Plates, Seat Frame Mounting w/ Hardware	1	1
34	A	1072810-NLA	NLA - Hardware, Seat Frame Mounting	1	1
35	B	1072809	Hardware, Seat Frame Mounting	1	1
36		1077357-NLA	NLA - Pin, Roll (3/16 x 1-1/8" Long)	1	1
37		0211102	Stop, Tilt, Black	1	1
38		1077358	Lockwasher, Split (3/8-16)	1	1
39		1077359	Nut, Hex (3/8-16)	1	1
40		0225100-NLA	NLA - Bumper, Tilt	1	1

Seat Frame Attaching Hardware

Tilt/Recline and Recline Only

Item Number	Note	Part Number	Description	Quantity Per Package	Quantity Per Assembly
41	C	0309019-NLA	NLA - Cover, Controller	1	1
42		1077365	Knob, Thumb Screw (5/16-18 x 1")	1	1
43		0052206	Screw, Hex Head (1/4-20 x 2-1/2")	1	1
44		0308600	Pin, Roll (1/8 x 7/8")	1	1
45	D	0313900-NLA	NLA - Rod, End with Locknut and Roll Pin	1	1
45	E	1077197	Rod, End w/ Locknut and Roll Pin	1	1

NOTE: A - Recline "Only"
B - Tilt "and" Recline
C - Tarsys/Storm
D - SKF Actuator
E - Motion Systems Actuator

2" Higher Seat-to-Floor Mounting Plate Assembly

Basic Tilt and Tilt Only

NOTE: Storm Arrow heavy duty bases come standard with 2" higher seat-to-floor assemblies. Non-heavy duty bases are done as a "special" when ordered "on-chair" with the original order.

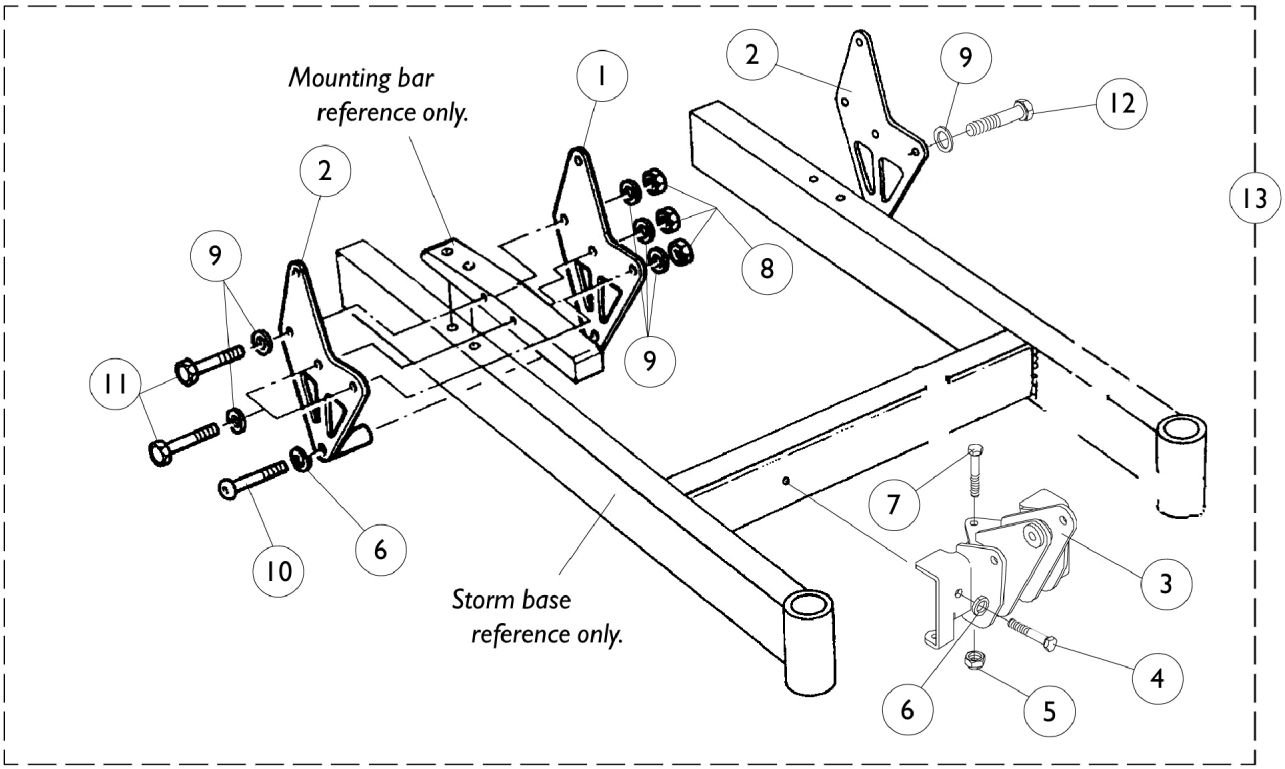

2" Higher Seat-to-Floor Mounting Plate Assembly

Basic Tilt and Tilt Only

Item Number	Note	Part Number	Description	Quantity Per	
				Package	Assembly
1		0195302-NLA	NLA - Plate, Seat Frame Inner Mounting, Right (20" S.T.F.)	1	1
1		0195202-NLA	NLA - Plate, Seat Frame Inner Mounting, Left (20" S.T.F.)	1	1
2		0195502-NLA	NLA - Plate, Seat Frame Outer Mounting, Right (20" S.T.F.)	1	1
2		0195402-NLA	NLA - Plate, Seat Frame Outer Mounting, Left (20" S.T.F.)	1	1
3		0188202	Plate, Link Mounting (20" S.T.F.)	1	1
4		0139606-NLA	NLA - Screw, Hex Head (5/16-18 x 1")	1	2
5		0054906	Locknut, High Profile (5/16-18)	1	2
6		1072692-NLA	NLA - Lockwasher, Split (5/16")	1	4
7		0139806-NLA	NLA - Screw, Hex Head (5/16-18 x 3")	1	1
8		7930333	Locknut (1/4-20)	25	6
9		0050406	Washer, Flat (1/4 x 5/8 x 1/16")	1	12
10		0140406-NLA	NLA - Screw, Socket Head, Cap (5/16-18 x 1-1/2")	1	2
11		0052306-NLA	NLA - Screw, Hex Head (1/4-20 x 2-1/4")	1	5
12		0052206	Screw, Hex Head (1/4-20 x 2-1/2")	1	1
13	A	1072683	Retrofit Assembly, Raise Seat-To-Floor 2"	1	1

NOTE: A - Includes items 1-12

Back Cane Assembly
Basic Tilt and Tilt Only

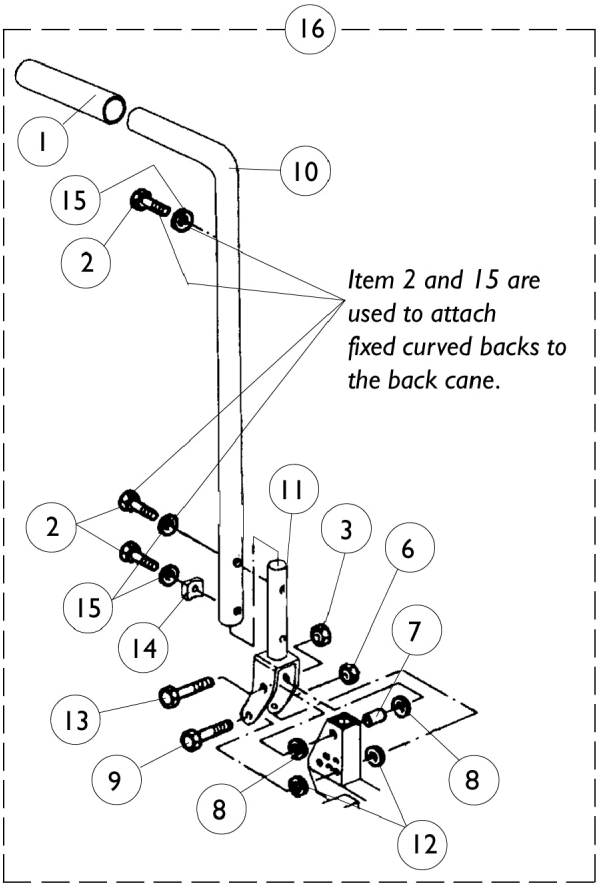

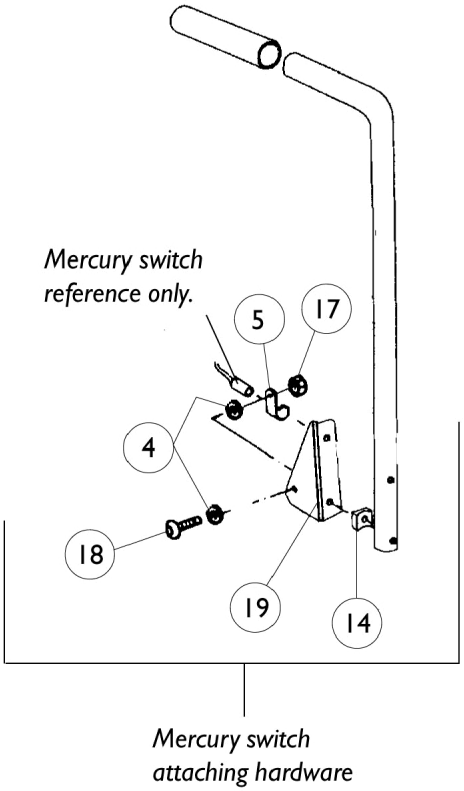

Back Cane Assembly
Basic Tilt and Tilt Only

Item Number	Note	Part Number	Description	Quantity Per	
				Package	Assembly
1		0014500-NLA	NLA - Grip, Hand	1	1
2		0053006-NLA	NLA - Screw, Hex Head (1/4-20 x 3/4")	1	3
3		7930333	Locknut (1/4-20)	25	1
4		0050006-NLA	NLA - Lockwasher, External Star (1/4")	2	2
5		0062800-NLA	NLA - Bracket, Cable/Wire Mounting, Black	1	1
6		0054906	Locknut, High Profile (5/16-18)	1	1
7		0060600	Bushing (7/16 x 5/16 x 1-1/4")	1	1
8		0055800-NLA	NLA - Washer, Nylon (7/16 x 3/4 x 3/32")	1	4
9		0055506-NLA	NLA - Screw, Button Head, Socket (5/16-18 x 2")	1	1
10		0309902-NLA	NLA - Back Cane Assembly	1	1
11		0116702-NLA	NLA - Post, Mounting	1	1
12		0054700-NLA	NLA - Washer, Nylon (5/16 x 1/2 x 1/16")	1	4
13		0052606-NLA	NLA - Screw, Hex Head (1/4-20 x 2")	1	1
14		0049824-NLA	NLA - Spacer, Coved (1/4 x 3/4 x 7/16")	1	1
15		0050506-NLA	NLA - Lockwasher, High Collar, Split (1/4")	1	3
16		1072788-NLA	NLA - Back Cane Assembly	1	1
17		7930332-NLA	NLA - Locknut, High Profile (#10-32)	25	1
18		0139306-NLA	NLA - Screw, Socket Button Head (#10-32 x 3/4")	1	1
19		0002902-NLA	NLA - Bracket, Mounting, Black - Left	1	1

Back Cane Assembly
Basic Recline (4XP)

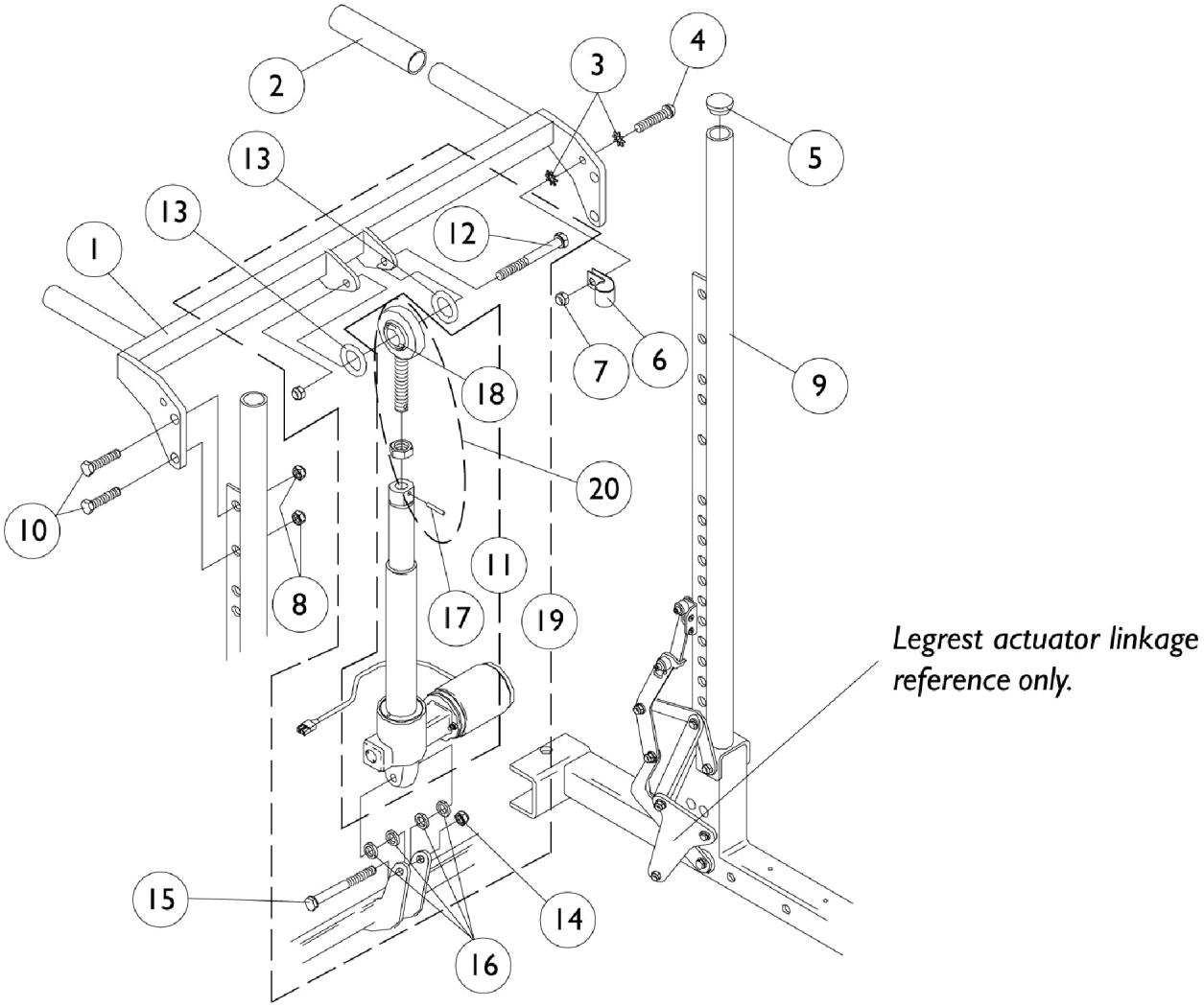

Back Cane Assembly
Basic Recline (4XP)

Item Number	Note	Part Number	Description	Quantity Per Package	Quantity Per Assembly
1	A	1077416	Push Bar with Hardware, 16" Wide	1	1
1	A	1077417	Push Bar with Hardware, 18" Wide	1	1
2		0014500-NLA	NLA - Grip, Hand	1	2
3		1077143	Lockwasher, External Tooth (#10)	1	2
4		0139306-NLA	NLA - Screw, Socket Button Head (#10-32 x 3/4")	1	1
5		1027095	Plug Button, Black (7/8")	1	2
6		0062800-NLA	NLA - Bracket, Cable/Wire Mounting, Black	1	1
7		7930332-NLA	NLA - Locknut, High Profile (#10-32)	25	1
8		7930333	Locknut (1/4-20)	25	4
9		0029324-NLA	NLA - Post, Back, Recliner	1	2
10		0053006-NLA	NLA - Screw, Hex Head (1/4-20 x 3/4")	1	4
11		0309600-NLA	NLA - Actuator Motor, Basic Recline, (4XP) (4.5" Stroke)	1	1
12		0054606-NLA	NLA - Screw, Hex Head (3/8-16 x 2")	1	1
13		0056000-NLA	NLA - O-Ring (1/2 x 7/8 x 3/16")	1	2
14		0054106-NLA	NLA - Locknut, High Profile (3/8-16)	1	2
15		1106223	Screw, Socket Head (3/8-16 x 2-1/2")	1	1
16		0053900-NLA	NLA - Washer, Nylon (3/8 x 13/16 x 1/16")	1	4
17		1028848-NLA	NLA - Pin, Roll (1/8" x 7/8")	1	1
18		0060500	Bushing (3/8 x 1/2 x 5/8")	1	1
19	B	1077402-NLA	NLA - Actuator Motor w/ Hardware	1	1
20	C	0313900-NLA	NLA - Rod, End with Locknut and Roll Pin	1	1
20	D	1077197	Rod, End w/ Locknut and Roll Pin	1	1

NOTE: A - Includes items 2, 8, 10
B - Includes items 11-18
C - SKF Actuator
D - Motion Systems Actuator

Back Cane Assembly
Tilt/Recline & Recline Only

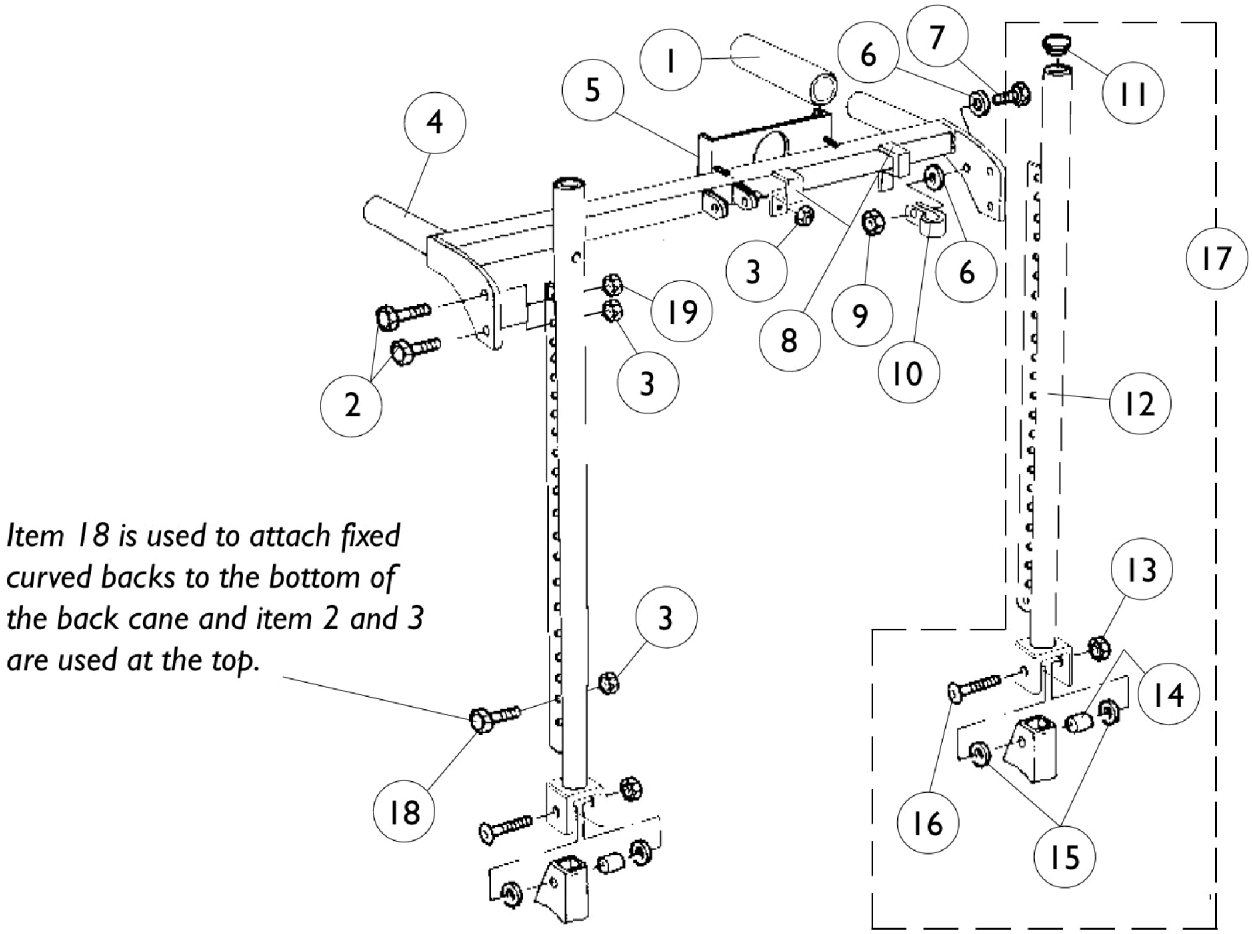

Back Cane Assembly
Tilt/Recline & Recline Only

Item Number	Note	Part Number	Description	Quantity Per Package	Quantity Per Assembly
1		0014500-NLA	NLA - Grip, Hand	1	2
2		0053006-NLA	NLA - Screw, Hex Head (1/4-20 x 3/4")	1	4
3		7930333	Locknut (1/4-20)	25	6
4	B	1072883	Push Bar with Hardware, 14" Wide	1	1
4	B	1072884	Push Bar with Hardware, 15" Wide	1	1
4	B	1072812	Push Bar with Hardware, 16" Wide	1	1
4	B	1072813	Push Bar with Hardware, 17" Wide	1	1
4	B	1072814	Push Bar with Hardware, 18" Wide	1	1
4	B	1072815	Push Bar with Hardware, 19" Wide	1	1
4	B	1072816	Push Bar with Hardware, 20" Wide	1	1
4	B	1072885	Push Bar with Hardware, 21" Wide	1	1
4	B	1072886	Push Bar with Hardware, 22" Wide	1	1
5	A	0117206-NLA	NLA - Plate, Max Controller Mounting (4.0-5.5)	1	1
6		0050006-NLA	NLA - Lockwasher, External Star (1/4")	2	2
7		0067106-NLA	NLA - Screw, Phillips Pan Head (#10-32 x 1/2")	1	1
8		0188902	Bracket, Max Controller Mounting	1	2
9		7930332-NLA	NLA - Locknut, High Profile (#10-32)	25	1
10		0062800-NLA	NLA - Bracket, Cable/Wire Mounting, Black	1	1
11		1027095	Plug Button, Black (7/8")	1	2
12		0029324-NLA	NLA - Post, Back, Recliner	1	2
13		0054906	Locknut, High Profile (5/16-18)	1	2
14		0060600	Bushing (7/16 x 5/16 x 1-1/4")	1	2
15		0055800-NLA	NLA - Washer, Nylon (7/16 x 3/4 x 3/32")	1	4
16		0055506-NLA	NLA - Screw, Button Head, Socket (5/16-18 x 2")	1	2
17		1072811-NLA	NLA - Back Cane Assembly	1	2
18		0053006-NLA	NLA - Screw, Hex Head (1/4-20 x 3/4")	1	2
19		7930323-NLA	NLA - Package, Locknut (1/4-20)	25	2

NOTE: A - Only used on systems with 4.0 to 5.5 MAX box.
B - Includes items 1-3

Armrest Assembly
Non-Flip Back Arms (Before 10/15/98)
Basic Tilt and Tilt Only

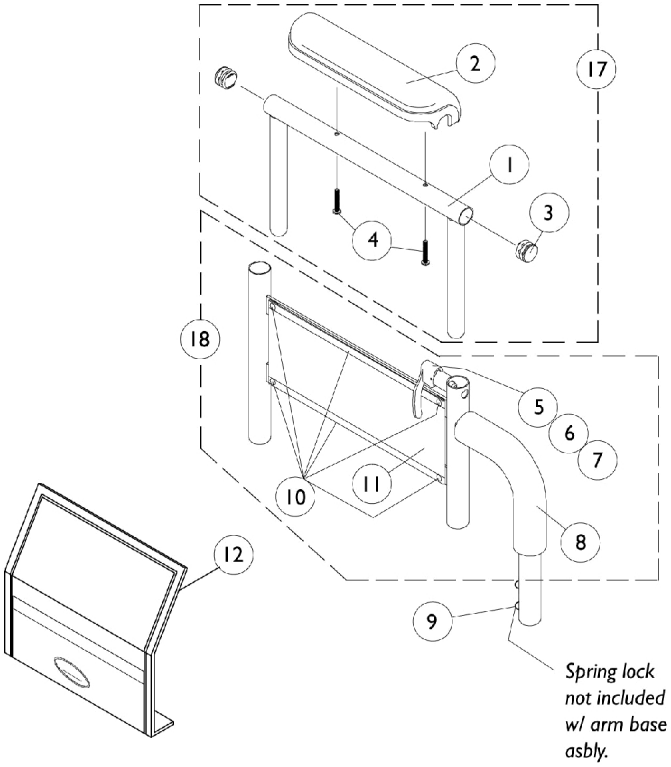

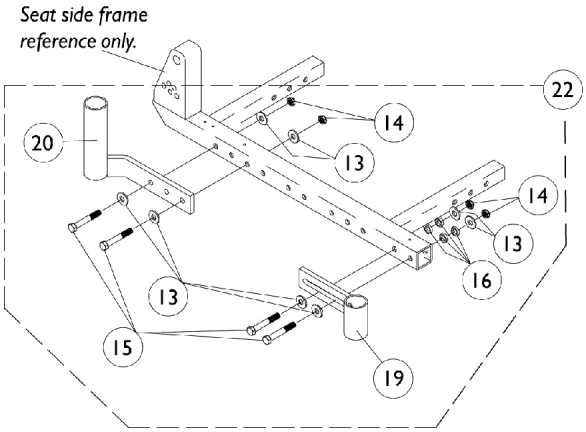

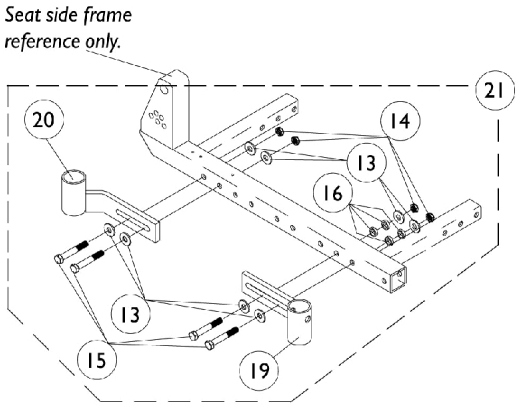

14" Deep chairs only.

Armrest Assembly
Non-Flip Back Arms (Before 10/15/98)
Basic Tilt and Tilt Only

Item Number	Note	Part Number	Description	Quantity Per	
				Package	Assembly
1		1041522	Arm Tube Assembly w/ Plug Buttons, Full Length, Black - Right/Left	1	1
1		1070859	Arm Tube Assembly w/ Plug Buttons, Desk Length, Black - Right/Left	1	1
2	A	1117328	Kit, Arm Pad w/ Screws, Full Length, Urethane Waterfall, Black (13" L x 2-5/8" W)	1	1
2		1110818	Kit, Arm Pad w/ Screws, Full Length, Urethane Waterfall, Black (13" L x 2-5/8" W) (Pair)	2	1
2	A	1117327	Kit, Arm Pad w/ Screws, Desk Length, Urethane Waterfall, Black (9" L x 2-5/8" W)	1	1
2		1110817	Kit, Arm Pad w/ Screws, Desk Length, Urethane Waterfall, Black (9" L x 2-5/8" W) (Pair)	2	1
3		1027095	Plug Button, Black (7/8")	1	2
4		1055949	Package, Screw, Phillips Pan Head (#10-32 x 1-3/8")	2	1
4	B	1094270-NLA	NLA - Package, Screw, Phillips Pan Head (#10-32 x 1-1/4")	2	1
5		1090768	Kit, Lock Handle w/Rivets (Pair)	2	1
6		47471X074	Spring, Arm Lock	1	1
7		1028594	Pin, Arm Lock, Black	1	1
8		1032245	Grip, Foam Hand (6-7/8" L)	1	1
9		1018225	Spring, Torsion with Button Lock	1	1
10		1028645	Rivet	1	6
11		1064130-NLA	NLA - Guard, Clothing	1	1
12		1035065	Cover, Clothing Guard w/ Pocket, FXDESK & ADJFULL/ADJDESK	1	1
13		0050406	Washer, Flat (1/4 x 5/8 x 1/16")	1	8
14		7930333	Locknut (1/4-20)	25	4
15		1024793-NLA	NLA - Screw, Hex Head (1/4-20 x 1-3/4")	1	4
16		0050506-NLA	NLA - Lockwasher, High Collar, Split (1/4")	1	4
	C	See Chart	Armrest Assembly - 14-15" Deep	1	1

NOTE: A - As of 1/3/02 upholstered waterfall armpads were replaced with black urethane waterfall armpads. Order in pairs with screws for chairs serviced before 1/3/02.
B - For Black Urethane Waterfall Arm Pads only
C - Not Shown

Item Number	17	17	18	19	20	21
Description	Arm Tube with Arm Pad Full Length	Arm Tube with Arm Pad Desk Length	Arm Base Assembly	Armrest Socket Front	Armrest Socket Rear	Armrest Mounting Hardware

Armrest Assembly
Non-Flip Back Arms (Before 10/15/98)
Basic Tilt and Tilt Only

Item Number	17	17	18	19	20	21
14" Deep Right	1110821-NLA See Note(s) A	1110819-NLA See Note(s) A	1072943-NLA	1072951-NLA	0121602-NLA	1072949
14" Deep Left	1110822-NLA See Note(s) A	1110820-NLA See Note(s) A	1072944-NLA	1072952-NLA	0121502-NLA	1072950
15" and Deeper Right	1110821-NLA See Note(s) A	1110819-NLA See Note(s) A	1057411-NLA	0121502-NLA	0121302-NLA	1072789-NLA
15" and Deeper Left	1110822-NLA See Note(s) A	1110820-NLA See Note(s) A	1057412	0121602-NLA	0121402-NLA	1072930-NLA

NOTE: A - As of 1/3/02 upholstered waterfall armpads were replaced with black urethane waterfall armpads. Order right and left arm tube with arm pad for chairs serviced before 1/3/02.

Armrest Assembly
Flip Back Arms (After 10/14/98)
Basic Tilt and Tilt Only

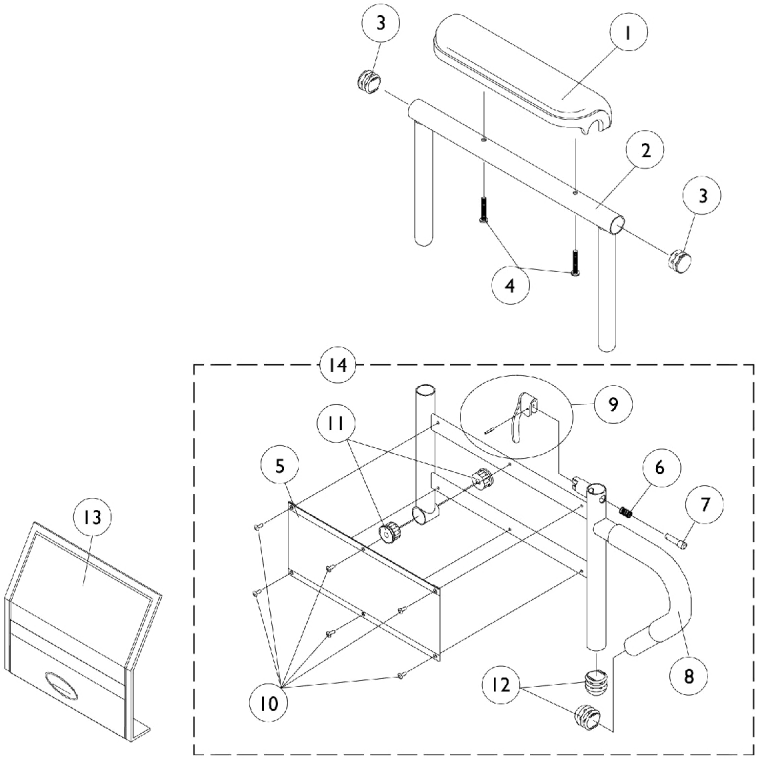

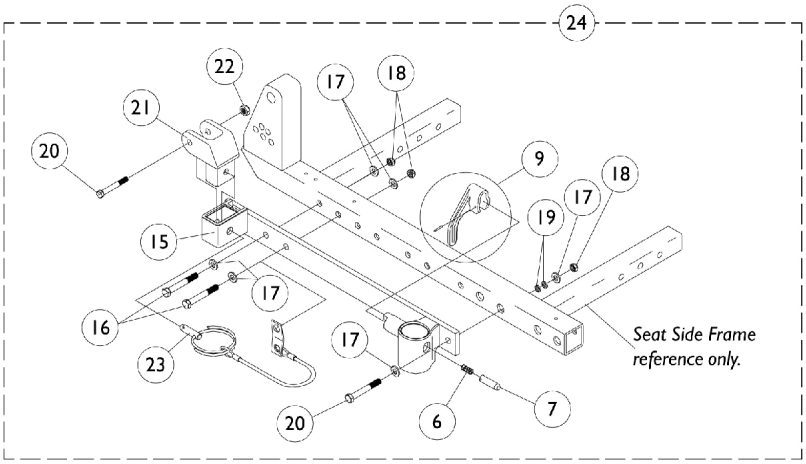

Armrest Assembly
Flip Back Arms (After 10/14/98)
Basic Tilt and Tilt Only

Item Number	Note	Part Number	Description	Quantity Per Package	Quantity Per Assembly
1	A	1117328	Kit, Arm Pad w/ Screws, Full Length, Urethane Waterfall, Black (13" L x 2-5/8" W)	1	1
1		1110818	Kit, Arm Pad w/ Screws, Full Length, Urethane Waterfall, Black (13" L x 2-5/8" W) (Pair)	2	1
1	A	1117327	Kit, Arm Pad w/ Screws, Desk Length, Urethane Waterfall, Black (9" L x 2-5/8" W)	1	1
1		1110817	Kit, Arm Pad w/ Screws, Desk Length, Urethane Waterfall, Black (9" L x 2-5/8" W) (Pair)	2	1
2		1071253	Arm Tube Assembly w/ Plug Buttons, Full Length, Black - Right/Left	1	1
2		1070859	Arm Tube Assembly w/ Plug Buttons, Desk Length, Black - Right/Left	1	1
3		1027095	Plug Button, Black (7/8")	1	2
4		1055949	Package, Screw, Phillips Pan Head (#10-32 x 1-3/8")	2	1
4	B	1094270-NLA	NLA - Package, Screw, Phillips Pan Head (#10-32 x 1-1/4")	2	1
5		1064130-NLA	NLA - Guard, Clothing	1	1
6		47471X074	Spring, Arm Lock	1	1
7		1028594	Pin, Arm Lock, Black	1	1
8		1032244	Grip, Foam Hand (9" L)	1	1
9		1090768	Kit, Lock Handle w/Rivets (Pair)	2	1
10		1028645	Rivet	1	6
11		1065936	Plug, Pivot	1	2
12		1067734	Plug Button, Black (5/8")	1	2
13		1035065	Cover, Clothing Guard w/ Pocket, FXDESK & ADJFULL/ADJDESK	1	1
14		1068416	Arm Base Assembly, Black - Right (16-19" D)	1	1
14		1068417	Arm Base Assembly, Black - Left (16-19" D)	1	1
14		1068418	Arm Base Assembly, Black - Right (20" and Deeper)	1	1
14		1068419	Arm Base Assembly, Black - Left (20" and Deeper)	1	1
14		1067761	Arm Base Assembly, 1" Lower, Black - Right (16-19" D)	1	1
14		1067762	Arm Base Assembly, 1" Lower, Black - Left (16-19" D)	1	1
14		1067755-NLA	NLA - Arm Base Assembly, 1" Lower, Black - Right (20" and Deeper)	1	1
14		1067756-NLA	NLA - Arm Base Assembly, 1" Lower, Black - Left (20" and Deeper)	1	1
15		1078053-NLA	NLA - Receptacle, Flip Back Arm, Black - Right	1	1
15		1078052-NLA	NLA - Receptacle, Flip Back Arm, Black - Left	1	1
16		1024793-NLA	NLA - Screw, Hex Head (1/4-20 x 1-3/4")	1	3
17		0050406	Washer, Flat (1/4 x 5/8 x 1/16")	1	6

Armrest Assembly
Flip Back Arms (After 10/14/98)
Basic Tilt and Tilt Only

Item Number	Note	Part Number	Description	Quantity Per	
				Package	Assembly
18		7930333	Locknut (1/4-20)	25	3
19		0050506-NLA	NLA - Lockwasher, High Collar, Split (1/4")	1	2
20		1030949	Screw, Hex Head (1/4-20 x 1-1/2")	1	1
21		1068025	Clevis, Pivot	1	1
22		7930323-NLA	NLA - Package, Locknut (1/4-20)	25	1
23		1068039	Pin, Pull	1	1
24	C	1081427-NLA	NLA - Hardware, Armrest Mounting - Right	1	1
24	C	1081428-NLA	NLA - Hardware, Armrest Mounting - Left	1	1

NOTE: A - As of 1/3/02 upholstered waterfall armpads were replaced with black urethane waterfall armpads. Order in pairs with screws for chairs serviced before 1/3/02.
B - For Black Urethane Watefall Arm Pads only
C - Includes items 6, 7, 9 and 15-23

Armrest Assembly
Basic Recline 4XP or Tilt/Recline & Recline Only

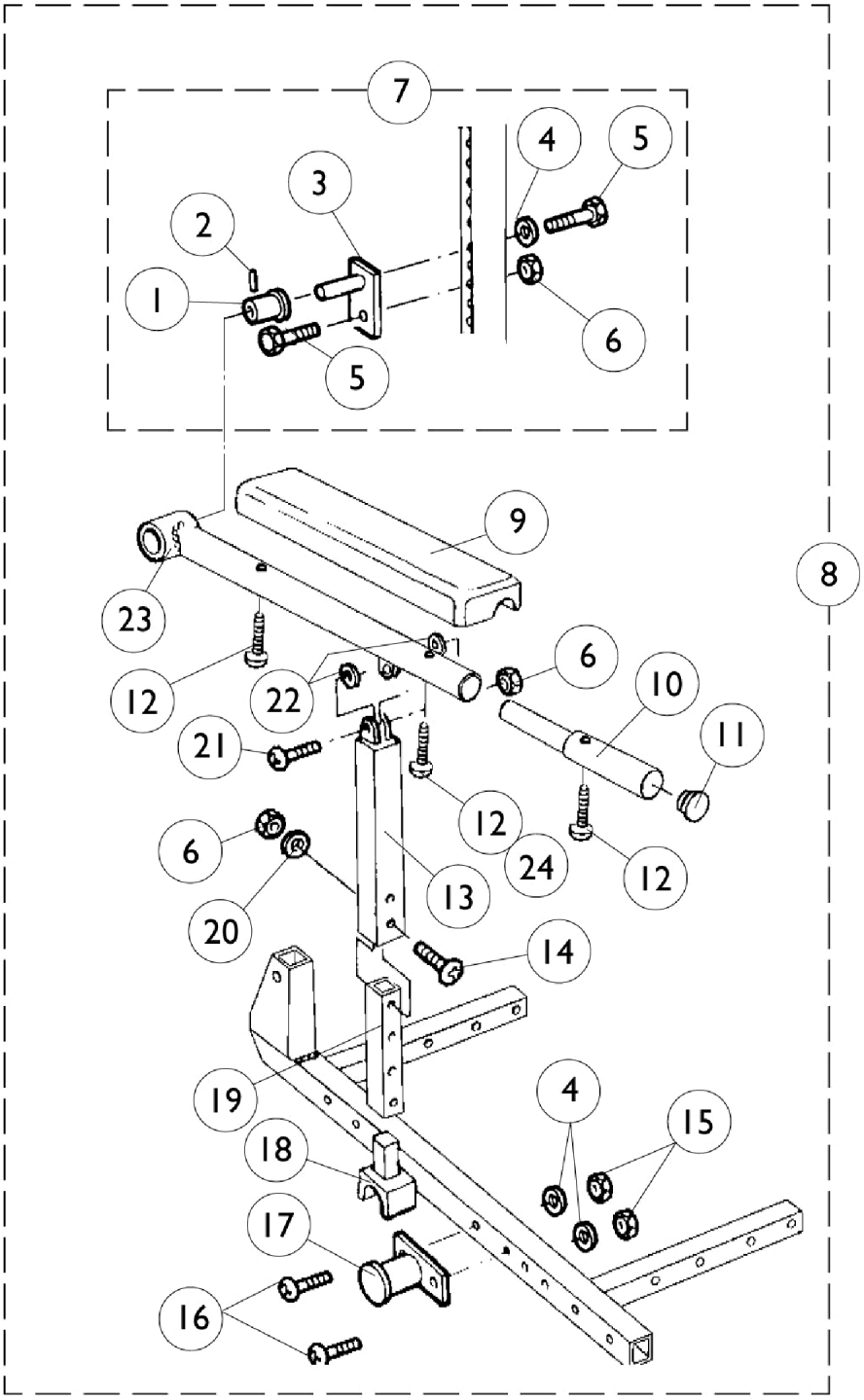

Armrest Assembly

Basic Recline 4XP or Tilt/Recline & Recline Only

Item Number	Note	Part Number	Description	Quantity Per Package	Quantity Per Assembly
1		0028101-NLA	NLA - Bushing, Arm	1	1
2		0061500-NLA	NLA - Pin, Roll (3/16 x 5/8")	1	1
3		0028502-NLA	NLA - Mounting Plate and Pin	1	1
4		0050406	Washer, Flat (1/4 x 5/8 x 1/16")	1	1
5		0053006-NLA	NLA - Screw, Hex Head (1/4-20 x 3/4")	1	2
6		7930333	Locknut (1/4-20)	25	3
7		0313800-NLA	NLA - Hardware, Pivot	1	1
8		1072819-NLA	NLA - Arm Assembly, w/ Arm Pad and Pivot Hardware, Full Length, Black - Right	1	1
8		1072820-NLA	NLA - Arm Assembly, w/ Arm Pad and Pivot Hardware, Full Length, Black - Left	1	1
8		1072817-NLA	NLA - Arm Assembly, w/ Arm Pad and Pivot Hardware, Desk Length, Black - Right	1	1
8		1072818-NLA	NLA - Arm Assembly, w/ Arm Pad and Pivot Hardware, Desk Length, Black - Left	1	1
9		0002600-NLA	NLA - Pad, Arm, Full Length (14" L x 3" W)	1	1
9		0002500-NLA	NLA - Pad, Arm, Desk Length (10" L x 3" W)	1	1
10		0028202	Tube, Extension, Full Length	1	1
11		1027095	Plug Button, Black (7/8")	1	1
12		0066306-NLA	NLA - Screw, Phillips Pan Head (#10-32 x 1-1/2")	1	1
13		0028902-NLA	NLA - Tube, Upper Support	1	1
14		0051206-NLA	NLA - Screw, Machine, Hex Socket, Button Head (1/4-20 x 1-1/4)	1	1
15		7930323-NLA	NLA - Package, Locknut (1/4-20)	25	2
16		0051406-NLA	NLA - Screw, Machine, Hex Socket, Flat Head (1/4 x 1-3/4")	1	2
17		0028402-NLA	NLA - Support, Armrest	1	1
18		0064100-NLA	NLA - Block, Glide	1	1
19		0028302-NLA	NLA - Tube, Lower Support	1	1
20		0050506-NLA	NLA - Lockwasher, High Collar, Split (1/4")	1	1
21		0051606-NLA	NLA - Screw, Cap, Button Head, Socket (1/4-20 x 1")	1	1
22		0050100-NLA	NLA - Washer, Nylon Flat (1/4 x 1/2 x 1/16")	1	2
23		0028802-NLA	NLA - Tube, Armrest - Right	1	1
23		0028702-NLA	NLA - Tube, Armrest, Black - Left	1	1
24	A	0065706	Screw, Phillips Pan Head Tap (#10-16 x 3/4")	1	1

NOTE: A - Item number 24 is used with full length armpads only. Desk length armpads use item number 12 in this position.

A.B.S. Curved Back Assembly

Basic Tilt & Tilt Only

NOTE: Hook Fastener Adhesive Kit must be ordered when a Back Pan or Back Assembly is requested. This will allow the Loop Fastener Adhesive on the Back Cover to attach properly.

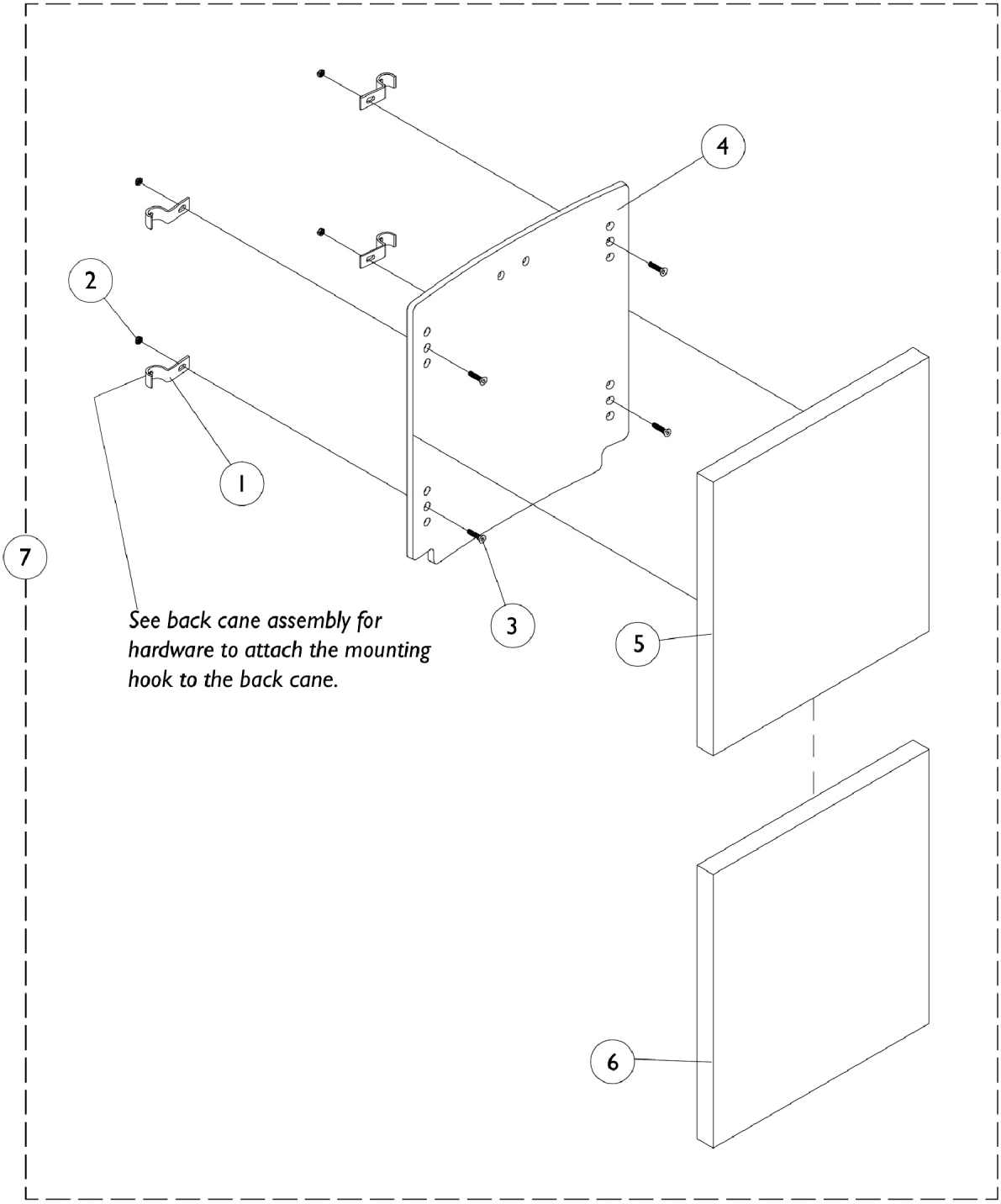

A.B.S. Curved Back Assembly

Basic Tilt & Tilt Only

NOTE: Hook Fastener Adhesive Kit must be ordered when a Back Pan or Back Assembly is requested. This will allow the Loop Fastener Adhesive on the Back Cover to attach properly.

Item Number	Note	Part Number	Description	Quantity Per	
				Package	Assembly
1		0124202	Hook, Back Assembly Mounting	1	4
2		7930333	Locknut (1/4-20)	25	4
3		1029545	Screw, Socket Flat Head (1/4-20 x 3/4")	1	4
4-7		See Chart	#'s 4-7 A.B.S. Curved Back Assembly	1	1
	A,E	1125723	Kit, Hook Fastener w/ Adhesive Back	1	1
	A,B	0143900-NLA	NLA - Flap, Back Pan - Tarsys	1	1
	A,C	0144000-NLA	NLA - Flap, Back Pan - Tarsys	1	1
	A,D	0144100-NLA	NLA - Flap, Back Pan - Tarsys	1	1

NOTE:
A - Not Shown
B - 16"-17" Wide
C - 18"-19" Wide
D - 20"-24" Wide
E - Hook Fastener Adhesive Kit is used to attach the Back Cover to the Back Pan and must be ordered when a new Back Pan or Back Assembly is requested.

Material Back Width x Height	Overall Back Height	Item #4 1" Back Pan	Item #5 Back Foam	Item #6 Back Assembly Cover	Item #7 w/ Fixed Hardware
14" x 16"	18"-19"H	0048819-NLA	1073070	0010821-NLA	1073098-NLA
15" x 16"	18"-19"H	0048919-NLA	1073077-NLA	0011021-NLA	1073099
16" x 16"	18"-19" H	0049019-NLA	0009720	0011221-NLA	1072790-NLA
17" x 16"	18"-19"H	0049119	0009920-NLA	0011421-NLA	1072791
18" x 16"	18"-19"H	0049219-NLA	0010120-NLA	0011621-NLA	1072792-NLA
19" x 16"	18"-19"H	0049319	0010320-NLA	0011821-NLA	1072793
20" x 16"	18"-19"H	0049419-NLA	0009820-NLA	0012021-NLA	1072794-NLA
21" x 16"	18"-19"H	0049519-NLA	1073078	0304021-NLA	1073100
22" x 16"	18"-19"H	0049619	1073079	0164421-NLA	1073101
23" x 16"	18"-19"H	Special	Special	Special	Special
24" x 16"	18"-19"H	Special	Special	Special	Special
14" x 18"	20"-22"H	1073064-NLA	1073071-NLA	1073093	1073102
15" x 18"	20"-22"H	1073065-NLA	1073081-NLA	1077077	1073103
16" x 18"	20"-22"H	0118819-NLA	0010120-NLA	0124321-NLA	1072795-NLA
17" x 18"	20"-22"H	0118919-NLA	0126720-NLA	0124421-NLA	1072796-NLA
18" x 18"	20"-22"H	0119019-NLA	0126820-NLA	0124521-NLA	1072797-NLA
19" x 18"	20"-22"H	0119119-NLA	0126920	8881024621-NLA	1072798-NLA
20" x 18"	20"-22"H	0119219-NLA	0010220-NLA	0124721-NLA	1072799-NLA
21" x 18"	20"-22"H	0119319-NLA	1073083-NLA	0304121-NLA	1073104-NLA
22" x 18"	20"-22"H	0119419	1073084-NLA	0304321-NLA	1073105
23" x 18"	20"-22"H	Special	Special	Special	Special
24" x 18"	20"-22"H	Special	Special	Special	Special

A.B.S. Curved Back Assembly

Basic Tilt & Tilt Only

NOTE: Hook Fastener Adhesive Kit must be ordered when a Back Pan or Back Assembly is requested. This will allow the Loop Fastener Adhesive on the Back Cover to attach properly.

Material Back Width x Height	Overall Back Height	Item #4 1" Back Pan	Item #5 Back Foam	Item #6 Back Assembly Cover	Item #7 w/ Fixed Hardware
14" x 20"	23"-25"H	1073066-NLA	1073073	0010921-NLA	1073106
15" x 20"	23"-25"H	1073067-NLA	1073086-NLA	0011121-NLA	1073107
16" x 20"	23"-25"H	0125319-NLA	0009820-NLA	0011321-NLA	1072800-NLA
17" x 20"	23"-25"H	0125419-NLA	0010020-NLA	0011521-NLA	1072801
18" x 20"	23"-25"H	0125519-NLA	0010220-NLA	0011721-NLA	1072802-NLA
19" x 20"	23"-25"H	0125619-NLA	0010420	0011921-NLA	1072803-NLA
20" x 20"	23"-25"H	0125719	0010620-NLA	0012121-NLA	1072804-NLA
21" x 20"	23"-25"H	0125819	1073087-NLA	0304221-NLA	1073108
22" x 20"	23"-25"H	0125919-NLA	1073088-NLA	0158721-NLA	1073109-NLA
23" x 20"	23"-25"H	Special	Special	Special	Special
24" x 20"	23"-25"H	Special	Special	Special	Special
NOTE: Some foam size part numbers can accommodate two width and two back heights by turning the foam around 90 degrees. Example would be a (16" W x 20" H) can be (20" W x 16" H) in other applications.					

A.B.S. Curved Back Assembly
Basic Recline (4XP)

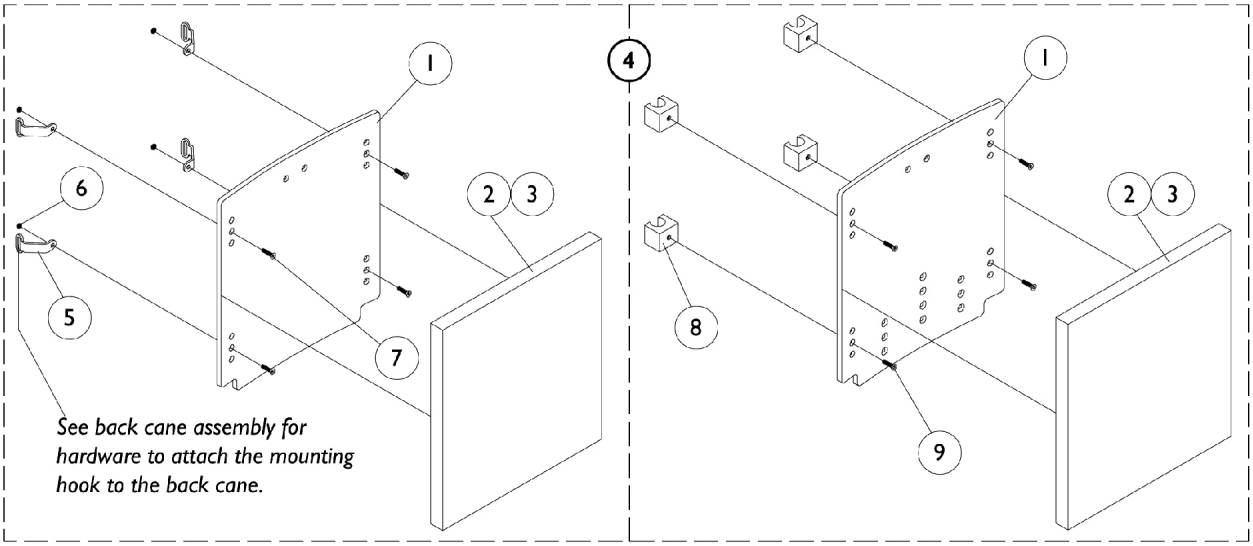

Material Back Width x Height	Overall Back Height	Item #1 Back Pan	Item #2 1" Back Foam	Item #3 Back Cover	Item #4 Back Asbly w/Fixed Hdwr
16" x 20"	24" Fixed	0125319-NLA	0009820-NLA	0011321-NLA	1072873-NLA
18" x 20"	24" Fixed	0125519-NLA	0010220-NLA	0011721-NLA	1072875-NLA
NOTE: Some foam size part numbers can accommodate two width and two back heights by turning the foam around 90 degrees. Example would be a (16" W x 20" H) can be (20" W x 16" H) in other applications.					

A.B.S. Curved Back Assembly

Basic Recline (4XP)

Basic Recline (4XP)-MSR

Material Back Width x Height	Overall Back Height	Item #1 Back Pan	Item #2 1" Back Foam	Item #3 Back Cover	Item #4 Back Asbly w/Sliding Hdwr
16" x 14"	21"-22"H	0129019-NLA	1073070	0124821-NLA	1077097
18" x 14"	21"-22"H	0129219-NLA	1073071-NLA	0125021-NLA	1077099-NLA
16" x 16"	23"-25"H	0049019-NLA	0009720	0011221-NLA	1072878
18" x 16"	23"-25"H	0049219-NLA	0010120-NLA	0011621-NLA	1072880-NLA

NOTE: Some foam size part numbers can accommodate two width and two back heights by turning the foam around 90 degrees. Example would be a (16" W x 20" H) can be (20" W x 16" H) in other applications.

Item Number	Note	Part Number	Description	Quantity Per	
				Package	Assembly
1-4		See Chart	#'s 1-4 Basic Recline (4XP)	1	1
1-4		See Chart	#'s 1-4 Basic Recline (4XP)-MSR	1	1
5		0029002-NLA	NLA - Bracket, Non-Sliding Back Pan Mounting	1	4
6		7930323-NLA	NLA - Package, Locknut (1/4-20)	25	4
7		1029545	Screw, Socket Flat Head (1/4-20 x 3/4")	1	4
8		0047800-NLA	NLA - Block, Glide	1	4
9		0052906-NLA	NLA - Screw, Socket Button Head (1/4-20 x 3/4")	1	4
	A,D	1125723	Kit, Hook Fastener w/ Adhesive Back	1	1
	A,B	0230200-NLA	NLA - Flap, Back Pan - Tarsys	1	1
	A,C	0230300-NLA	NLA - Flap, Back Pan - Tarsys	1	1

NOTE: A - Not Shown
B - 16" Wide
C - 18" Wide
D - Hook Fastener Adhesive Kit is used to attach the Back Cover to the Back Pan and must be ordered when a new Back Pan or Back Assembly is requested.

A.B.S. Curved Back Assembly

Recline, Fixed Back (Non-VSR)
Tilt/Recline and Recline Only

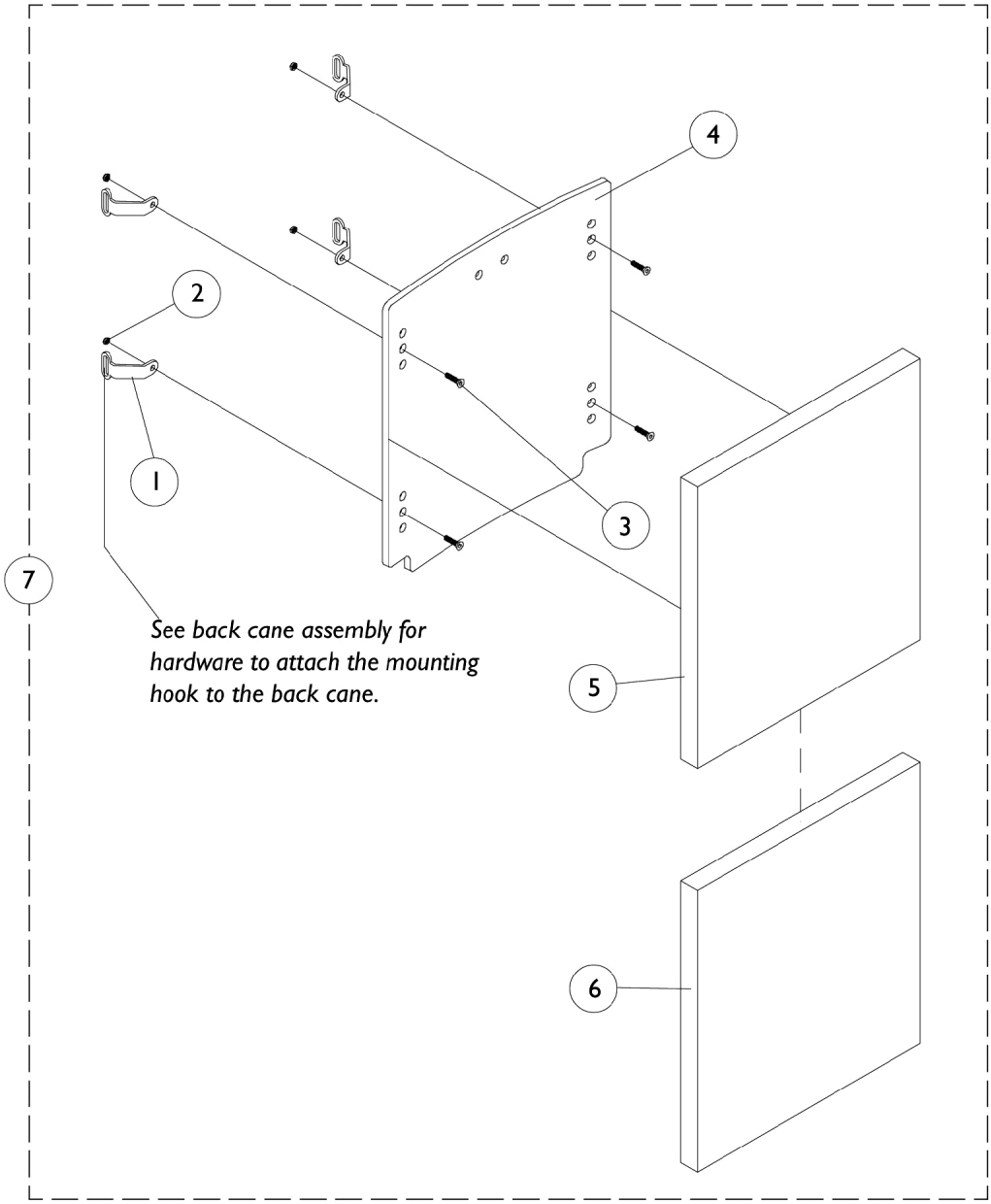

A.B.S. Curved Back Assembly
Recline, Fixed Back (Non-VSR)
Tilt/Recline and Recline Only

Item Number	Note	Part Number	Description	Quantity Per	
				Package	Assembly
1		0029002-NLA	NLA - Bracket, Non-Sliding Back Pan Mounting	1	4
2		7930323-NLA	NLA - Package, Locknut (1/4-20)	25	4
3		1029545	Screw, Socket Flat Head (1/4-20 x 3/4")	1	4
4-7		See Chart	#'s 4-7 A.B.S. Curved Back Assembly	1	1
	A,E	1125723	Kit, Hook Fastener w/ Adhesive Back	1	1
	A,B	0143900-NLA	NLA - Flap, Back Pan - Tarsys	1	1
	A,C	0144000-NLA	NLA - Flap, Back Pan - Tarsys	1	1
	A,D	0144100-NLA	NLA - Flap, Back Pan - Tarsys	1	1

NOTE: A - Not Shown.
B - 16"-17" Wide
C - 18"-19" Wide
D - 20"-24" Wide
E - Hook Fastener Adhesive Kit is used to attach the Back Cover to the Back Pan and must be ordered when a new Back Pan or Back Assembly is requested.

Material Back Width x Height	Overall Back Height	Item #4 1" Back Pan	Item #5 Back Foam	Item #6 Back Assembly Cover	Item #7 w/Fixed Hardware
14" x 18"	20"-22"H	1073064-NLA	1073071-NLA	1073093	1077087
15" x 18"	20"-22"H	1073065-NLA	1073081-NLA	1077077	1077088-NLA
16" x 18"	20"-22"H	0118819-NLA	0010120-NLA	0124321-NLA	1072868-NLA
17" x 18"	20"-22"H	0118919-NLA	0126720-NLA	0124421-NLA	1072869
18" x 18"	20"-22"H	0119019-NLA	0126820-NLA	0124521-NLA	1072870
19" x 18"	20"-22"H	0119119-NLA	0126920	0124621-NLA	1072871-NLA
20" x 18"	20"-22"H	0119219-NLA	0010220-NLA	0124721-NLA	1072872-NLA
21" x 18"	20"-22"H	0119319-NLA	1073083-NLA	0304121-NLA	1077089-NLA
22" x 18"	20"-22"H	0119419	1073084-NLA	0304321-NLA	1077090-NLA
23" x 18"	20"-22"H	Special	Special	Special	Special
24" x 18"	20"-22"H	Special	Special	Special	Special
14" x 20"	23"-25"H	1073066-NLA	1073073	0010921-NLA	1077091-NLA
15" x 20"	23"-25"H	1073067-NLA	1073086-NLA	0011121-NLA	1077092
16" x 20"	23"-25"H	0125319-NLA	0009820-NLA	0011321-NLA	1072873-NLA
17" x 20"	23"-25"H	0125419-NLA	0010020-NLA	0011521-NLA	1072874-NLA
18" x 20"	23"-25"H	0125519-NLA	0010220-NLA	0011721-NLA	1072875-NLA
19" x 20"	23"-25"H	0125619-NLA	0010420	0011921-NLA	1072876
20" x 20"	23"-25"H	0125719	0010620-NLA	0012121-NLA	1072877

A.B.S. Curved Back Assembly
Recline, Fixed Back (Non-VSR)
Tilt/Recline and Recline Only

Material Back Width x Height	Overall Back Height	Item #4 1" Back Pan	Item #5 Back Foam	Item #6 Back Assembly Cover	Item #7 w/Fixed Hardware
21" x 20"	23"-25"H	0125819	1073087-NLA	0304221-NLA	1077093
22" x 20"	23"-25"H	0125919-NLA	1073088-NLA	0158721-NLA	1077094
23" x 20"	23"-25"H	Special	Special	Special	Special
24" x 20"	23"-25"H	Special	Special	Special	Special
NOTE: Some foam size part numbers can accommodate two width and two back heights by turning the foam around 90 degrees. Example would be a (16" W x 20" H) can be (20" W x 16" H) in other applications.					

A.B.S. Curved Back Assembly

Recline, Sliding Back (VSR)
Tilt/Recline and Recline Only

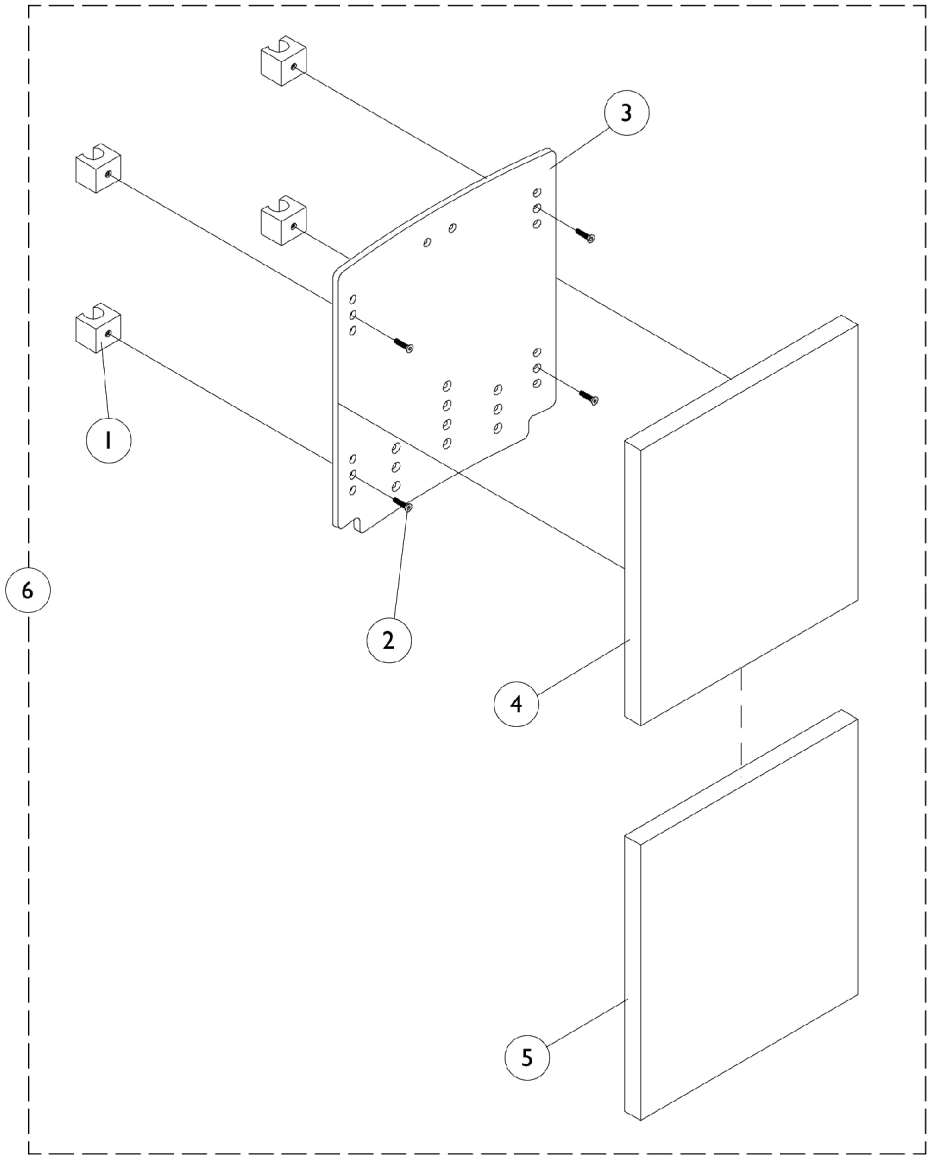

A.B.S. Curved Back Assembly
Recline, Sliding Back (VSR)
Tilt/Recline and Recline Only

Item Number	Note	Part Number	Description	Quantity Per Package	Quantity Per Assembly
1		0047800-NLA	NLA - Block, Glide	1	4
2		0052906-NLA	NLA - Screw, Socket Button Head (1/4-20 x 3/4")	1	4
3-6		See Chart	#'s 3-6 A.B.S. Curved Back Assembly	1	1
	A,E	1125723	Kit, Hook Fastener w/ Adhesive Back	1	1
	A,B	0143900-NLA	NLA - Flap, Back Pan - Tarsys	1	1
	A,C	0144000-NLA	NLA - Flap, Back Pan - Tarsys	1	1
	A,D	0144100-NLA	NLA - Flap, Back Pan - Tarsys	1	1

NOTE: A - Not Shown
B - 16"-17" Wide
C - 18"-19" Wide
D - 20"-24" Wide
E - Hook Fastener Adhesive Kit is used to attach the Back Cover to the Back Pan and must be ordered when a new Back Pan or Back Assembly is requested.

Material Back Width x Height	Overall Back Height	Item #3 Back Pan	Item #4 1" Back Foam	Item #5 Back Cover	Item #6 Back Asbly w/Sliding Hdwr
14" X 14"	21"-22"H	0128819	1073068	1073089-NLA	1077095
15" x 14"	21"-22"H	0128919-NLA	1073069	1073090-NLA	1077096-NLA
16" x 14"	21"-22"H	0129019-NLA	1073070	0124821-NLA	1077097
17" x 14"	21"-22"H	0129119	0310820-NLA	0124921-NLA	1077098
18" x 14"	21"-22"H	0129219-NLA	1073071-NLA	0125021-NLA	1077099-NLA
19" x 14"	21"-22"H	0129319-NLA	1073072-NLA	0125121-NLA	1077100-NLA
20" x 14"	21"-22"H	0129419-NLA	1073073	0125221-NLA	1077101-NLA
21" x 14"	21"-22"H	0129519	1073074	1073091-NLA	1077102
22" x 14"	21"-22"H	0129619-NLA	1073075	1073092-NLA	1077103-NLA
23" x 14"	21"-22"H	Special	Special	Special	Special
24" x 14"	21"-22"H	Special	Special	Special	Special
14" x 16"	23"-25"H	0048819-NLA	1073070	0010821-NLA	1077104-NLA
15" x 16"	23"-25"H	0048919-NLA	1073077-NLA	0011021-NLA	1077105-NLA
16" x 16"	23"-25"H	0049019-NLA	0009720	0011221-NLA	1072878
17" x 16"	23"-25"H	0049119	0009920-NLA	0011421-NLA	1072879

A.B.S. Curved Back Assembly
Recline, Sliding Back (VSR)
Tilt/Recline and Recline Only

Material Back Width x Height	Overall Back Height	Item #3 Back Pan	Item #4 1" Back Foam	Item #5 Back Cover	Item #6 Back Asbly w/Sliding Hdwr
18" x 16"	23"-25"H	0049219-NLA	0010120-NLA	0011621-NLA	1072880-NLA
19" x 16"	23"-25"H	0049319	0010320-NLA	0011821-NLA	1072881
20" x 16"	23"-25"H	0049419-NLA	0009820-NLA	0012021-NLA	1072882-NLA
21" x 16"	23"-25"H	0049519-NLA	1073078	0304021-NLA	1077106-NLA
22" x 16"	23"-25"H	0049619	1073079	0164421-NLA	1077107
23" x 16"	23"-25"H	Special	Special	Special	Special
24" x 16"	23"-25"H	Special	Special	Special	Special
NOTE: Some foam size part numbers can accommodate two width and two back heights by turning the foam around 90 degrees. Example would be a (16" W x 20" H) can be (20" W x 16" H) in other applications.					

Profile Back Assembly
Fixed
Basic Tilt & Tilt Only

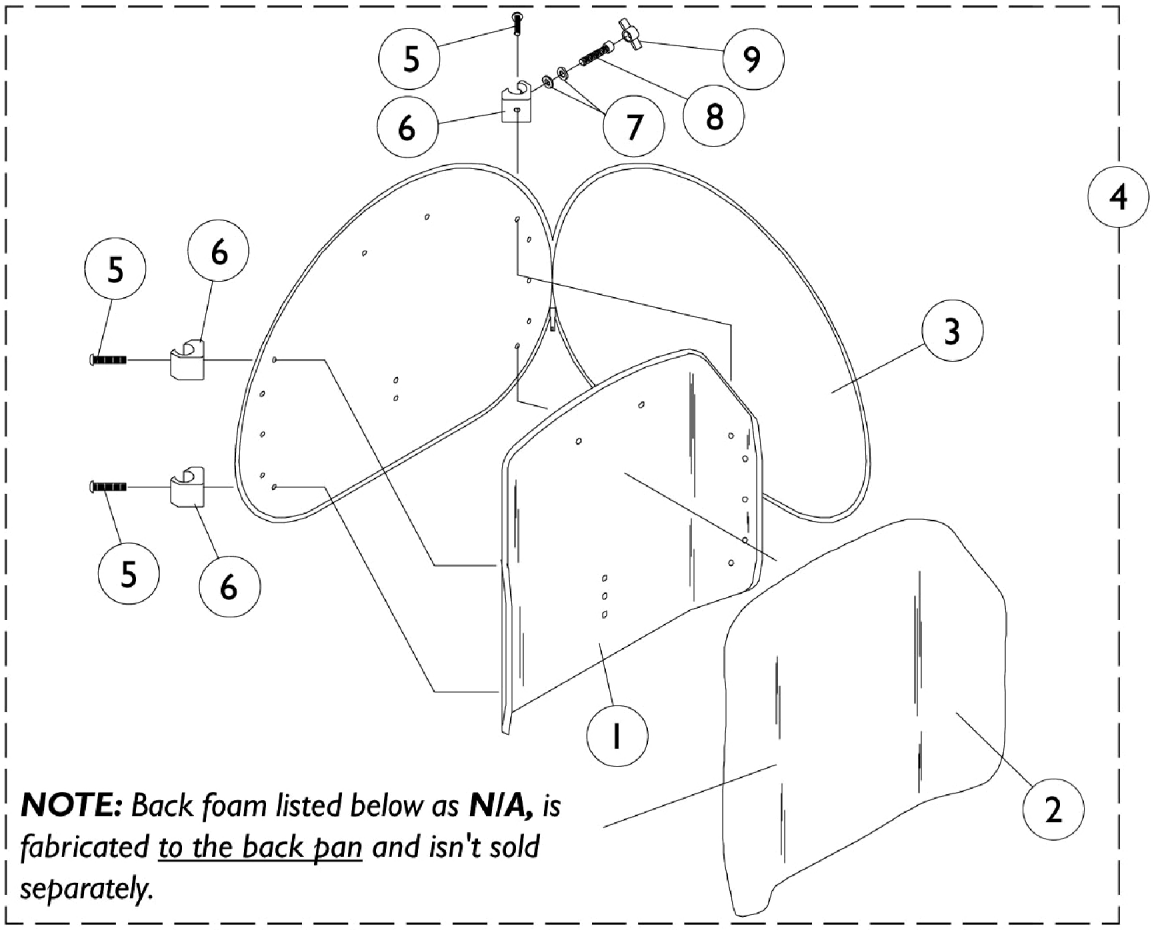

Profile Back Assembly
Fixed
Basic Tilt & Tilt Only

Material Back Width x Height	Overall Back Height	Item #1 Back Pan	Item #2 Back Foam	Item #3 Back Cover	Item #4 Back Asbly w/Fixed Hdwr
16" x 16"	20"-21"H	0133019-NLA	0259220-NLA	0276800-NLA	1072912-NLA
17" x 16"	20"-21"H	0133019-NLA	0259220-NLA	0276800-NLA	1072913-NLA
18" x 16"	20"-21"H	0133119-NLA	0259120-NLA	0276900-NLA	1072914-NLA
19" x 16"	20"-21"H	0133119-NLA	0259120-NLA	0276900-NLA	1072915-NLA
20" x 16"	20"-21"H	0133219-NLA	N/A	0277000-NLA	1072916-NLA
16" x 18"	22"-24"H	0133319-NLA	N/A	0277100	1072917-NLA
17" x 18"	22"-24"H	0133319-NLA	N/A	0277100	1072918-NLA
18" x 18"	22"-24"H	0133419-NLA	0259020-NLA	0277200	1072919-NLA
19" x 18"	22"-24"H	0133419-NLA	0259020-NLA	0277200	1072920-NLA
20" x 18"	22"-24"H	0133519	N/A	0277300-NLA	1072921-NLA

Profile Back Assembly
Fixed
Basic Tilt & Tilt Only

Item Number	Note	Part Number	Description	Quantity Per	
				Package	Assembly
1-4		See Chart	#'s 1-4 Profile Back Assembly (Fixed)	1	1
5	B	0052906-NLA	NLA - Screw, Socket Button Head (1/4-20 x 3/4")	1	4
5	C	0051206-NLA	NLA - Screw, Machine, Hex Socket, Button Head (1/4-20 x 1-1/4)	1	4
6		0190500-NLA	NLA - Block, Glide (16", 18" and 20" Wide)	1	4
6		0190600-NLA	NLA - Block, Glide (17" and 19" Wide)	1	4
7		0050100-NLA	NLA - Washer, Nylon Flat (1/4 x 1/2 x 1/16")	1	4
8		7930304-NLA	NLA - Screw, Socket Head (1/4-20 x 1-1/4")	25	2
9		0226500-NLA	NLA - Knob, Tee	1	2
	A,D	0143900-NLA	NLA - Flap, Back Pan - Tarsys	1	1
	A,E	0144000-NLA	NLA - Flap, Back Pan - Tarsys	1	1
	A,F	0144100-NLA	NLA - Flap, Back Pan - Tarsys	1	1

NOTE:
A - Not Shown
B - 16"/18"/20" Wide
C - 17"/19" Wide
D - 16"-17" Wide
E - 18"-19" Wide
F - 20" Wide

Profile Back Assembly
Fixed, Non-VSR

Tilt/Recline and Recline Only

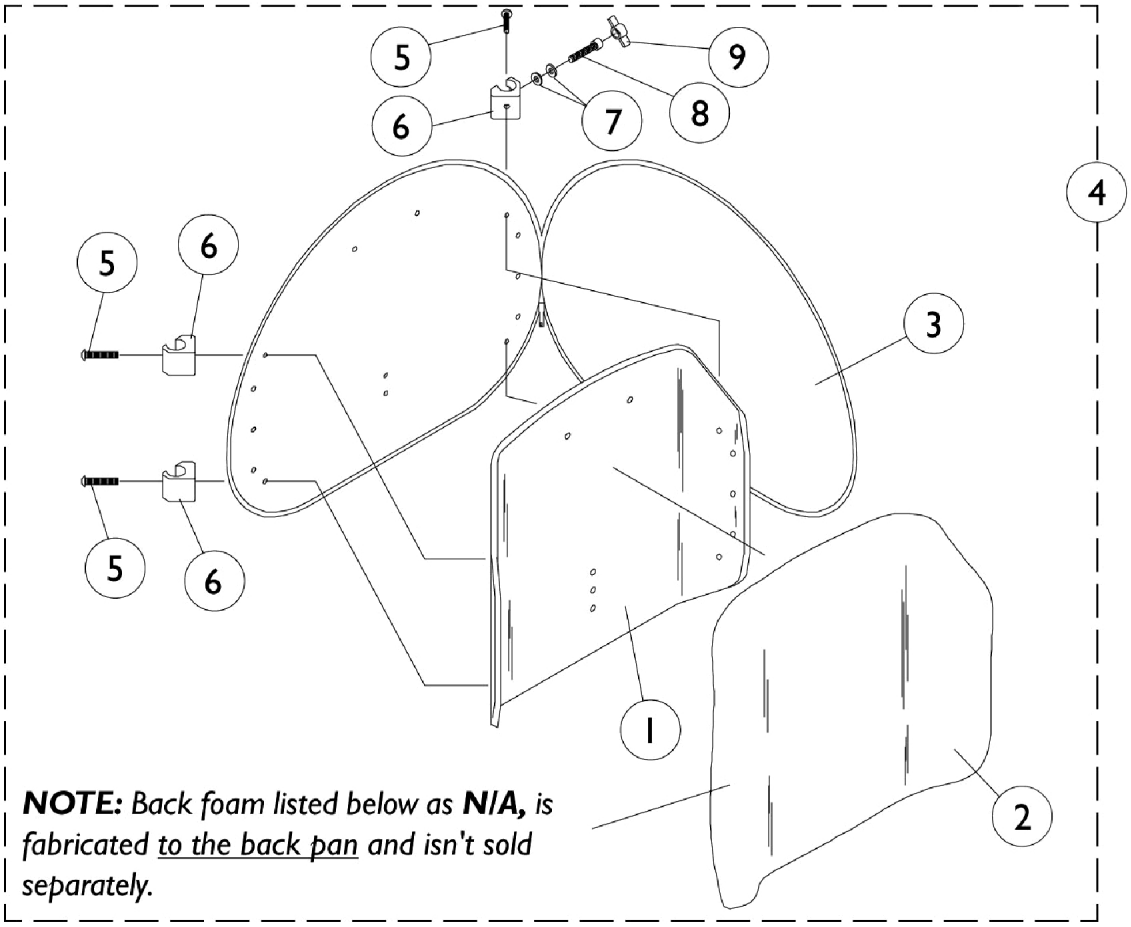

Profile Back Assembly
Fixed, Non-VSR

Tilt/Recline and Recline Only

Material Back Width x Height	Overall Back Height	Item #1 Back Pan	Item #2 Back Foam	Item #3 Back Cover	Item #4 Back Assembly w/Fixed Hdwr
16" x 16"	21"H	0133019-NLA	0259220-NLA	0276800-NLA	1072912-NLA
17" x 16"	21"H	0133019-NLA	0259220-NLA	0276800-NLA	1072913-NLA
18" x 16"	21"H	0133119-NLA	0259120-NLA	0276900-NLA	1072914-NLA
19" x 16"	21"H	0133119-NLA	0259120-NLA	0276900-NLA	1072915-NLA
20" x 16"	21"H	0133219-NLA	N/A	0277000-NLA	1072916-NLA
16" x 18"	22"-25"H	0133319-NLA	N/A	0277100	1072917-NLA
17" x 18"	22"-25"H	0133319-NLA	N/A	0277100	1072918-NLA
18" x 18"	22"-25"H	0133419-NLA	0259020-NLA	0277200	1072919-NLA
19" x 18"	22"-25"H	0133419-NLA	0259020-NLA	0277200	1072920-NLA
20" x 18"	22"-25"H	0133519	N/A	0277300-NLA	1072921-NLA

Profile Back Assembly
Fixed, Non-VSR

Tilt/Recline and Recline Only

Item Number	Note	Part Number	Description	Quantity Per	
				Package	Assembly
1-4		See Chart	#'s 1-4 Profile Back Assembly (Fixed, Non-VSR)	1	1
5	B	0052906-NLA	NLA - Screw, Socket Button Head (1/4-20 x 3/4")	1	4
5	C	0051206-NLA	NLA - Screw, Machine, Hex Socket, Button Head (1/4-20 x 1-1/4)	1	4
6		0190500-NLA	NLA - Block, Glide (16", 18" and 20" Wide)	1	4
6		0190600-NLA	NLA - Block, Glide (17" and 19" Wide)	1	4
7		0050100-NLA	NLA - Washer, Nylon Flat (1/4 x 1/2 x 1/16")	1	4
8		7930304-NLA	NLA - Screw, Socket Head (1/4-20 x 1-1/4")	25	2
9		0226500-NLA	NLA - Knob, Tee	1	2
	A,D	0143900-NLA	NLA - Flap, Back Pan - Tarsys	1	1
	A,E	0144000-NLA	NLA - Flap, Back Pan - Tarsys	1	1
	A,F	0144100-NLA	NLA - Flap, Back Pan - Tarsys	1	1

NOTE:
A - Not Shown
B - 16"/18"/20" Wide
C - 17"/19" Wide
D - 16"-17" Wide
E - 18"-19" Wide
F - 20" Wide

Profile Back Assembly
Sliding, VSR
Tilt/Recline & Recline Only

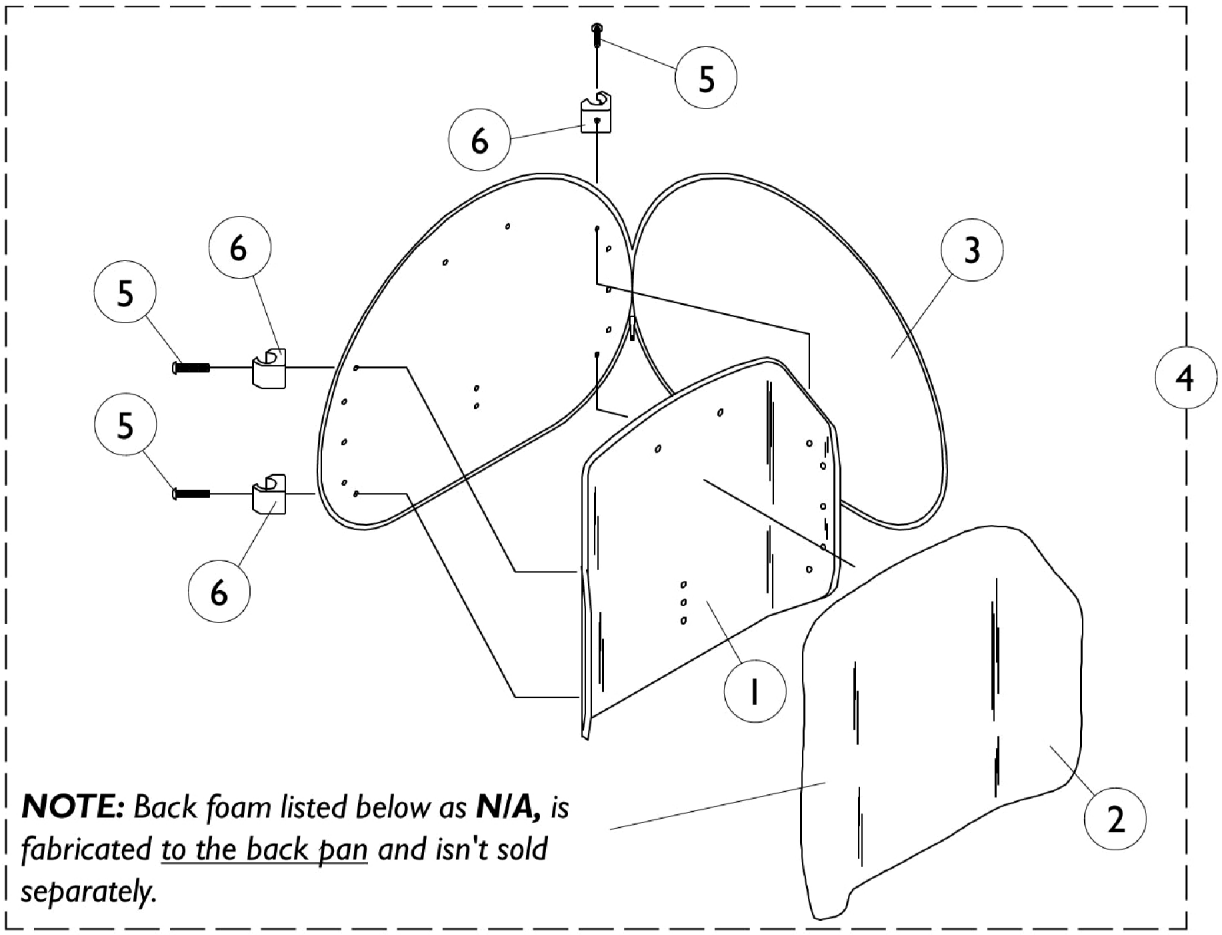

Profile Back Assembly
Sliding, VSR
Tilt/Recline & Recline Only

Material Back Width x Height	Overall Back Height	Item #1 Back Pan	Item #2 Back Foam	Item #3 Back Cover	Item #4 Back Assembly w/Sliding Hdwr
16" x 16"	23" x 24"H	0133019-NLA	0259220-NLA	0276800-NLA	0323200-NLA
17" x 16"	23" x 24"H	0133019-NLA	0259220-NLA	0276800-NLA	1072908-NLA
18" x 16"	23" x 24"H	0133119-NLA	0259120-NLA	0276900-NLA	0323300-NLA
19" x 16"	23" x 24"H	0133119-NLA	0259120-NLA	0276900-NLA	1072909-NLA
20" x 16"	23" x 24"H	0133219-NLA	N/A	0277000-NLA	0323400-NLA
16" x 18"	25"	0133319-NLA	N/A	0277100	0323500-NLA
17" x 18"	25"	0133319-NLA	N/A	0277100	1072910-NLA
18" x 18"	25"	0133419-NLA	0259020-NLA	0277200	0323600-NLA
19" x 18"	25"	0133419-NLA	0259020-NLA	0277200	1072911-NLA
20" x 18"	25"	0133519	N/A	0277300-NLA	0323700-NLA

Profile Back Assembly
Sliding, VSR
Tilt/Recline & Recline Only

Item Number	Note	Part Number	Description	Quantity Per	
				Package	Assembly
1-4		See Chart	#'s 1-4 Profile Back Assembly (Sliding, VSR)	1	1
5	B	0052906-NLA	NLA - Screw, Socket Button Head (1/4-20 x 3/4")	1	4
5	C	0051206-NLA	NLA - Screw, Machine, Hex Socket, Button Head (1/4-20 x 1-1/4)	1	4
6		0121200	Block, Glide (16"/18"/20" W)	1	4
6		0186400-NLA	NLA - Block, Glide (17"/19" W)	1	4
	A,D	0143900-NLA	NLA - Flap, Back Pan - Tarsys	1	1
	A,E	0144000-NLA	NLA - Flap, Back Pan - Tarsys	1	1
	A,F	0144100-NLA	NLA - Flap, Back Pan - Tarsys	1	1

NOTE:
A - Not Shown
B - 16"/18"/20" Wide
C - 17"/19" Wide
D - 16"-17" Wide
E - 18"-19" Wide
F - 20" Wide

Recessed Back Assembly
Sliding, VSR
Tilt/Recline & Recline Only

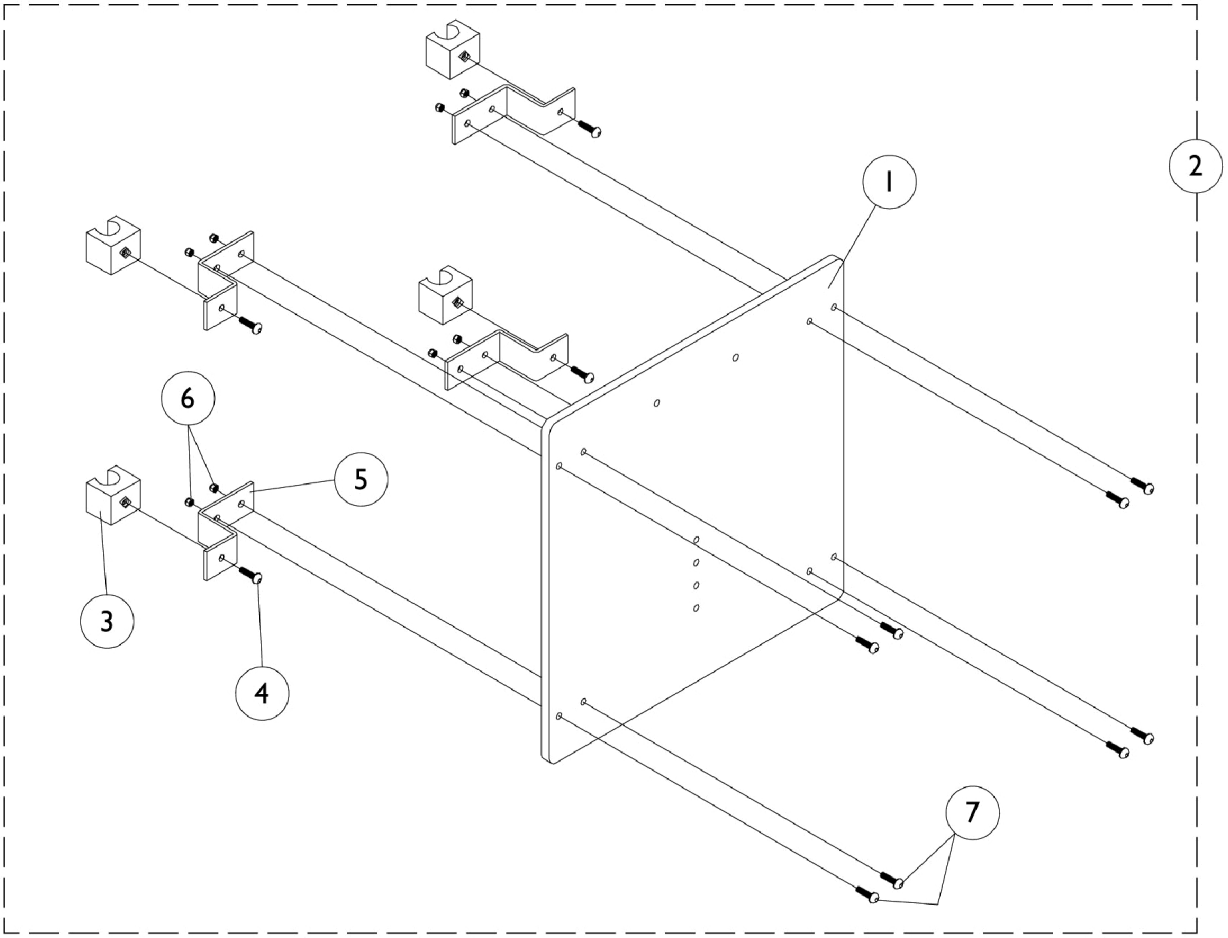

Recessed Back Assembly
Sliding, VSR
Tilt/Recline & Recline Only

Material Back Width x Height	Overall Back Height	Item #1 Back Pan	Item #2 Back Assembly w/ Sliding Hardware
14" x 15"	23"	0048019	0323800-NLA
15" x 15"	23"	0048119-NLA	0323900-NLA
16" x 15"	23"	0048219	0324000-NLA
17" x 15"	23"	0048319	0324100-NLA
18" x 15"	23"	0048419	0324200-NLA
19" x 15"	23"	0048519	0324300-NLA
20" x 15"	23"	0048619	0324400-NLA
21" x 15"	23"	Special	Special
22" x 15"	23"	Special	Special
23" x 15"	23"	Special	Special
24" x 15"	23"	Special	Special

Recessed Back Assembly
Sliding, VSR
Tilt/Recline & Recline Only

Item Number	Note	Part Number	Description	Quantity Per	
				Package	Assembly
1-2		See Chart	#'s 1-2 Recessed Back Assembly (Sliding, VSR)	1	1
3		0047800-NLA	NLA - Block, Glide	1	4
4		0223506-NLA	NLA - Screw, Socket, Cap, Button Head (1/4-20 x 1/2")	1	4
5		0047902	Hook, Mounting	1	4
6		7930323-NLA	NLA - Package, Locknut (1/4-20)	25	8
7		0052906-NLA	NLA - Screw, Socket Button Head (1/4-20 x 3/4")	1	8
	A,B	0143900-NLA	NLA - Flap, Back Pan - Tarsys	1	1
	A,C	0144000-NLA	NLA - Flap, Back Pan - Tarsys	1	1

NOTE: A - Not Shown
B - 16"-19" Wide
C - 20"-24" Wide

Mechanical Shear Reduction Linkage
M.S.R.
Basic Recline 4XP

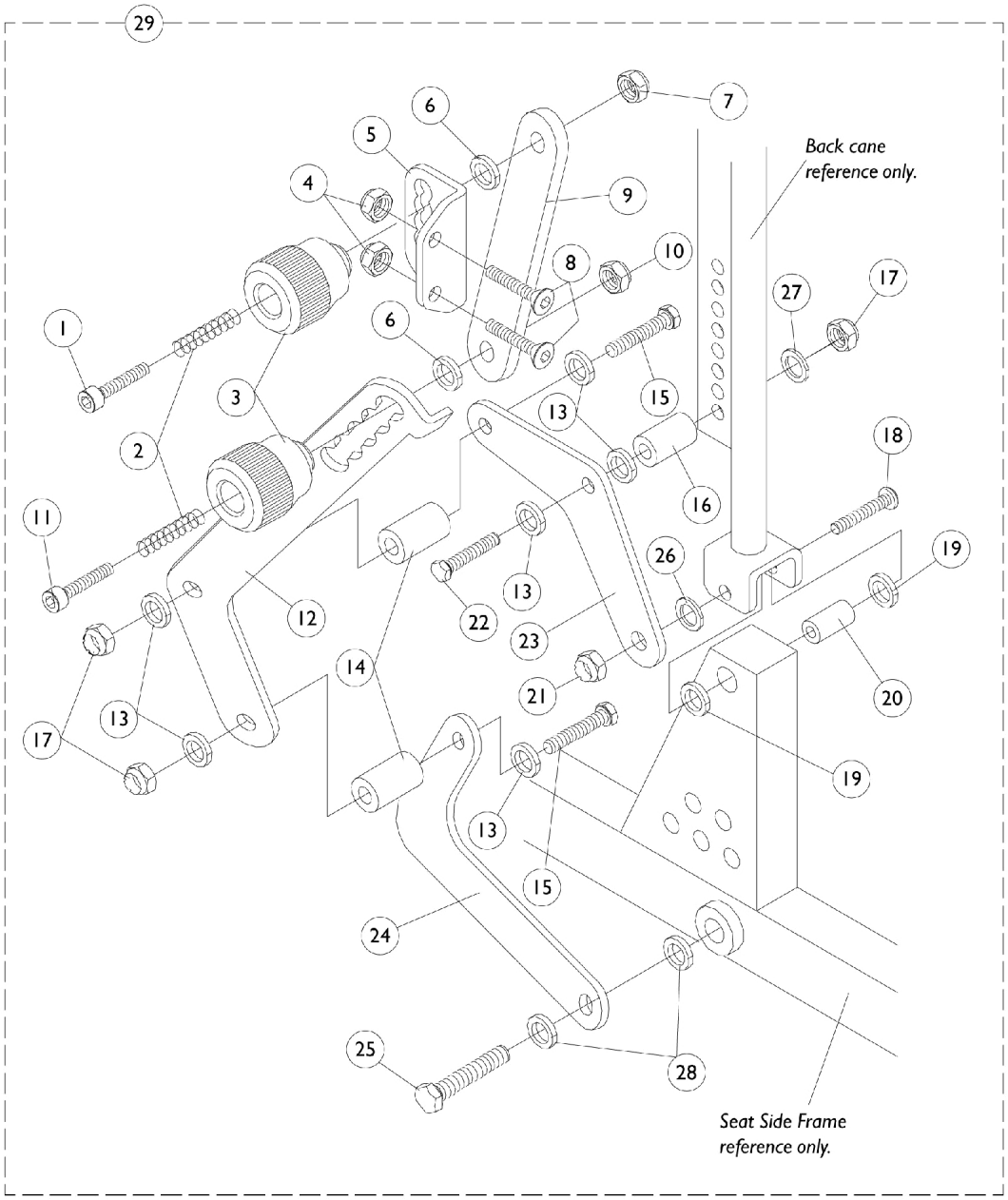

Mechanical Shear Reduction Linkage
M.S.R.
Basic Recline 4XP

Item Number	Note	Part Number	Description	Quantity Per	
				Package	Assembly
1		0258406-NLA	NLA - Screw, Socket Head, Cap (#10-32 x 1-1/4")	1	1
2		0146500-NLA	NLA - Spring, Compression (1/32 WT x 15/16" L)	1	2
3		0146622-NLA	NLA - Knob, MSR Adjustment	1	2
4		7930323-NLA	NLA - Package, Locknut (1/4-20)	25	2
5		0149624-NLA	NLA - Bracket, MSR Back Pan, Black	1	1
6		0146700-NLA	NLA - Washer, Nylon (3/16 x 5/8 x 1/16")	1	2
7		7930332-NLA	NLA - Locknut, High Profile (#10-32)	25	1
8		0195606-NLA	NLA - Screw, Socket, Cap, Flat Head (1/4-20 x 3/4")	1	2
9		0148806-NLA	NLA - Link, Upper Adjustment, Black	1	1
10		317601-NLA	NLA - Locknut, Low Profile (#10-32)	1	1
11		0149506-NLA	NLA - Screw, Socket Head, Hex (#10-32 x 1")	1	1
12		0175524-NLA	NLA - Link, Lower Adjustment, Black - Right	1	1
12		0175424-NLA	NLA - Link, Lower Adjustment, Black - Left	1	1
13		0050100-NLA	NLA - Washer, Nylon Flat (1/4 x 1/2 x 1/16")	1	6
14		0216901-NLA	NLA - Bushing, Upper/ Lower	1	2
15		0052606-NLA	NLA - Screw, Hex Head (1/4-20 x 2")	1	2
16		0146422-NLA	NLA - Spacer, Leg Link	1	1
17		7930333	Locknut (1/4-20)	25	3
18		0055506-NLA	NLA - Screw, Button Head, Socket (5/16-18 x 2")	1	1
19		0055800-NLA	NLA - Washer, Nylon (7/16 x 3/4 x 3/32")	1	2
20		0060300-NLA	NLA - Bushing, Bronze (5/16 x 7/16 x 1-1/4")	1	1
21		0055006-NLA	NLA - Locknut, Low Profile (5/16-18)	1	1
22		0051006-NLA	NLA - Screw, Hex Head Full Thread (1/4-20 x 1-1/2")	1	1
23		0217224-NLA	NLA - Link, MSR Back Post Lower, Black	1	1
24		0165424-NLA	NLA - Link, MSR Lower, Black	1	1
25		0139606-NLA	NLA - Screw, Hex Head (5/16-18 x 1")	1	1
26		0054806-NLA	NLA - Washer, Flat (11/32 x 11/16 x 1/16")	1	1
27		0050406	Washer, Flat (1/4 x 5/8 x 1/16")	1	1
28		0054700-NLA	NLA - Washer, Nylon (5/16 x 1/2 x 1/16")	1	2
29		1077512	Mechanical Shear Reduction Linkage Assembly - Right	1	1
29		Mechanical	Mechanical Shear Reduction Linkage Assembly - Left	1	1

Motor Actuators
Tilt, Recline and V.S.R.
Tilt/Recline and Recline Only

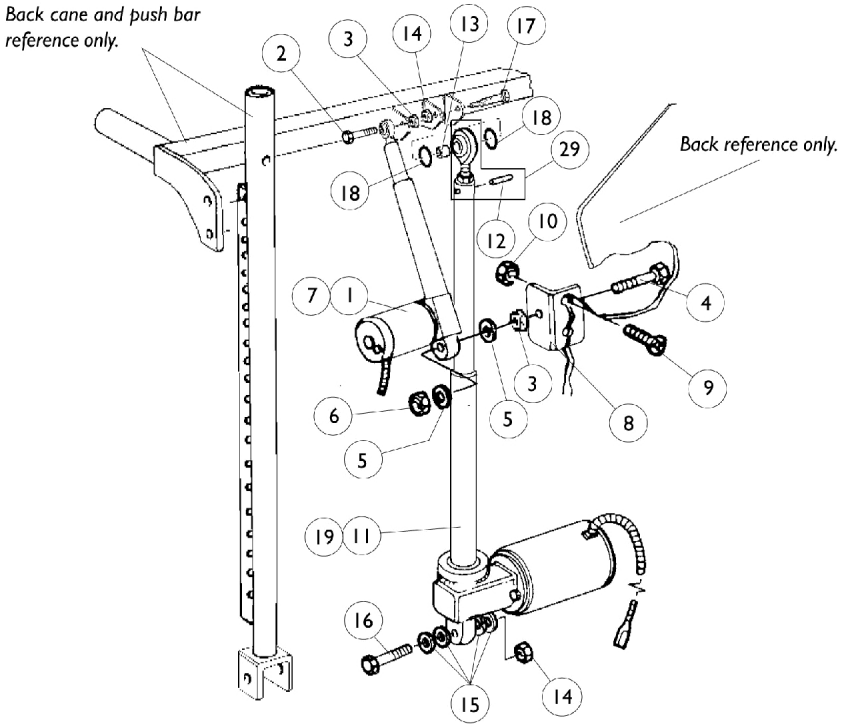

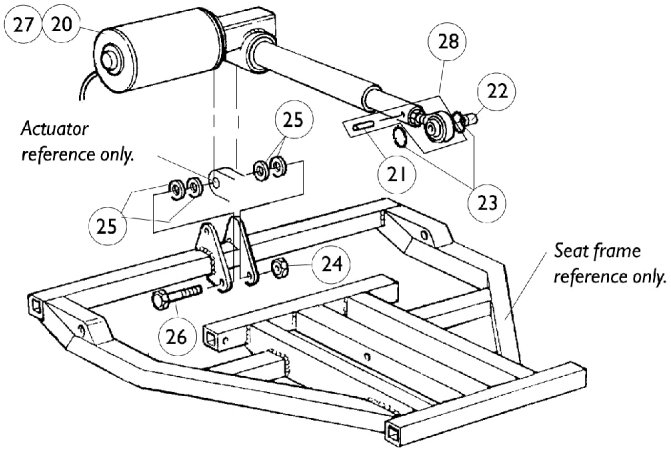

Motor Actuators
Tilt, Recline and V.S.R.
Tilt/Recline and Recline Only

VSR

Item Number	Note	Part Number	Description	Quantity Per Package	Quantity Per Assembly
1	A	0000800-NLA	Actuator Motor Assembly, V.S.R. (4" Stroke)	1	1
1	C	0001100-NLA	NLA - Actuator Motor Assembly (5" Stroke)	1	1
2		0053006-NLA	NLA - Screw, Hex Head (1/4-20 x 3/4")	1	1
3		7930323-NLA	NLA - Package, Locknut (1/4-20)	25	2
4		0051006-NLA	NLA - Screw, Hex Head Full Thread (1/4-20 x 1-1/2")	1	1
5		0050406	Washer, Flat (1/4 x 5/8 x 1/16")	1	2
6		7930333	Locknut (1/4-20)	25	1
7	A,B	1072853-NLA	NLA - Kit, Actuator Motor w/ Hardware, V.S.R. (4" Stroke)	1	1
7	A,B	1072854-NLA	NLA - Kit, Actuator Motor w/ Hardware, V.S.R. (5" Stroke)	1	1
8		0314402	Bracket, V.S.R. Mounting, Black	1	1
9		0195606-NLA	NLA - Screw, Socket, Cap, Flat Head (1/4-20 x 3/4")	1	2
10		7930323-NLA	NLA - Package, Locknut (1/4-20)	1	1

NOTE: A - A.B.S. back uses a 4" stroke actuator with 21"-22" back heights. A.B.S. back uses a 5" stroke actuator with 23"-25" back heights. Profile and recessed backs use a 4" storke actuator with 23"-25" back heights.
B - Includes items 1-6
C - 5" Stroke, V.S.R.

Recline

Item Number	Note	Part Number	Description	Quantity Per Package	Quantity Per Assembly
11		0312000-NLA	NLA - Actuator Motor Assembly, Recline (6.5" Stroke)	1	1
12		1028848-NLA	NLA - Pin, Roll (1/8" x 7/8")	1	1
13		0060500	Bushing (3/8 x 1/2 x 5/8")	1	1
14		0054106-NLA	NLA - Locknut, High Profile (3/8-16)	1	2
15		0053900-NLA	NLA - Washer, Nylon (3/8 x 13/16 x 1/16")	1	4
16		1106223	Screw, Socket Head (3/8-16 x 2-1/2")	1	1
17		0054606-NLA	NLA - Screw, Hex Head (3/8-16 x 2")	1	1
18		0056000-NLA	NLA - O-Ring (1/2 x 7/8 x 3/16")	1	2
19	A	1072821-NLA	NLA - Actuator Motor w/Hardware	1	1

NOTE: A - Includes items 11-18

Motor Actuators
Tilt, Recline and V.S.R.
Tilt/Recline and Recline Only

Tilt

Item Number	Note	Part Number	Description	Quantity Per	
				Package	Assembly
20		0308500-NLA	NLA - Actuator Motor Assembly, Large (5" Stroke)	1	1
21		0308600	Pin, Roll (1/8 x 7/8")	1	1
22		0060500	Bushing (3/8 x 1/2 x 5/8")	1	1
23		0140600	Washer, Rubber (13/16 x 13/32 x 3/32)	1	2
24		0054106-NLA	NLA - Locknut, High Profile (3/8-16)	1	1
25		0053900-NLA	NLA - Washer, Nylon (3/8 x 13/16 x 1/16")	1	4
26		1106223	Screw, Socket Head (3/8-16 x 2-1/2")	1	1
27	A	1072786-NLA	NLA - Actuator Motor w/ Hardware, Large (5" Stroke)	1	1
28	B	0313900-NLA	NLA - Rod, End with Locknut and Roll Pin	1	1
28	C	1077197	Rod, End w/ Locknut and Roll Pin	1	1
29	C,D	1084707-NLA	NLA - Rod, End with Locknut and Roll Pin	1	1

NOTE: A - Includes items 20-26
B - SKF Actuator
C - Motion Systems Actuator
D - V.S.R.

Seat Pan & Extensions

Basic Tilt & Tilt Only

NOTE: To achieve a 17" seat depth, order a 16" deep seat pan and 1" extension kit.
NOTE: To achieve a 19" seat depth, order a 18" deep seat pan and 1" extension kit.
NOTE: To achieve a 20" seat depth, order a 18" deep seat pan and 2" extension kit.
NOTE: 21" and 22" wide seat pans are the only exceptions.
NOTE: 23"-24" Wide x 23"-24" Deep order as specials.
NOTE: 14"-22" Wide x 23"-24" Deep order as specials.

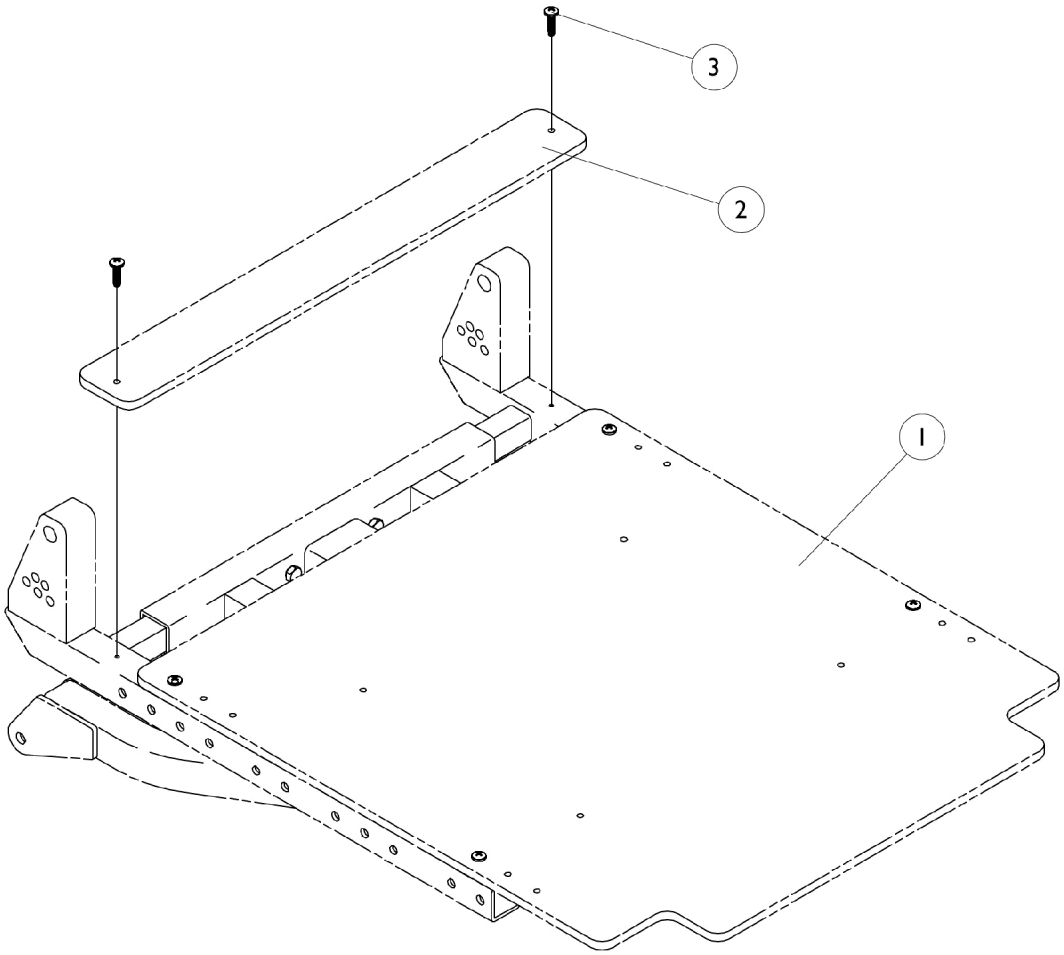

Seat Pan & Extensions

Basic Tilt & Tilt Only

NOTE: To achieve a 17" seat depth, order a 16" deep seat pan and 1" extension kit.
NOTE: To achieve a 19" seat depth, order a 18" deep seat pan and 1" extension kit.
NOTE: To achieve a 20" seat depth, order a 18" deep seat pan and 2" extension kit.
NOTE: 21" and 22" wide seat pans are the only exceptions.
NOTE: 23"-24" Wide x 23"-24" Deep order as specials.
NOTE: 14"-22" Wide x 23"-24" Deep order as specials.

Item #1 Seat Pan

Width	16" Deep	17" Deep	18" Deep	19" Deep	20" Deep	21" Deep	22" Deep
14"	1073042-NLA	N/A	1073044-NLA	N/A	N/A	0289919-NLA	0290019
15"	1073043-NLA	N/A	1073045-NLA	N/A	N/A	0290319-NLA	0290419-NLA
16"	0314719-NLA	N/A	0122519-NLA	N/A	N/A	0290719-NLA	0290819-NLA
17"	0314819	N/A	0122619-NLA	N/A	N/A	0291119-NLA	0291219-NLA
18"	0314919-NLA	N/A	0122719-NLA	N/A	N/A	0291519-NLA	0219619
19"	0315019	N/A	0122819	N/A	N/A	0291919-NLA	0292019-NLA
20"	0315119-NLA	N/A	0122919-NLA	N/A	N/A	0292319	0292419
21"	0315219-NLA	1073094-NLA See Note(s) A	0170019	1073096-NLA See Note(s) A	1073110-NLA See Note(s) A	0292719-NLA	0292819-NLA
22"	0315319-NLA	1073095-NLA See Note(s) A	0170119	1073097-NLA See Note(s) A	1073111-NLA See Note(s) A	0293119-NLA	0293219

NOTE: A - Seat pans for 21" and 22" wide are made out of 1 piece material for 17", 19" and 20" deep.

NOTE: To achieve a 17" seat depth, order a 16" deep seat pan and 1" extension kit.
NOTE: To achieve a 19" seat depth, order a 18" deep seat pan and 1" extension kit.
NOTE: To achieve a 20" seat depth, order a 18" deep seat pan and 2" extension kit.
NOTE: 21" and 22" wide seat pans are the only exceptions.
NOTE: 23"-24" Wide x 23"-24" Deep order as specials.
NOTE: 14"-22" Wide x 23"-24" Deep order as specials.

Item #2 Extensions

Width	1" Deep	2" Deep
14"	1073046-NLA	1073048-NLA
15"	1073047-NLA	1073049-NLA
16"	0123519-NLA	0123019-NLA
17"	0123619-NLA	0123119-NLA
18"	0123719-NLA	0123219-NLA
19"	0123819-NLA	0123319-NLA
20"	0123919-NLA	0123419-NLA

Seat Pan & Extensions

Basic Tilt & Tilt Only

NOTE: To achieve a 17" seat depth, order a 16" deep seat pan and 1" extension kit.
NOTE: To achieve a 19" seat depth, order a 18" deep seat pan and 1" extension kit.
NOTE: To achieve a 20" seat depth, order a 18" deep seat pan and 2" extension kit.
NOTE: 21" and 22" wide seat pans are the only exceptions.
NOTE: 23"-24" Wide x 23"-24" Deep order as specials.
NOTE: 14"-22" Wide x 23"-24" Deep order as specials.

Item Number	Note	Part Number	Description	Quantity Per	
				Package	Assembly
1		See Chart	#1 Seat Pan and Extensions	1	1
2		See Chart	#2 Seat Pan and Extensions	1	1
3		1072695-NLA	NLA - Screw, Phillips Pan Head Tap (#6 x 1/2")	1	4

Seat Pan & Extensions

Basic Recline 4XP

NOTE: To achieve an 18" seat depth, order a 16" deep seat pan and 2" extension kit.
NOTE: To achieve an 20" seat depth, order a 16" deep seat pan and 4" extension kit.

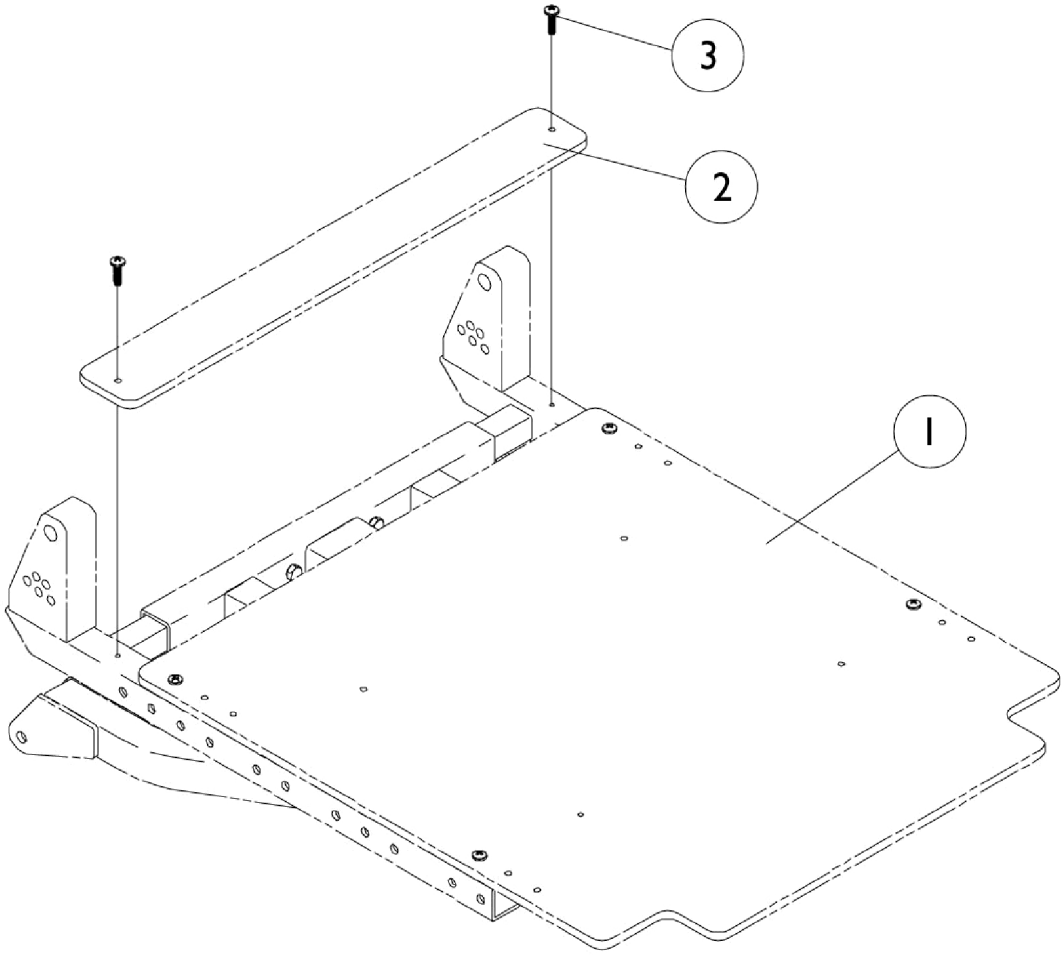

Item #1 Seat Pan

Depth	16" Wide	18" Wide
16" Deep	0221419	0221519

Seat Pan & Extensions

Basic Recline 4XP

NOTE: To achieve an 18" seat depth, order a 16" deep seat pan and 2" extension kit.
NOTE: To achieve an 20" seat depth, order a 16" deep seat pan and 4" extension kit.

Item #2 Seat Pan Extensions

Depth	16" Wide	18" Wide
2" Deep	0123019-NLA	0123219-NLA
4" Deep	0221119-NLA	0221219-NLA

Item Number	Note	Part Number	Description	Quantity Per	
				Package	Assembly
1		See Chart	#1 Seat Pan	1	1
2		See Chart	#2 Seat Pan Extensions	1	1
3		1072695-NLA	NLA - Screw, Phillips Pan Head Tap (#6 x 1/2")	1	4

Seat Pan & Extensions

Tilt/Recline & Recline Only

NOTE: To achieve a 17" seat depth, order a 16" deep seat pan and 1" extension kit.
NOTE: To achieve a 19" seat depth, order a 18" deep seat pan and 1" extension kit.
NOTE: To achieve a 20" seat depth, order a 18" deep seat pan and 2" extension kit.
NOTE: 21" and 22" wide seat pans are the only exceptions.
NOTE: 23"-24" Wide x 23"-24" Deep order as specials.
NOTE: 14"-22" Wide x 23"-24" Deep order as specials.

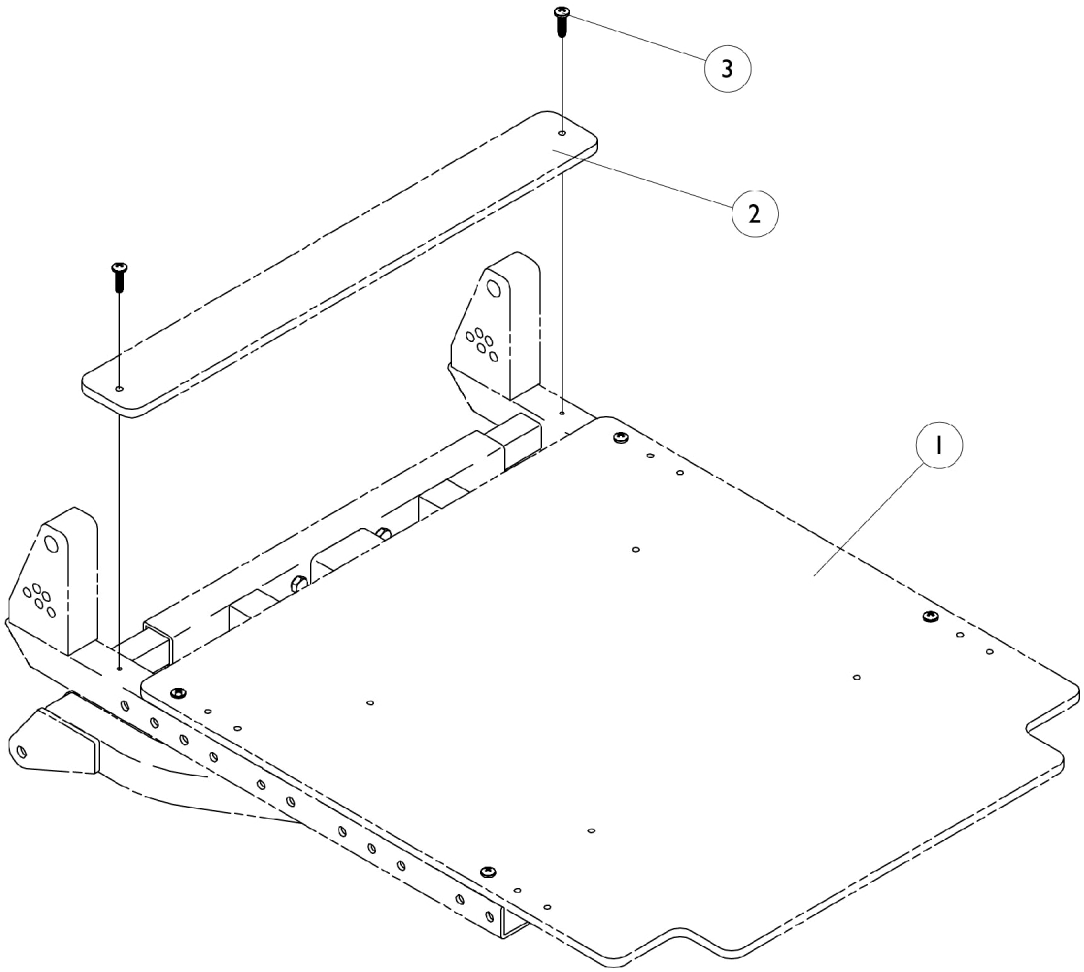

Seat Pan & Extensions

Tilt/Recline & Recline Only

NOTE: To achieve a 17" seat depth, order a 16" deep seat pan and 1" extension kit.
NOTE: To achieve a 19" seat depth, order a 18" deep seat pan and 1" extension kit.
NOTE: To achieve a 20" seat depth, order a 18" deep seat pan and 2" extension kit.
NOTE: 21" and 22" wide seat pans are the only exceptions.
NOTE: 23"-24" Wide x 23"-24" Deep order as specials.
NOTE: 14"-22" Wide x 23"-24" Deep order as specials.

Item #1 Seat Pan

Width	16" Deep	17" Deep	18" Deep	19" Deep	20" Deep	21" Deep	22" Deep
14"	1073042-NLA	N/A	1073044-NLA	N/A	N/A	0289919-NLA	0290019
15"	1073043-NLA	N/A	1073045-NLA	N/A	N/A	0290319-NLA	0290419-NLA
16"	0314719-NLA	N/A	0122519-NLA	N/A	N/A	0290719-NLA	0290819-NLA
17"	0314819	N/A	0122619-NLA	N/A	N/A	0291119-NLA	0291219-NLA
18"	0314919-NLA	N/A	0122719-NLA	N/A	N/A	0291519-NLA	0219619
19"	0315019	N/A	0122819	N/A	N/A	0291919-NLA	0292019-NLA
20"	0315119-NLA	N/A	0122919-NLA	N/A	N/A	0292319	0292419
21"	0315219-NLA	1073094-NLA See Note(s) A	0170019	1073096-NLA See Note(s) A	1073110-NLA See Note(s) A	0292719-NLA	0292819-NLA
22"	0315319-NLA	1073095-NLA See Note(s) A	0170119	1073097-NLA See Note(s) A	1073111-NLA See Note(s) A	0293119-NLA	0293219

NOTE: A - Seat pans for 21" and 22" wide are made out of 1 piece material for 17", 19" and 20" deep.

NOTE: To achieve a 17" seat depth, order a 16" deep seat pan and 1" extension kit.
NOTE: To achieve a 19" seat depth, order a 18" deep seat pan and 1" extension kit.
NOTE: To achieve a 20" seat depth, order a 18" deep seat pan and 2" extension kit.
NOTE: 21" and 22" wide seat pans are the only exceptions.
NOTE: 23"-24" Wide x 23"-24" Deep order as specials.
NOTE: 14"-22" Wide x 23"-24" Deep order as specials.

Item #2 Extensions

Width	1" Deep	2" Deep
14"	1073046-NLA	1073048-NLA
15"	1073047-NLA	1073049-NLA
16"	0123519-NLA	0123019-NLA
17"	0123619-NLA	0123119-NLA
18"	0123719-NLA	0123219-NLA
19"	0123819-NLA	0123319-NLA
20"	0123919-NLA	0123419-NLA

Seat Pan & Extensions

Tilt/Recline & Recline Only

NOTE: To achieve a 17" seat depth, order a 16" deep seat pan and 1" extension kit.
NOTE: To achieve a 19" seat depth, order a 18" deep seat pan and 1" extension kit.
NOTE: To achieve a 20" seat depth, order a 18" deep seat pan and 2" extension kit.
NOTE: 21" and 22" wide seat pans are the only exceptions.
NOTE: 23"-24" Wide x 23"-24" Deep order as specials.
NOTE: 14"-22" Wide x 23"-24" Deep order as specials.

Item Number	Note	Part Number	Description	Quantity Per	
				Package	Assembly
1		See Chart	#1 Seat Pan and Extensions	1	1
2		See Chart	#2 Seat Pan and Extensions	1	1
3		1072695-NLA	NLA - Screw, Phillips Pan Head Tap (#6 x 1/2")	1	4

S.F.T. Switch w/ Drive Lockout & DAD Box (Before 1/18/99)

Basic Tilt Only

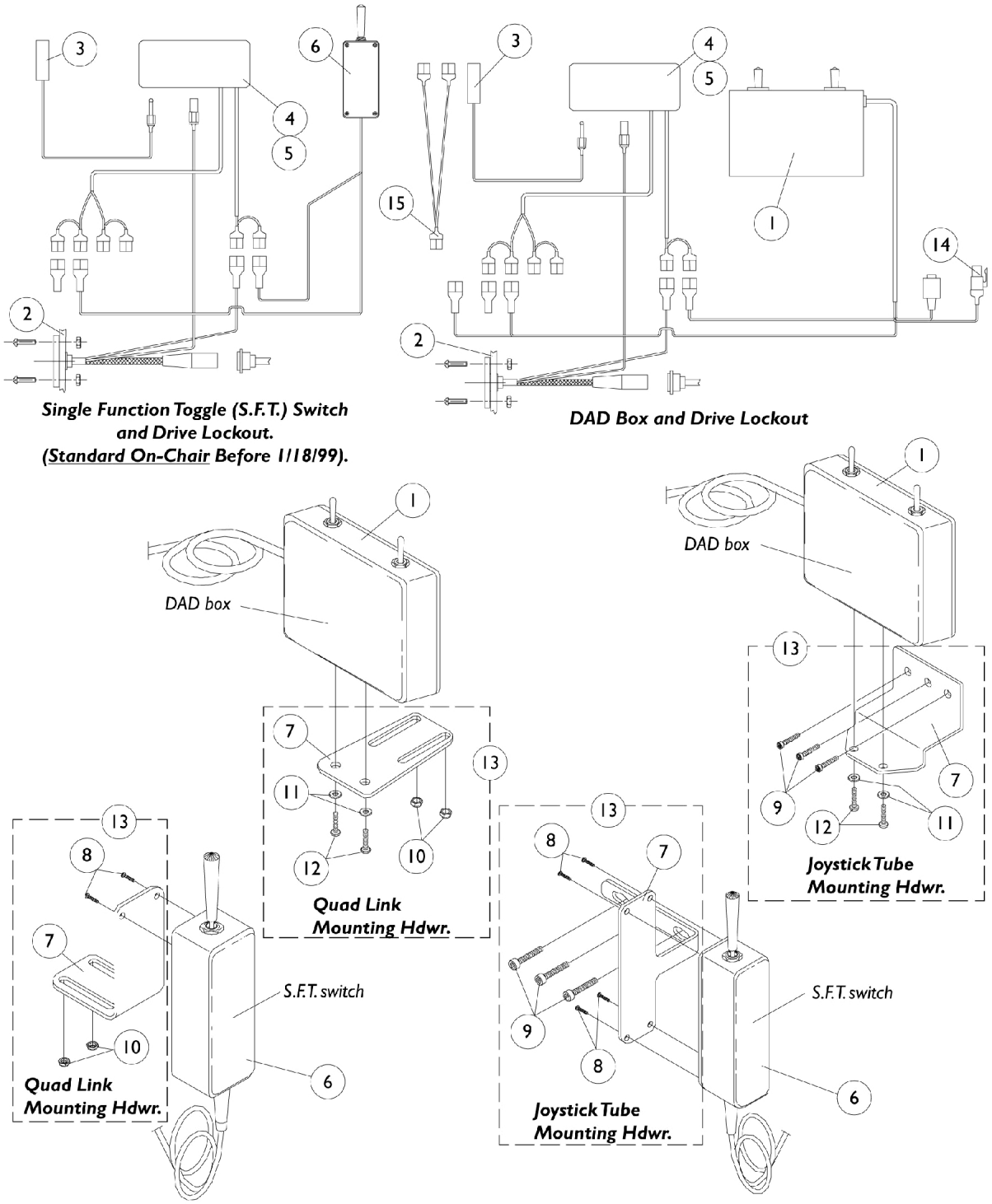

S.F.T. Switch w/ Drive Lockout & DAD Box (Before 1/18/99)

Basic Tilt Only

Item Number	Note	Part Number	Description	Quantity Per	
				Package	Assembly
1		0012700-NLA	NLA - D.A.D. Box with Tilt Harness	1	1
2		0227700-NLA	NLA - Harness, Power, Storm	1	1
3	F	0018500-NLA	NLA - Switch, Limit	1	1
4		See Note	See Footnote	1	1
5	E	1077305	Drive Lockout Mounting Hardware - Tilt System	1	1
5		0020122-NLA	NLA - Mounting Plate	1	1
5		1072695-NLA	NLA - Screw, Phillips Pan Head Tap (#6 x 1/2")	1	2
5		0139606-NLA	NLA - Screw, Hex Head (5/16-18 x 1")	1	1
5		1072692-NLA	NLA - Lockwasher, Split (5/16")	1	1
6	A	0037400-NLA	NLA - Switch, S.F.T.	1	1
7	K	0224202-NLA	NLA - Plate, S.F.T. Switch, Joystick Tube Mounting	1	1
7	J	0224702	Plate, S.F.T. Switch, Quad Link Mounting	1	1
7	K	0225402-NLA	NLA - Plate, D.A.D. Box, Joystick Tube Mounting	1	1
7	J	0225602	Plate, D.A.D. Box, Quad Link Mounting	1	1
8	D	313329-NLA	NLA - Screw, Phillips Pan Head (#6-32 x 1/2")	1	2
9		7930304-NLA	NLA - Screw, Socket Head (1/4-20 x 1-1/4")	25	3
10		317601-NLA	NLA - Locknut, Low Profile (#10-32)	1	2
11		0224806-NLA	NLA - Washer (#10)	1	2
12		0067106-NLA	NLA - Screw, Phillips Pan Head (#10-32 x 1/2")	1	2
13	K	1077270-NLA	NLA - Mounting Plate Assembly, S.F.T. Switch, Joystick Tube	1	1
13	J	1077271-NLA	NLA - Mounting Plate Assembly, S.F.T. Switch, Quad Link	1	1
13	K	1077268	Mounting Plate Assembly, D.A.D. Box, Joystick Tube	1	1
13	J	1077269	Mounting Plate Assembly, D.A.D. Box, Quad Link	1	1
14		0238800-NLA	NLA - Switch, Limit Override (DAD Box)	1	1
15		1077405-NLA	NLA - Harness, Dual Actuator (DAD Box)	1	1
	C,G	0014800	Cable, Interface, Invacare R.I.M. Control	1	1
	C,G	0200300-NLA	NLA - Cable, Interface, Power Legs Combined	1	1
	C,H	1082364	Basic Tilt DAD Relay Controller Upgrade Assembly	1	1
	C,I	1084172	Basic Tilt DAD Relay Controller Upgrade Assembly	1	1
	B,C	1084706	Package, Decals, D.A.D. Relay Controller Upgrade	5	1

S.F.T. Switch w/ Drive Lockout & DAD Box (Before 1/18/99)

Basic Tilt Only

NOTE:
A - Old style S.F.T. switch doesn't have the drive lockout feature built in.
B - Decal package is supplied in all upgrade kits and covers all systems. Decals not sold separately. Decals are labeled "Tilt," "Recline," "Drive Lockout," "PLeg" and "caution While Propelling."
C - Not Shown
D - Joystick Tube Mounting Plate uses 4 each per assembly and the Quad Link Mounting Plate uses 2 each per assembly. Both use 1 each quantity per package.
E - Part numbers 0020122, 1072695, 0139606, and 1072692 are available for individual sale.
F - Drive Lockout
G - IDAD Box Only
H - Before 1/18/99 (Includes Items 1, 7, 9-12, and 14)
I - After 1/17/99 (Includes Items 1-5, 7, 9-12, and 14)
J - Use with Quad Link before 4/07/06
K - Use with Joystick Tube and Quad Link (QLA) after 4/06/06

S.F.T. Switch w/ Drive Lockout & DAD Box (Before 1/18/99)

Basic Recline (4XP)

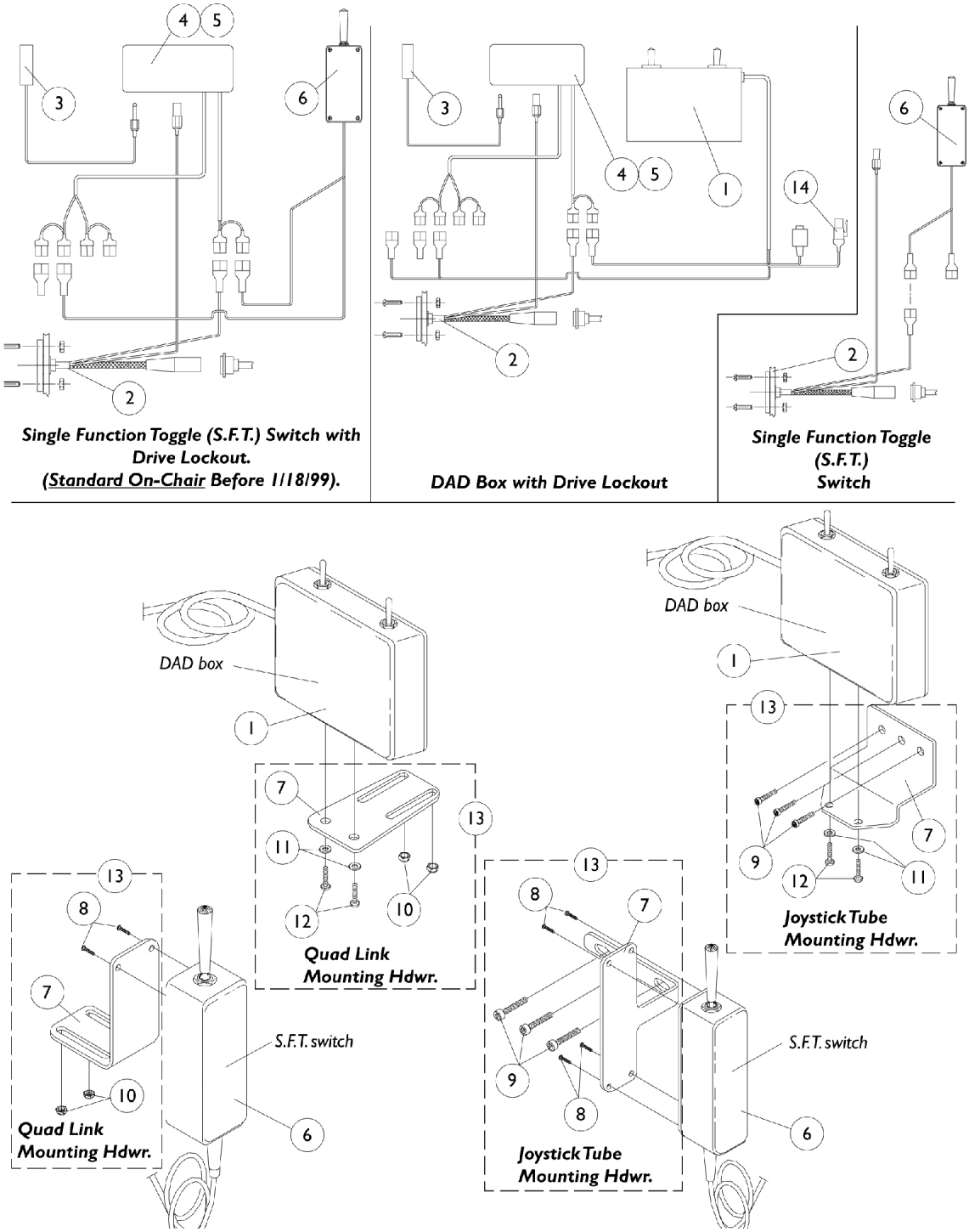

To order call toll free 1-800-333-6900, or www.invacare.com

S.F.T. Switch w/ Drive Lockout & DAD Box (Before 1/18/99)

Basic Recline (4XP)

S.F.T. Switch w/ Drive Lockout & DAD Box (Before 1/18/99)

Basic Recline (4XP)

Item Number	Note	Part Number	Description	Quantity Per	
				Package	Assembly
1		0012600-NLA	NLA - D.A.D. Box with Recline Harness	1	1
2		0227700-NLA	NLA - Harness, Power, Storm	1	1
3	G	0018500-NLA	NLA - Switch, Limit	1	1
4	K	See Note	See Footnote	1	1
5		1077304	Dual Lock, Male/ Female Adhesive Back (1" x 3")	1	1
6	A	0037400-NLA	NLA - Switch, S.F.T.	1	1
7	J	0224202-NLA	NLA - Plate, S.F.T. Switch, Joystick Tube Mounting	1	1
7	I	0224702	Plate, S.F.T. Switch, Quad Link Mounting	1	1
7	J	0225402-NLA	NLA - Plate, D.A.D. Box, Joystick Tube Mounting	1	1
7	I	0225602	Plate, D.A.D. Box, Quad Link Mounting	1	1
8	C	313329-NLA	NLA - Screw, Phillips Pan Head (#6-32 x 1/2")	1	1
9		7930304-NLA	NLA - Screw, Socket Head (1/4-20 x 1-1/4")	25	3
10		317601-NLA	NLA - Locknut, Low Profile (#10-32)	1	2
11		0224806-NLA	NLA - Washer (#10)	1	2
12		0067106-NLA	NLA - Screw, Phillips Pan Head (#10-32 x 1/2")	1	2
13	J	1077270-NLA	NLA - Mounting Plate Assembly, S.F.T. Switch, Joystick Tube	1	1
13	I	1077271-NLA	NLA - Mounting Plate Assembly, S.F.T. Switch, Quad Link	1	1
13	J	1077268	Mounting Plate Assembly, D.A.D. Box, Joystick Tube	1	1
13	I	1077269	Mounting Plate Assembly, D.A.D. Box, Quad Link	1	1
14		0238800-NLA	NLA - Switch, Limit Override (DAD Box)	1	1
	D,H	0014800	Cable, Interface, Invacare R.I.M. Control	1	1
	D,H	0200300-NLA	NLA - Cable, Interface, Power Legs Combined	1	1
	D,E	0190000-NLA	NLA - 4XP DAD Relay Controller Upgrade Assembly	1	1
	D,F	1084173-NLA	NLA - 4XP DAD Relay Controller Upgrade Assembly	1	1
	B,D	1084706	Package, Decals, D.A.D. Relay Controller Upgrade	5	1

S.F.T. Switch w/ Drive Lockout & DAD Box (Before 1/18/99)

Basic Recline (4XP)

NOTE:
A - Old Style S.F.T. switch doesn't have the drive lockout feature built in.
B - Decal package is supplied in all upgrade kits and covers all systems. Decals not sold separately. Decals are labeled "Tilt," "Recline," "Drive Lockout," "PLeg" and "Caution While Propelling."
C - Joystick Tube Mounting Plate uses 4 each per assembly and the Quad Link Mounting Plate uses 2 each per assembly. Both use 1 each quantity per package.
D - Not Shown.
E - Before 1/18/99 (Includes items 1, 7, 9-12 and 14)
F - After 1/17/99 (Includes items 1-5, 7, 9-12 and 14)
G - Drive Lockout
H - DAD Box Only
I - Use with Quad Link before 4/07/06
J - Use with Joystick Tube and Quad Link (QLA) after 4/06/06
K - Part is no longer serviceable in the field.

S.F.T. Switch w/ Drive Lockout Built In (After 1/17/99)

Basic Tilt Only

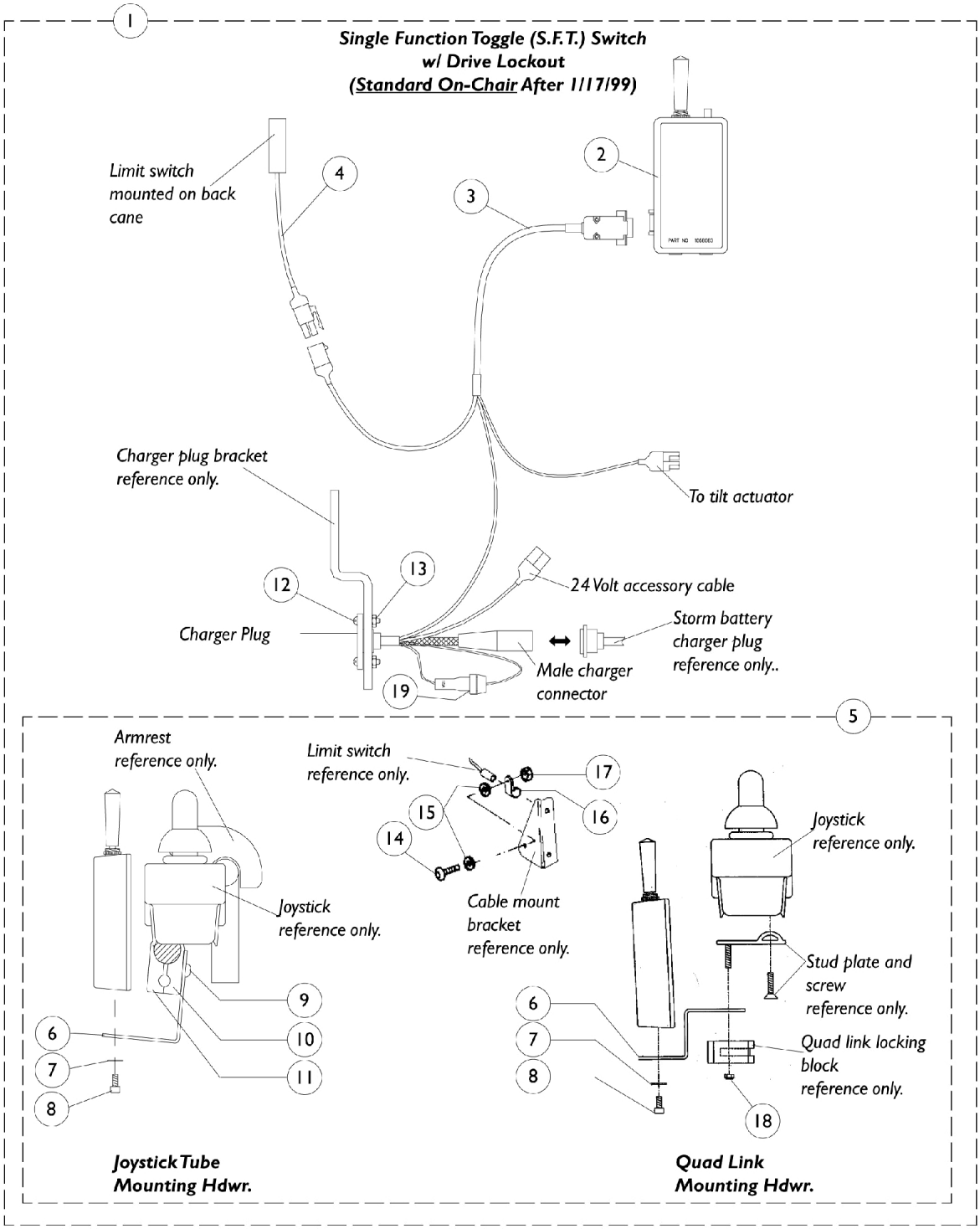

S.F.T. Switch w/ Drive Lockout Built In (After 1/17/99)

Basic Tilt Only

Item Number	Note	Part Number	Description	Quantity Per Package	Quantity Per Assembly
1	A,C	1068180-NLA	NLA - Switch, S.F.T. with Drive Lockout Retrofit Kit	1	1
2	A,C	1068083-NLA	NLA - Switch, S.F.T. w/ Drive Lockout Assembly	1	1
3		1068084-NLA	NLA - Harness, Wiring, S.F.T. Switch w/ Drive Lockout	1	1
4	D	0018600-NLA	NLA - Switch, Limit - Molex Style	1	1
5		1068177-NLA	NLA - Kit, Hardware, Attaching, S.F.T. Switch w/ Drive Lockout Retrofit	1	1
	B	1068181-NLA	NLA - Instruction Sheet	1	1
6	F	1068171-NLA	NLA - Bracket, Joystick Mounting, Black	1	1
6	E	1068087-NLA	NLA - Bracket, Quad Link Mounting, Black	1	1
7		0224806-NLA	NLA - Washer (#10)	1	2
8		0067006-NLA	NLA - Screw, Cap, Socket Head (#10-32 x 1/2")	1	2
9		0051206-NLA	NLA - Screw, Machine, Hex Socket, Button Head (1/4-20 x 1-1/4)	1	2
10		1049586	Half Clamp, Non-Threaded Holes	1	1
11		1049584-NLA	NLA - Half Clamp, Threaded Holes	1	1
12		313329-NLA	NLA - Screw, Phillips Pan Head (#6-32 x 1/2")	1	2
13		0143205-NLA	NLA - Locknut, Low Profile (#6-32)	1	2
14		0139306-NLA	NLA - Screw, Socket Button Head (#10-32 x 3/4")	1	1
15		1077143	Lockwasher, External Tooth (#10)	1	2
16		0062800-NLA	NLA - Bracket, Cable/Wire Mounting, Black	1	1
17		7930332-NLA	NLA - Locknut, High Profile (#10-32)	25	1
18		317601-NLA	NLA - Locknut, Low Profile (#10-32)	1	2
19		98000X055	Fuse, Automotive (15 AMP)	1	1
	B	0154500-NLA	NLA - Cable Tie, Black (4")	1	6
	B	0152400-NLA	NLA - Tie Wrap, Black (8" L)	1	6

NOTE:
A - New style S.F.T. switch has the drive lockout feature built in.
B - Not Shown.
C - After 1/17/99
D - Molex Style
E - Use with Quad Link before 4/07/06
F - Use with Joystick Tube and Quad Link (QLA) after 4/06/06

S.F.T. Switch w/ Drive Lockout Built In (After 1/17/99)

Basic Recline 4XP

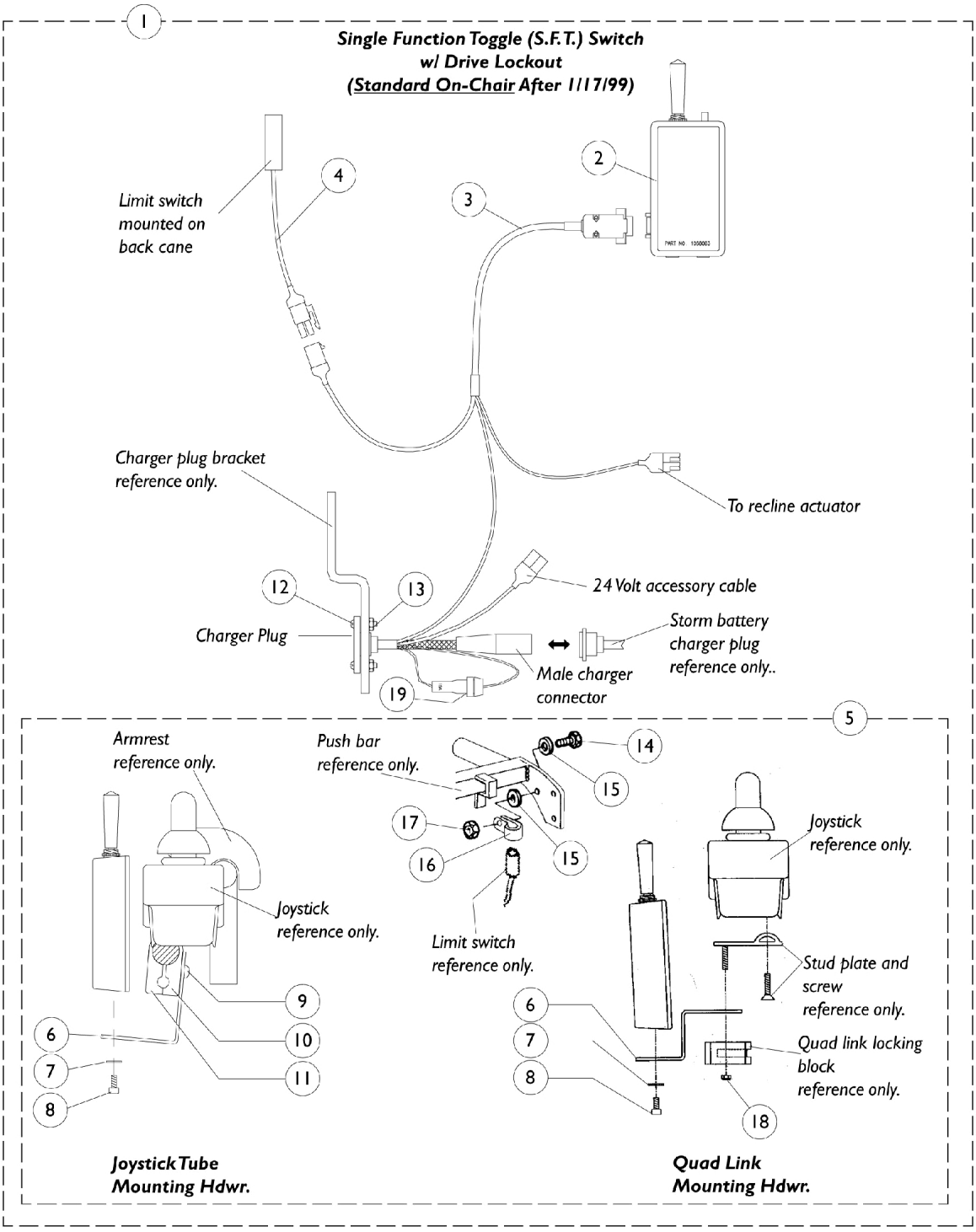

S.F.T. Switch w/ Drive Lockout Built In (After 1/17/99)

Basic Recline 4XP

Item Number	Note	Part Number	Description	Quantity Per Package	Quantity Per Assembly
1	A,C	1068182-NLA	NLA - Switch, S.F.T. with Drive Lockout Retrofit Kit	1	1
2	A,C	1068083-NLA	NLA - Switch, S.F.T. w/ Drive Lockout Assembly	1	1
3		1068178-NLA	NLA - Harness, Wiring, S.F.T. Switch w/ Drive Lockout	1	1
4	D	0018600-NLA	NLA - Switch, Limit - Molex Style	1	1
5		1068177-NLA	NLA - Kit, Hardware, Attaching, S.F.T. Switch w/ Drive Lockout Retrofit	1	1
	B	1077196-NLA	NLA - Instruction Sheet	1	1
6	F	1068171-NLA	NLA - Bracket, Joystick Mounting, Black	1	1
6	E	1068087-NLA	NLA - Bracket, Quad Link Mounting, Black	1	1
7		0224806-NLA	NLA - Washer (#10)	1	2
8		0067006-NLA	NLA - Screw, Cap, Socket Head (#10-32 x 1/2")	1	2
9		0051206-NLA	NLA - Screw, Machine, Hex Socket, Button Head (1/4-20 x 1-1/4)	1	2
10		1049586	Half Clamp, Non-Threaded Holes	1	1
11		1049584-NLA	NLA - Half Clamp, Threaded Holes	1	1
12		313329-NLA	NLA - Screw, Phillips Pan Head (#6-32 x 1/2")	1	2
13		0143205-NLA	NLA - Locknut, Low Profile (#6-32)	1	2
14		0139306-NLA	NLA - Screw, Socket Button Head (#10-32 x 3/4")	1	1
15		1077143	Lockwasher, External Tooth (#10)	1	2
16		0062800-NLA	NLA - Bracket, Cable/Wire Mounting, Black	1	1
17		7930332-NLA	NLA - Locknut, High Profile (#10-32)	25	1
18		317601-NLA	NLA - Locknut, Low Profile (#10-32)	1	2
19		98000X055	Fuse, Automotive (15 AMP)	1	1
	B	0154500-NLA	NLA - Cable Tie, Black (4")	1	6
	B	0152400-NLA	NLA - Tie Wrap, Black (8" L)	1	6

NOTE:
A - New style S.F.T. switch has the drive lockout feature built in.
B - Not Shown.
C - After 1/17/99
D - Molex Style
E - Use with Quad Link before 4/07/06
F - Use with Joystick Tube and Quad Link (QLA) after 4/06/06

Max Controller 5.0, 5.5 & 4-Way Switch
Tilt Only

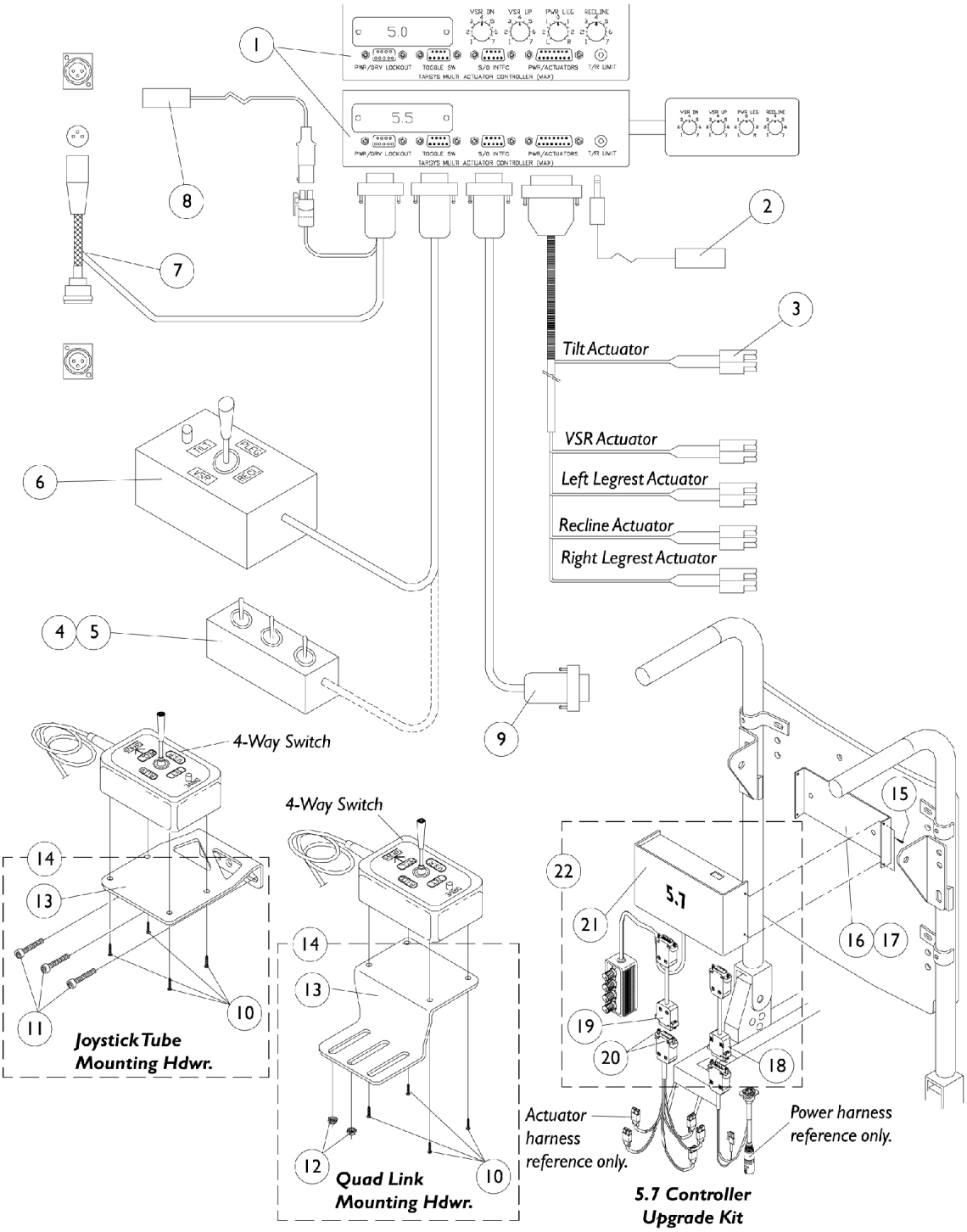

Max Controller 5.0, 5.5 & 4-Way Switch
Tilt Only

Item Number	Note	Part Number	Description	Quantity Per Package	Quantity Per Assembly
1		0020000	Controller, MAX (5.0)	1	1
1		0189000	Controller, MAX (5.5)	1	1
2	E	0018500-NLA	NLA - Switch, Limit	1	1
3		0019000	Harness, Actuator	1	1
4		0038100-NLA	NLA - Box, Switch, Triple	1	1
4		0037900-NLA	NLA - Box, Switch, Double	1	1
4		0038000	Box, Switch, Single	1	1
5		1077304	Dual Lock, Male/ Female Adhesive Back (1" x 3")	1	1
6		0279800-NLA	NLA - Box, Four Way Switch	1	1
7		0118100-NLA	NLA - Harness, Power, Storm, Square Plug	1	1
7		0190200-NLA	NLA - Power Harness, Storm, Round Plug	1	1
8	C	0018600-NLA	NLA - Switch, Limit - Molex Style	1	1
9		0200300-NLA	NLA - Cable, Interface, Power Legs Combined	1	1
9		0015000	Cable, Interface, Power Legs Independent (1 or 2 Functions)	1	1
9		0014800	Cable, Interface, Invacare R.I.M. Control	1	1
9		0015400-NLA	NLA - Cable, Interface, Peachtree Power Legs Combined	1	1
10		1072695-NLA	NLA - Screw, Phillips Pan Head Tap (#6 x 1/2")	1	4
11		7930304-NLA	NLA - Screw, Socket Head (1/4-20 x 1-1/4")	25	3
12		317601-NLA	NLA - Locknut, Low Profile (#10-32)	1	2
13	G	0194602-NLA	NLA - Plate, Joystick Tube Mounting	1	1
13	F	0212002-NLA	NLA - Plate, Quad Link Mounting	1	1
14	G	1077266-NLA	NLA - Mounting Plate Assembly, Joystick Tube	1	1
14	F	1077267	Mounting Plate Assembly, Quad Link	1	1
15		0067906-NLA	NLA - Screw, Phillips Head (#4-40 x 1/4")	1	4
16		0117206-NLA	NLA - Plate, Max Controller Mounting (4.0-5.5)	1	1
17	D	7930333	Locknut (1/4-20)	25	2
18		0279600-NLA	NLA - Adapter Cable, Power Harness 5.7 to 5.0-5.5	1	1
19		0279500-NLA	NLA - Adapter Cable, Actuator Harness 5.7 to 5.0-5.5	1	1
20		1082368-NLA	NLA - Stand-Off (1/4" D x 1/4" L #4-40)	1	4
21		1081573	Controller, MAX 5.7 (For Upgrade Kit Only)	1	1
22	B	1081827-NLA	NLA - Kit, MAX Controller Upgrade (5.7)	1	1
	A	1085399	Instruction Sheet, MAX Controller 5.7 Upgrade Kit	1	1

NOTE:
A - Not Shown
B - Includes items 18-21 and Instruction Sheet
C - Drive Lockout
D - Anchors Mounting Plate to Back Assembly
E - Tilt and Recline
F - Use with Quad Link before 4/07/06
G - Use with Joystick Tube and Quad Link (QLA) after 4/06/06

MAX Controller 5.0, 5.5 & 4-Way Switch
Tilt/Recline & Recline Only

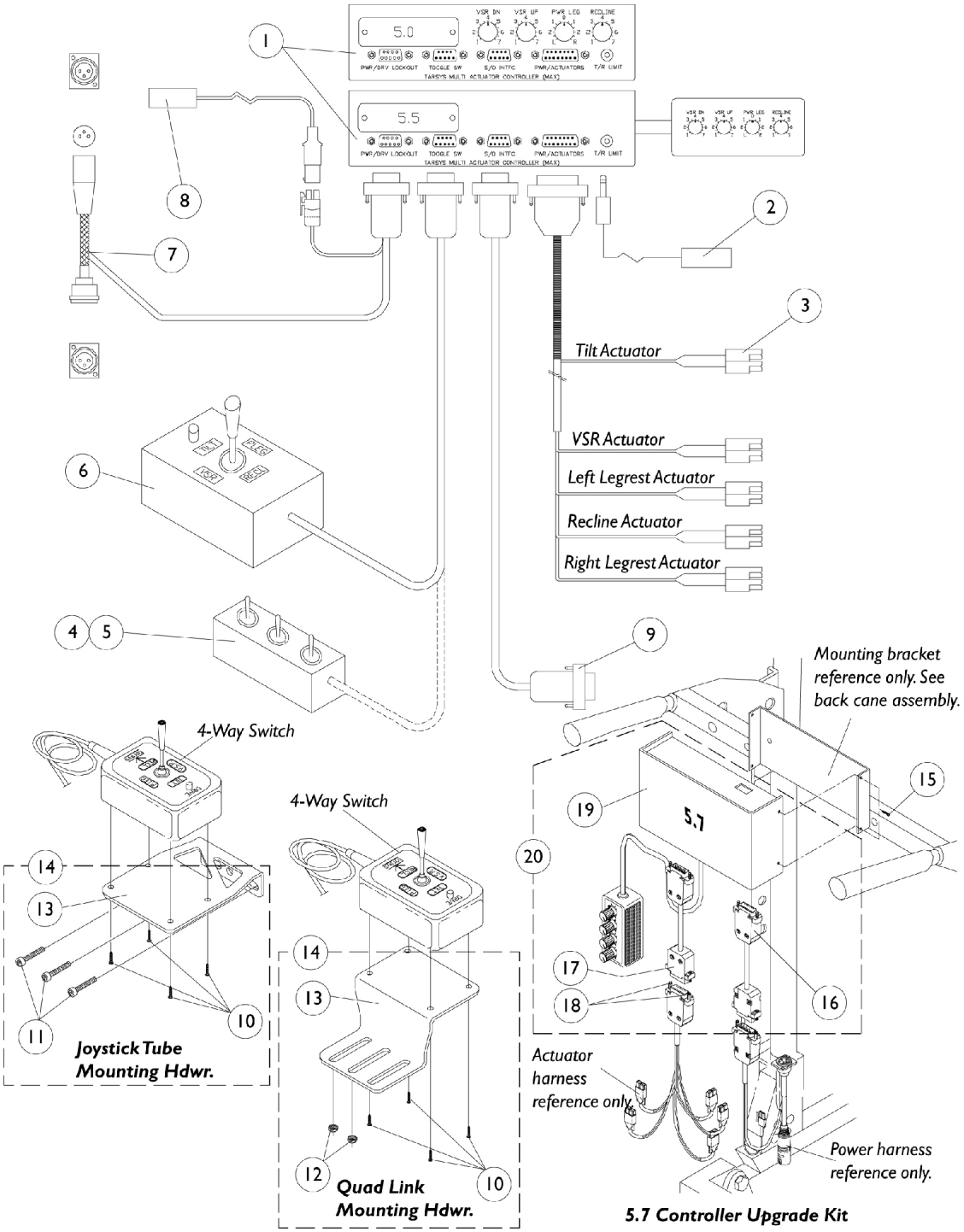

MAX Controller 5.0, 5.5 & 4-Way Switch

Tilt/Recline & Recline Only

Item Number	Note	Part Number	Description	Quantity Per Package	Quantity Per Assembly
1		0020000	Controller, MAX (5.0)	1	1
1		0189000	Controller, MAX (5.5)	1	1
2	D	0018500-NLA	NLA - Switch, Limit	1	1
3		0019000	Harness, Actuator	1	1
4		0038100-NLA	NLA - Box, Switch, Triple	1	1
4		0037900-NLA	NLA - Box, Switch, Double	1	1
4		0038000	Box, Switch, Single	1	1
5		1077304	Dual Lock, Male/ Female Adhesive Back (1" x 3")	1	1
6		0279800-NLA	NLA - Box, Four Way Switch	1	1
7		0118100-NLA	NLA - Harness, Power, Storm, Square Plug	1	1
7		0190200-NLA	NLA - Power Harness, Storm, Round Plug	1	1
8	C	0018600-NLA	NLA - Switch, Limit - Molex Style	1	1
9		0200300-NLA	NLA - Cable, Interface, Power Legs Combined	1	1
9		0015000	Cable, Interface, Power Legs Independent (1 or 2 Functions)	1	1
9		0014800	Cable, Interface, Invacare R.I.M. Control	1	1
9		0015400-NLA	NLA - Cable, Interface, Peachtree Power Legs Combined	1	1
10		1072695-NLA	NLA - Screw, Phillips Pan Head Tap (#6 x 1/2")	1	4
11		7930304-NLA	NLA - Screw, Socket Head (1/4-20 x 1-1/4")	25	3
12		317601-NLA	NLA - Locknut, Low Profile (#10-32)	1	2
13	F	0194602-NLA	NLA - Plate, Joystick Tube Mounting	1	1
13	E	0212002-NLA	NLA - Plate, Quad Link Mounting	1	1
14	F	1077266-NLA	NLA - Mounting Plate Assembly, Joystick Tube	1	1
14	E	1077267	Mounting Plate Assembly, Quad Link	1	1
15		0067906-NLA	NLA - Screw, Phillips Head (#4-40 x 1/4")	1	4
16		0279600-NLA	NLA - Adapter Cable, Power Harness 5.7 to 5.0-5.5	1	1
17		0279500-NLA	NLA - Adapter Cable, Actuator Harness 5.7 to 5.0-5.5	1	1
18		1082368-NLA	NLA - Stand-Off (1/4" D x 1/4" L #4-40)	1	4
19		1081573	Controller, MAX 5.7 (For Upgrade Kit Only)	1	1
20	B	1081827-NLA	NLA - Kit, MAX Controller Upgrade (5.7)	1	1
	A	1085399	Instruction Sheet, MAX Controller 5.7 Upgrade Kit	1	1

NOTE:
A - Not Shown.
B - Includes items 16-19 and Instruction Sheet
C - Drive Lockout
D - Tilt and Recline
E - Use with Quad Link before 4/07/06
F - Use with Joystick Tube and Quad Link (QLA) after 4/06/06

MAX Controller 5.7 S/N start at TE4000 & 4-Way Switch
Tilt Only

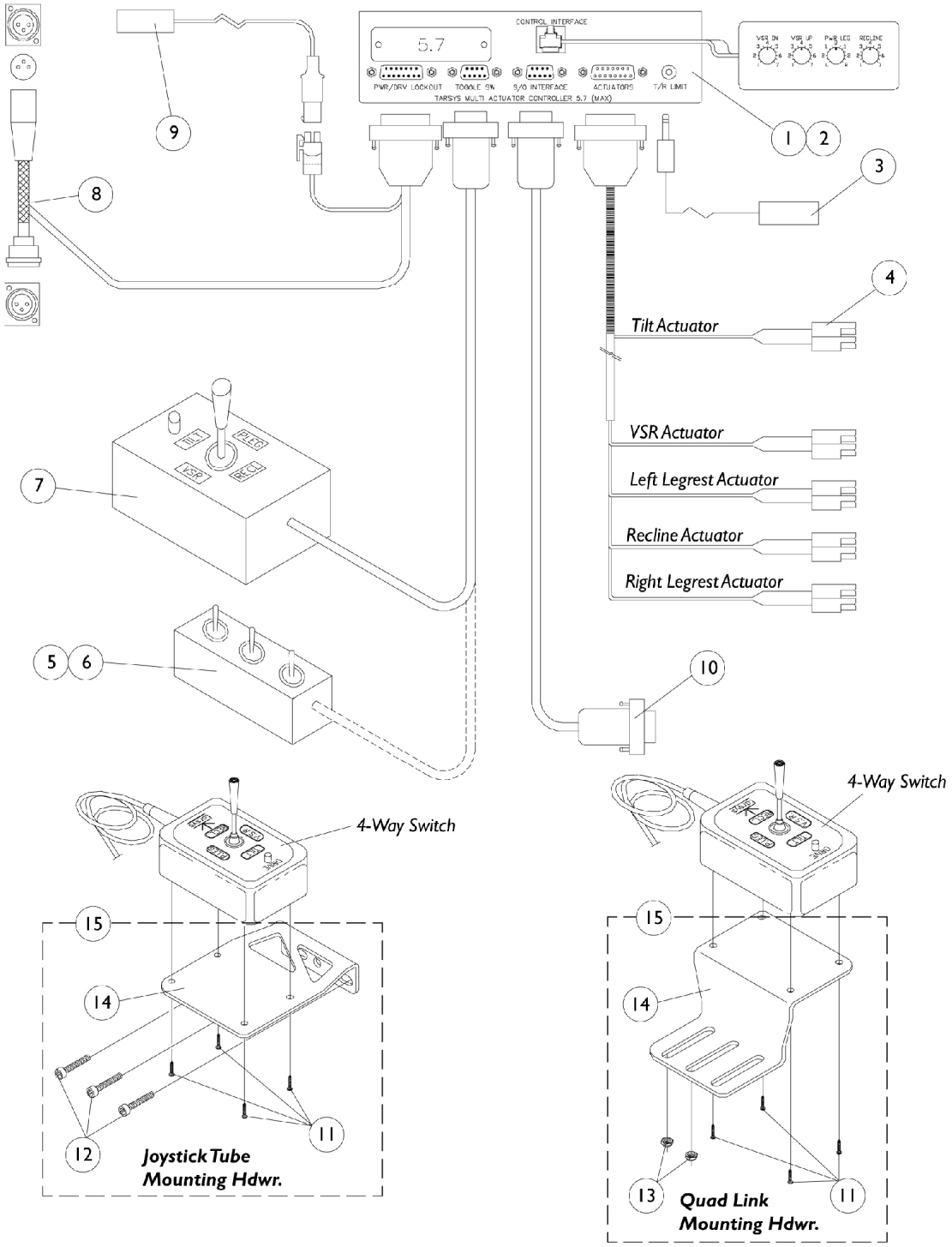

MAX Controller 5.7 S/N start at TE4000 & 4-Way Switch

Tilt Only

Item Number	Note	Part Number	Description	Quantity Per Package	Quantity Per Assembly
1		0282700-NLA	NLA - Controller, MAX (5.7)	1	1
	E,F	1081573	Controller, MAX 5.7 (For Upgrade Kit Only)	1	1
2	A	0051406-NLA	NLA - Screw, Machine, Hex Socket, Flat Head (1/4 x 1-3/4")	1	2
2	A	0050406	Washer, Flat (1/4 x 5/8 x 1/16")	1	2
2	A	7930333	Locknut (1/4-20)	1	2
2	A	0233222-NLA	NLA - Spacer, Plastic	1	2
2	A	0296500-NLA	NLA - Bag, MAX Controller (5.7)	1	1
2	B	0258006-NLA	NLA - Screw, Socket Head, Cap, Button (1/4-20 x 5/8")	1	2
2	B	1007453	Lockwasher, Split (1/4")	1	2
2	B	0296500-NLA	NLA - Bag, MAX Controller (5.7)	1	1
2	C	1024793-NLA	NLA - Screw, Hex Head (1/4-20 x 1-3/4")	1	2
2	C	0053200	Rivnut (1/4-20 x 11/16")	1	2
2	C	1007453	Lockwasher, Split (1/4")	1	2
2	C	0233222-NLA	NLA - Spacer, Plastic	1	2
2	C	0296500-NLA	NLA - Bag, MAX Controller (5.7)	1	1
3	D	0018500-NLA	NLA - Switch, Limit	1	1
4		0278600-NLA	NLA - Harness, Actuator	1	1
5		0038100-NLA	NLA - Box, Switch, Triple	1	1
5		0037900-NLA	NLA - Box, Switch, Double	1	1
5		0038000	Box, Switch, Single	1	1
6		1077304	Dual Lock, Male/ Female Adhesive Back (1" x 3")	1	1
7		0279800-NLA	NLA - Box, Four Way Switch	1	1
8		0278900-NLA	NLA - Harness, Power, Storm, Round Plug	1	1
9		0018600-NLA	NLA - Switch, Limit - Molex Style	1	1
10		0200300-NLA	NLA - Cable, Interface, Power Legs Combined	1	1
10		0015000	Cable, Interface, Power Legs Independent (1 or 2 Functions)	1	1
10		0014800	Cable, Interface, Invacare R.I.M. Control	1	1
10		0015400-NLA	NLA - Cable, Interface, Peachtree Power Legs Combined	1	1
11		1072695-NLA	NLA - Screw, Phillips Pan Head Tap (#6 x 1/2")	1	4
12		7930304-NLA	NLA - Screw, Socket Head (1/4-20 x 1-1/4")	25	3
13		317601-NLA	NLA - Locknut, Low Profile (#10-32)	1	2
14	H	0194602-NLA	NLA - Plate, Joystick Tube Mounting	1	1
14	G	0212002-NLA	NLA - Plate, Quad Link Mounting	1	1
15	H	1077266-NLA	NLA - Mounting Plate Assembly, Joystick Tube	1	1
15	G	1077267	Mounting Plate Assembly, Quad Link	1	1

MAX Controller 5.7 S/N start at TE4000 & 4-Way Switch

Tilt Only

NOTE:	A - Curved A.B.S. Back (Tilt System)
	B - Profile Back (Tilt System)
	C - Back Canes Only (Tilt System)
	D - Tilt and Recline
	E - Max Controller 5.7 is used only when the power and actuator "Adaptor Cables" are present.
	F - Not Shown
	G - Use with Quad Link before 4/07/06
	H - Use with Joystick Tube and Quad Link (QLA) after 4/06/06

MAX Controller 5.7 S/N start at TE4000 & 4-Way Switch

Tilt/Recline & Recline Only

NOTE: MKIVT.R.C.M. replaced the 5.7 MAX controller 6/15/98.

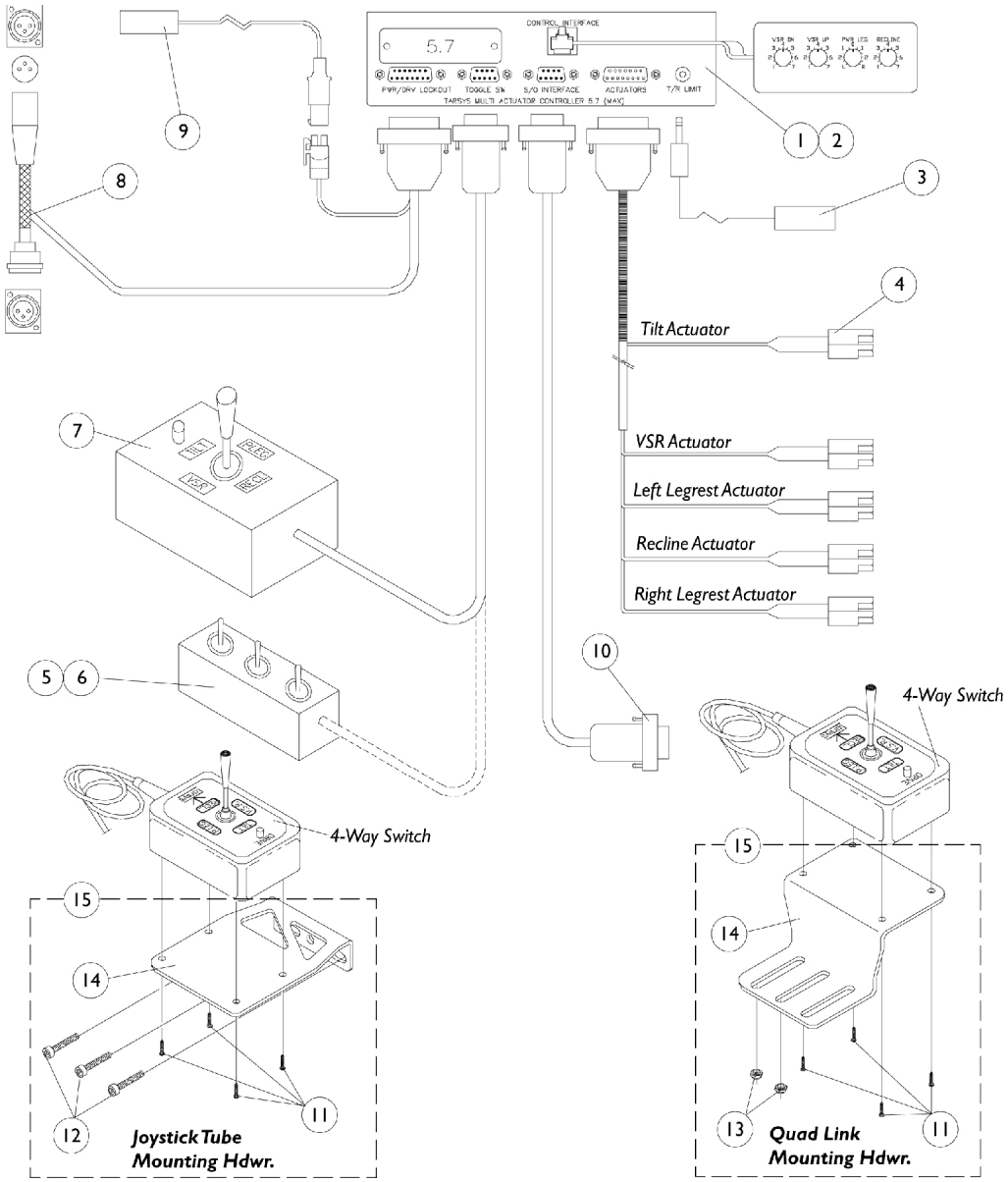

MAX Controller 5.7 S/N start at TE4000 & 4-Way Switch

Tilt/Recline & Recline Only

Item Number	Note	Part Number	Description	Quantity Per Package	Quantity Per Assembly
1		0282700-NLA	NLA - Controller, MAX (5.7)	1	1
	C,D	1081573	Controller, MAX 5.7 (For Upgrade Kit Only)	1	1
2		0139306-NLA	NLA - Screw, Socket Button Head (#10-32 x 3/4")	1	2
2		0281300	Rivnut (#10-32 x 19/32")	1	2
2		0224806-NLA	NLA - Washer (#10)	1	2
3	A	0018500-NLA	NLA - Switch, Limit	1	1
4		0278600-NLA	NLA - Harness, Actuator	1	1
5		0038100-NLA	NLA - Box, Switch, Triple	1	1
5		0037900-NLA	NLA - Box, Switch, Double	1	1
5		0038000	Box, Switch, Single	1	1
6		1077304	Dual Lock, Male/ Female Adhesive Back (1" x 3")	1	1
7		0279800-NLA	NLA - Box, Four Way Switch	1	1
8		0278900-NLA	NLA - Harness, Power, Storm, Round Plug	1	1
9	B	0018600-NLA	NLA - Switch, Limit - Molex Style	1	1
10		0200300-NLA	NLA - Cable, Interface, Power Legs Combined	1	1
10		0015000	Cable, Interface, Power Legs Independent (1 or 2 Functions)	1	1
10		0014800	Cable, Interface, Invacare R.I.M. Control	1	1
10		0015400-NLA	NLA - Cable, Interface, Peachtree Power Legs Combined	1	1
11		1072695-NLA	NLA - Screw, Phillips Pan Head Tap (#6 x 1/2")	1	4
12		7930304-NLA	NLA - Screw, Socket Head (1/4-20 x 1-1/4")	25	3
13		317601-NLA	NLA - Locknut, Low Profile (#10-32)	1	2
14	F	0194602-NLA	NLA - Plate, Joystick Tube Mounting	1	1
14	E	0212002-NLA	NLA - Plate, Quad Link Mounting	1	1
15	F	1077266-NLA	NLA - Mounting Plate Assembly, Joystick Tube	1	1
15	E	1077267	Mounting Plate Assembly, Quad Link	1	1

NOTE:
A - Tilt and Recline
B - Drive Lockout
C - Max Controller 5.7 is used only when the power and actuator "Adaptor Cables" are present.
D - Not Shown
E - Use with Quad Link before 4/07/06
F - Use with Joystick Tube and Quad Link (QLA) after 4/06/06

T.R.C.M. & 4-Way Switch

Tilt Only or Tilt/Recline & Recline Only

NOTE: MKIV T.R.C.M. replaced the 5.7 MAX controller 6/15/98 and became standard On-Chair for the seating systems listed above.

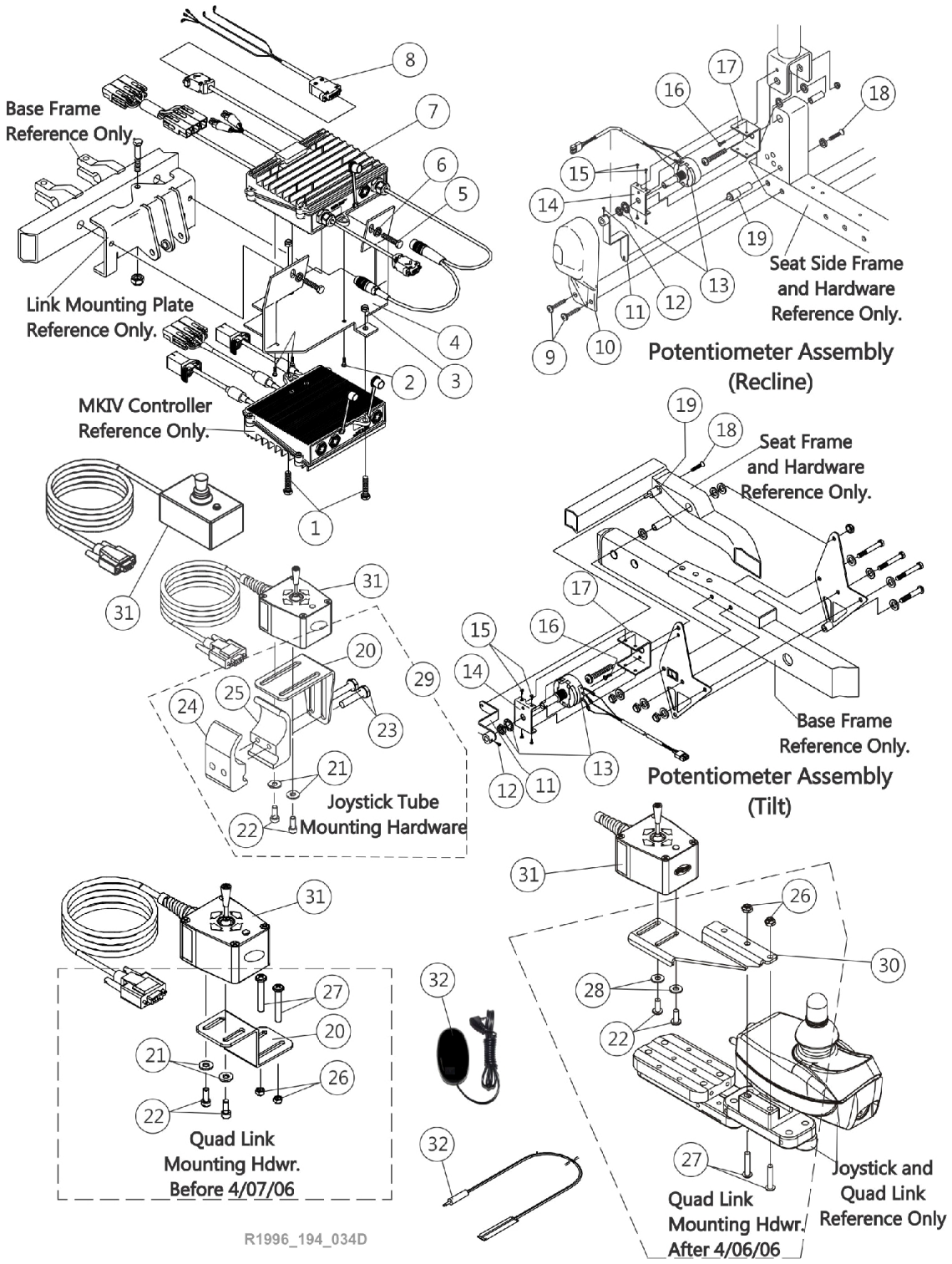

T.R.C.M. & 4-Way Switch
Tilt Only or Tilt/Recline & Recline Only

Item Number	Note	Part Number	Description	Quantity Per Package	Quantity Per Assembly
1		1025708-NLA	NLA - Bolt, Hex Head Cap (1/4-20 x 3/4")	1	2
2		1025729	Screw, Phillips Pan Head Tap (#8-32 x 3/8")	1	3
3		1025736	Locknut (1/4-20)	1	2
4		1079846-NLA	NLA - Bracket, T.R.C.M. Controller Mounting, Black	1	1
5		0139606-NLA	NLA - Screw, Hex Head (5/16-18 x 1")	1	2
6		1072692-NLA	NLA - Lockwasher, Split (5/16")	1	2
7		1079017-NLA	NLA - Controller, MKIV T.R.C.M.	1	1
8		1080133-NLA	NLA - Harness, Motor Actuator	1	1
9		0065706	Screw, Phillips Pan Head Tap (#10-16 x 3/4")	1	2
10		1077764-NLA	NLA - Cover, Potentiometer Mounting Bracket	1	1
11		1079272-NLA	NLA - Lever, Arm, Black	1	1
12		1025275-NLA	NLA - Screw, Set w/ Patch (#8-32 x 1/4")	1	1
13		1079991-NLA	NLA - Recline Potentiometer w/ Harness, Nut and Washer	1	1
13		1079992-NLA	NLA - Potentiometer, Tilt w/ Harness, Nut and Washer	1	1
14		1079278	Plate, Back	1	1
15		1017766-NLA	NLA - Screw, Phillips Pan Head (4-40 x 1/4")	1	4
16		1017766-NLA	NLA - Screw, Phillips Pan Head (4-40 x 1/4")	1	1
17		1079276	Plate, Front	1	1
18		1017423	Screw, Slotted Hex Washer Head w/ Patch (#10-32 x 1/2")	1	1
19		1079274	Stud, Mounting	1	1
29	A	1077519	Kit, 4-Way Switch Joystick Tube Mounting Hardware	1	1
20			NLA - Bracket, Joystick Mounting, Black	1	1
21			Washer (#10 Flat)	1	2
22			Screw, Phillips Pan Head (#10-32 x 1/2")	1	2
23			NLA - Screw, Hex Head (1/4-20 x 1-1/8")	1	2
24			Half Clamp, Non-Threaded Holes	1	1
25			NLA - Half Clamp, Threaded Holes	1	1
29	B,F	1077520-NLA	NLA - Kit, 4-Way Switch Quad Link Mounting Hardware	1	1
20			NLA - Bracket, Quad Link Mounting, Black	1	1
21			Washer (#10 Flat)	1	2
22			Screw, Phillips Pan Head (#10-32 x 1/2")	1	2
26			Locknut (#10-32)	1	2
27			Screw, Phillips Pan Head (#10-32 x 1-3/8")	1	2
29	D,F	1139418	Kit, 4-Way Switch Quad Link Mounting Hardware	1	1
22			Screw, Phillips Pan Head (#10-32 x 1/2")	1	2
26			Locknut (#10-32)	1	2
27			Screw, Phillips Pan Head w/Patch (#10-32 x 7/8")	1	2
28			NLA - Washer, Nylon (#10)	1	2
30		1134132	Bracket, 4-Way Switch Quad Link, Black - Right	1	1

T.R.C.M. & 4-Way Switch

Tilt Only or Tilt/Recline & Recline Only

Item Number	Note	Part Number	Description	Quantity Per Package	Quantity Per Assembly
30		1134133	Bracket, 4-Way Switch Quad Link, Black - Left	1	1
31	E	1080116-NLA	NLA - Switch, 4-Way (FWT)	1	1
31		60105577	Kit, Switch, 4-Way (FWT)	1	1
32		1020818	Switch, Red Flex Ribbon (Tape) Reset	1	1
32	C	1123276	Kit, Switch, Black Egg Reset w/ Hook/Loop Adhesive Back Fastener & Attaching Screws (EGSBLK)	1	1

NOTE:
A - Includes items 20-25
B - Before 4/07/06 and includes items 20-22, 26 and 27
C - After 5/23/04 the Egg Reset Switch became available as a service part and can be used as a direct replacement for the tape reset switch part # 1020818.
D - After 4/06/06 and includes items 22, 26-28
E - Part # 1080116 is No Longer Available. Order item #31 part number 60105577 as a replacement. New design is rectangular in shape. It is recommended to order new Hardware 1077519 as well.
F - 4-Way Toggle Switch 60105577 is not compatible with this hardware.

T.R.C.M. Upgrade Kit w/ Mercury Free Switches

Tilt Only or Tilt/Recline & Recline Only

As of 7/1/2009, switches are mercury free.

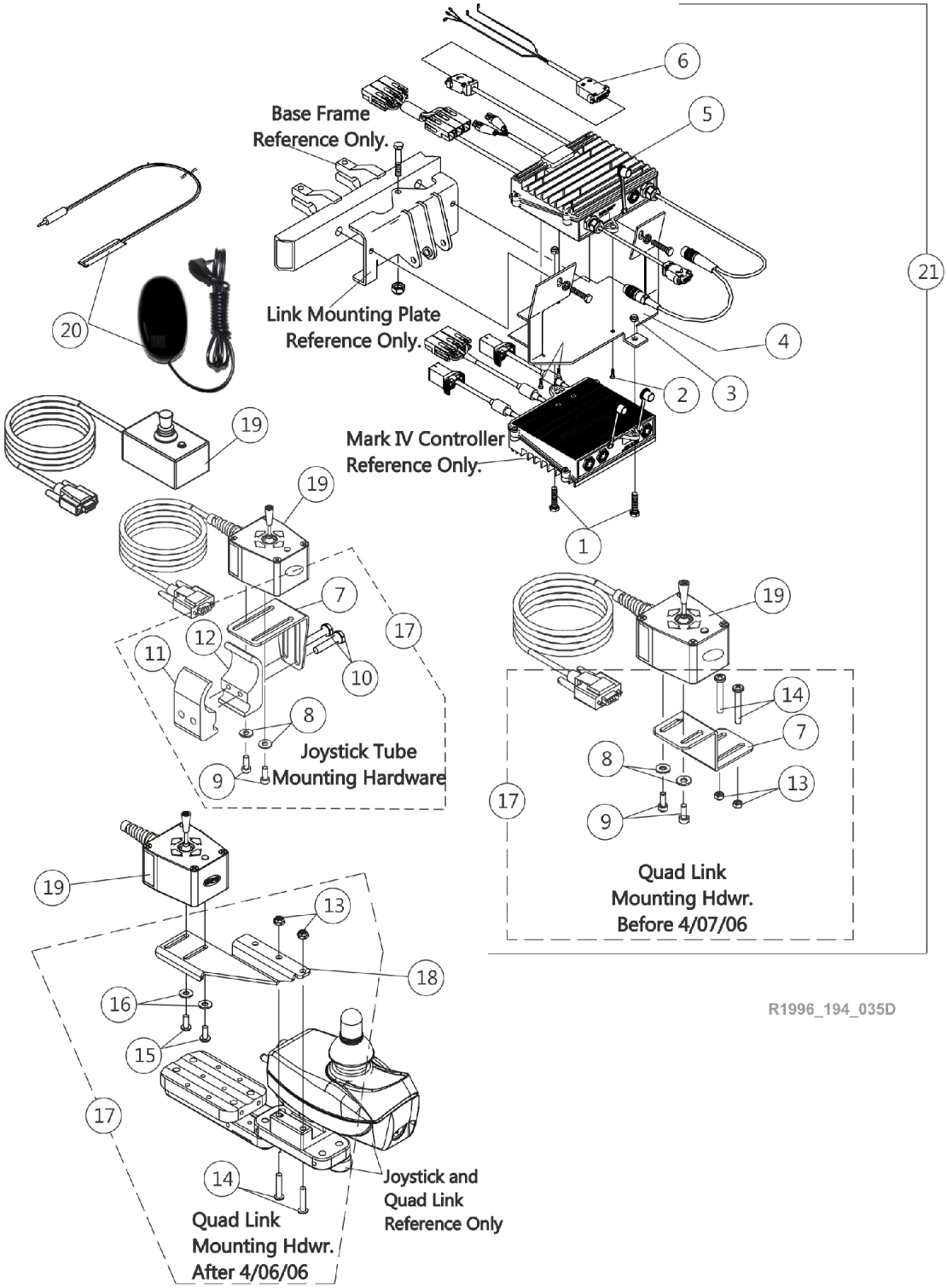

T.R.C.M. Upgrade Kit w/ Mercury Free Switches

Tilt Only or Tilt/Recline & Recline Only

As of 7/1/2009, switches are mercury free.

Item Number	Note	Part Number	Description	Quantity Per	
				Package	Assembly
1		1025708-NLA	NLA - Bolt, Hex Head Cap (1/4-20 x 3/4")	1	2
2		1025729	Screw, Phillips Pan Head Tap (#8-32 x 3/8")	1	3
3		1025736	Locknut (1/4-20)	1	2
4		1079846-NLA	NLA - Bracket, T.R.C.M. Controller Mounting, Black	1	1
5		1079017-NLA	NLA - Controller, MKIV T.R.C.M.	1	1
6		1080133-NLA	NLA - Harness, Motor Actuator	1	1
17	D	1077519	Kit, 4-Way Switch Joystick Tube Mounting Hardware	1	1
7			NLA - Bracket, Joystick Mounting, Black	1	1
8			Washer (#10 Flat)	1	2
9			Screw, Phillips Pan Head (#10-32 x 1/2")	1	2
10			NLA - Screw, Hex Head (1/4-20 x 1-1/8")	1	2
11			Half Clamp, Non-Threaded Holes	1	1
12			NLA - Half Clamp, Threaded Holes	1	1
17	I,E	1077520-NLA	NLA - Kit, 4-Way Switch Quad Link Mounting Hardware	1	1
7			Screw, Phillips Pan Head (#10-32 x 1/2")	1	2
8			NLA - Bracket, Quad Link Mounting, Black	1	1
9			Washer (#10 Flat)	1	2
13			Locknut (#10-32)	1	2
14			Screw, Phillips Pan Head (#10-32 x 1-3/8")	1	2
17	G,I	1139418	Kit, 4-Way Switch Quad Link Mounting Hardware	1	1
13			Locknut (#10-32)	1	2
14			Screw, Phillips Pan Head w/Patch (#10-32 x 7/8")	1	2
15			Screw, Phillips Pan Head (#10-32 x 1/2")	1	2
16			NLA - Washer, Nylon (#10)	1	2
18		1134132	Bracket, 4-Way Switch Quad Link, Black - Right	1	1
18		1134133	Bracket, 4-Way Switch Quad Link, Black - Left	1	1
19	H	1080116-NLA	NLA - Switch, 4-Way (FWT)	1	1
19		60105577	Kit, Switch, 4-Way (FWT)	1	1
20		1020818	Switch, Red Flex Ribbon (Tape) Reset	1	1
20	F	1123276	Kit, Switch, Black Egg Reset w/ Hook/Loop Adhesive Back Fastener & Attaching Screws (EGSBLK)	1	1
21	A,A1,A2,C	1081400-NLA	NLA - Kit, T.R.C.M. Upgrade with Mercury Switches	1	1
	B	1080635-NLA	NLA - Harness, Recline/Tilt Limit Mercury Free Ball Switch	1	1
	B	1080634-NLA	NLA - Harness, Drive Lockout Mercury Free Ball Switch	1	1
	B	0309019-NLA	NLA - Cover, Controller	1	1
	B	0152400-NLA	NLA - Tie Wrap, Black (8" L)	1	10
	B	0154500-NLA	NLA - Cable Tie, Black (4")	1	10

T.R.C.M. Upgrade Kit w/ Mercury Free Switches

Tilt Only or Tilt/Recline & Recline Only

As of 7/1/2009, switches are mercury free.

Item Number	Note	Part Number	Description	Quantity Per	
				Package	Assembly
	B	1081366-NLA	NLA - Instruction Sheet, MKIV T.R.C.M. Upgrade	1	1
	B	1043576-NLA	NLA - Service Manual, MKIV Electronics	1	1

NOTE:
A - To fully utilize the T.R.C.M. upgrade kit, it is required to have a MKIV controller part number (1105707) with 2.15 version software or higher. "Through the joystick operation" is not available for 2.0 through 2.14 version software.
A1 - Call technical service at 1-800-832-4707 for assistance on upgrading controller. Software version can be verified by using a remote programmer part number (1109091).
A2 - MKIV controller part numbers (1061958) and (1086240) were replaced with MKIV controller part number (1105707) and is applicable to use with all T.R.C.M. upgrade kits.
B - Not shown.
C - Include items 1-17 and all items below
D - Includes items 7-12
E - Before 4/07/06 and includes items 7-9, 13 and 14
F - After 5/23/04 the Egg Reset Switch became available as a service part and can be used as a direct replacement for the tape reset switch part # 1020818.
G - After 4/06/06. Includes items 13-16
H - Part # 1080116 is No Longer Available. Order item #19 part number 60105577 as a replacement. New design is rectangular in shape. It is recommended to order new Hardware 1077519 as well.
I - 4-Way Toggle Switch 60105577 is not compatible with this hardware.

MKIV Recliner Control (1815M4) & Recliner Cable
(Basic Tilt & Tilt Only) or (Basic Recline 4XP)

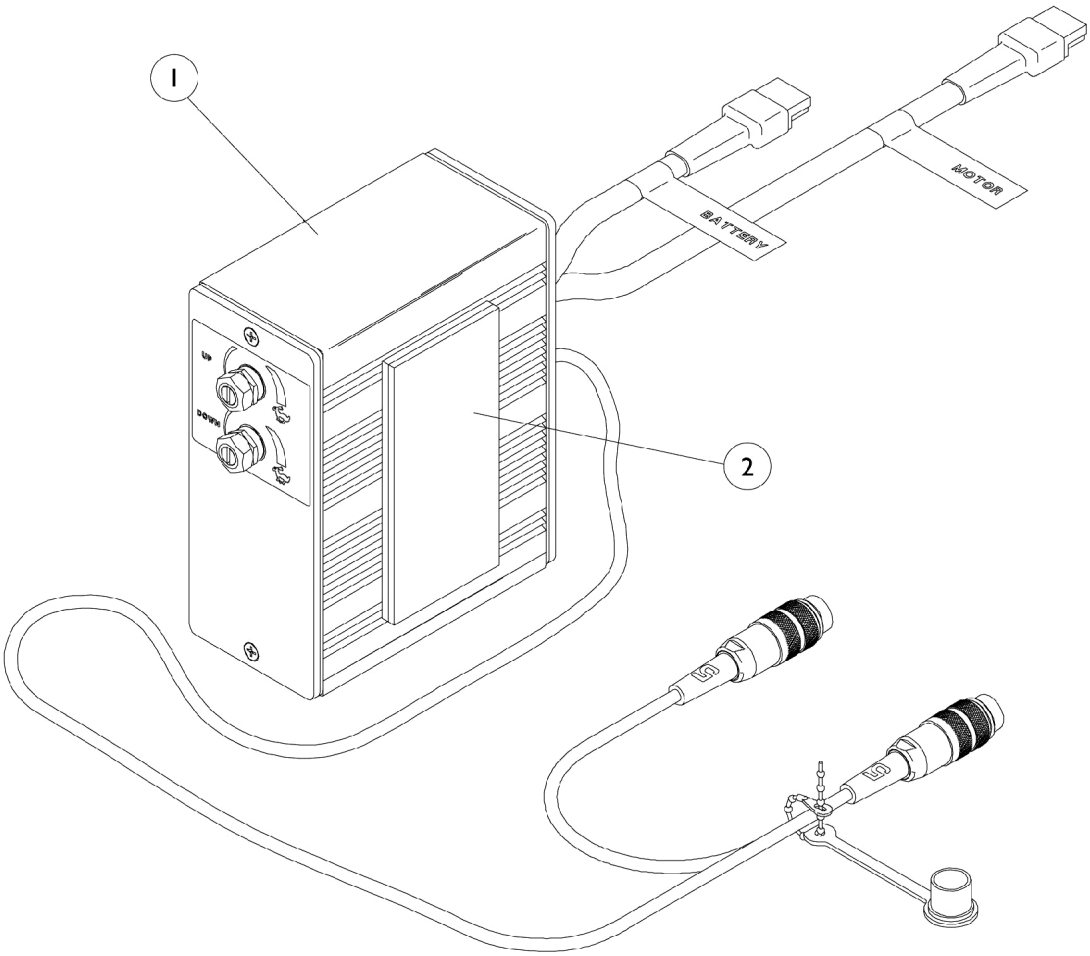

Item Number	Note	Part Number	Description	Quantity Per	
				Package	Assembly
1		1054376-NLA	NLA - Control, Recliner	1	1
2		1095501-NLA	NLA - Fastener, Dual Lock Hook and Loop Adhesive (2" W x 12" L)	1	1
	A	1005151-NLA	NLA - Cable, Recliner	1	1

NOTE: A - Not Shown

Quad Link Assembly
(Before 4/07/06)

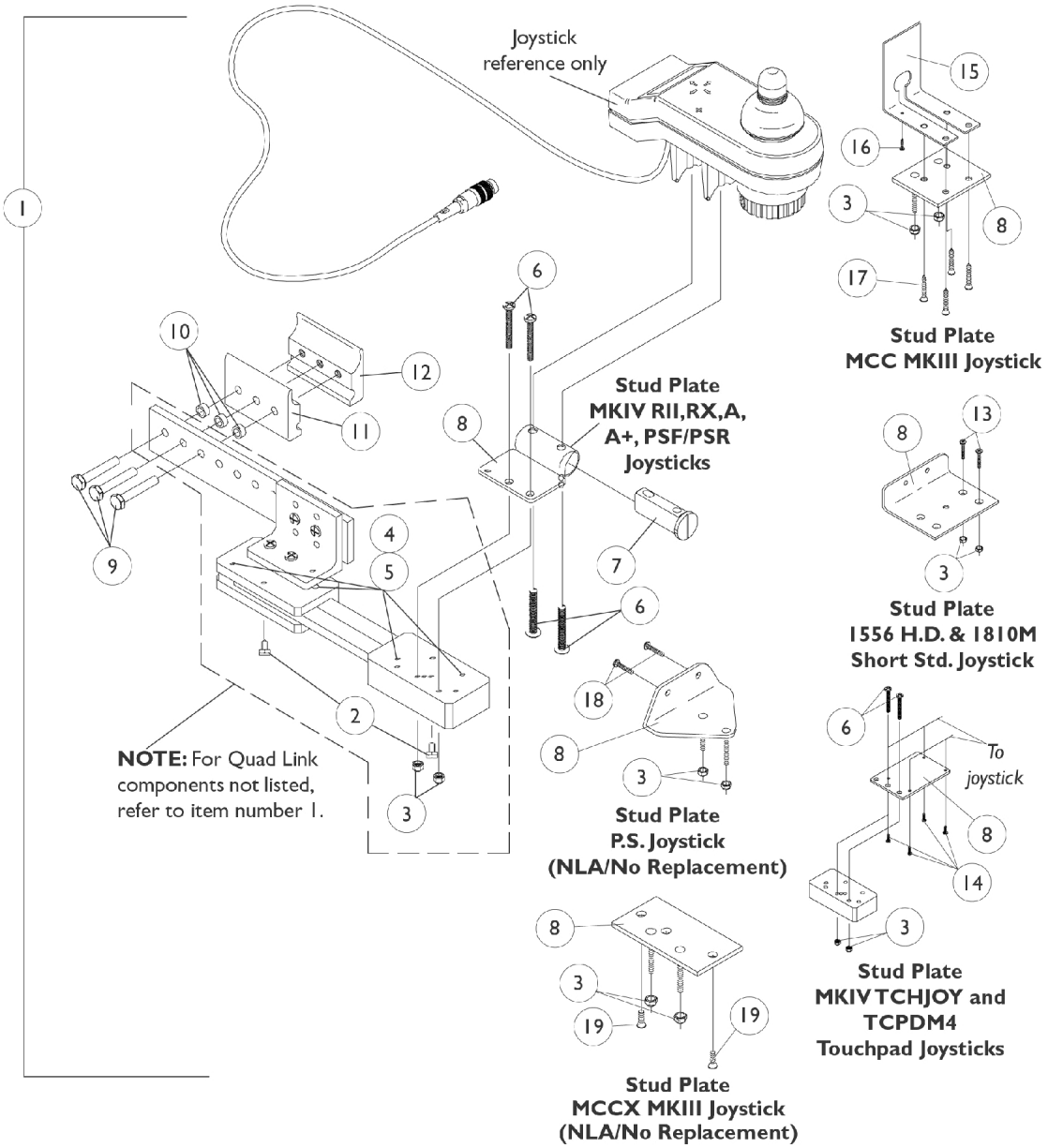

Quad Link Assembly
(Before 4/07/06)

Item Number	Note	Part Number	Description	Quantity Per Package	Quantity Per Assembly
1	A	1027222-NLA	NLA - Kit, Quad Link Assembly - Right For MCC MKIII	1	1
2			NLA - Ball Plunger Assembly with Lock Washer	2	1
3			Locknut (#10-32)	1	2
4			NLA - Screw, Cap, Socket Head (#10-32 x 1/2")	1	4
5			NLA - Bushing, Bronze (3/16 x 1/4 x 1/4")	1	4
8			NLA - Plate, Stud, Quad Link MCC MKIII	1	1
9			Screw, Hex Head (1/4-20 x 1-1/2")	1	3
10			NLA - Spacer (1/4 x 3/8 x 3/16")	1	3
11			Half Clamp, Non-Threaded Holes	1	1
12			NLA - Half Clamp, Threaded Holes	1	1
15			NLA - Plate, Cover, MCC MKIII Joystick	1	1
16			NLA - Screw, Phillips Pan Head (#4 x 3/8")	1	1
17			NLA - Screw, Phillips Flat Head (#6 x 5/8")	1	4
1	B	1052402-NLA	NLA - Kit, Quad Link Assembly - Right	1	1
2			NLA - Ball Plunger Assembly with Lock Washer	2	1
3			Locknut (#10-32)	1	2
4			NLA - Screw, Cap, Socket Head (#10-32 x 1/2")	1	4
5			NLA - Bushing, Bronze (3/16 x 1/4 x 1/4")	1	4
6			Screw, Phillips Pan Head (#10-32 x 1-1/8")	1	4
7			Spacer, Joystick Tube, Black	1	1
8			NLA - Stud Plate, Quad Link	1	1
9			Screw, Hex Head (1/4-20 x 1-1/2")	1	3
10			NLA - Spacer (1/4 x 3/8 x 3/16")	1	3
11			Half Clamp, Non-Threaded Holes	1	1
12			NLA - Half Clamp, Threaded Holes	1	1
1	B	1115372-NLA	NLA - Kit, Quad Link Assembly - Left	1	1
2			NLA - Ball Plunger Assembly with Lock Washer	2	1
3			Locknut (#10-32)	1	2
4			NLA - Screw, Cap, Socket Head (#10-32 x 1/2")	1	4
5			NLA - Bushing, Bronze (3/16 x 1/4 x 1/4")	1	4
6			Screw, Phillips Pan Head (#10-32 x 1-1/8")	1	4
7			Spacer, Joystick Tube, Black	1	1
8			NLA - Stud Plate, Quad Link	1	1
9			Screw, Hex Head (1/4-20 x 1-1/2")	1	3
10			NLA - Spacer (1/4 x 3/8 x 3/16")	1	3
11			Half Clamp, Non-Threaded Holes	1	1
12			NLA - Half Clamp, Threaded Holes	1	1
1	C,G	1034703-NLA	NLA - Kit, Quad Link Assembly - Right	1	1
2			NLA - Ball Plunger Assembly with Lock Washer	2	1
3			Locknut (#10-32)	1	2

Quad Link Assembly
(Before 4/07/06)

Item Number	Note	Part Number	Description	Quantity Per Package	Quantity Per Assembly
4			NLA - Screw, Cap, Socket Head (#10-32 x 1/2")	1	4
5			NLA - Bushing, Bronze (3/16 x 1/4 x 1/4")	1	4
8			Plate, Stud, Quad Link For 1556 Heavy Duty Joystick	1	1
9			Screw, Hex Head (1/4-20 x 1-1/2")	1	3
10			NLA - Spacer (1/4 x 3/8 x 3/16")	1	3
11			Half Clamp, Non-Threaded Holes	1	1
12			NLA - Half Clamp, Threaded Holes	1	1
13			Screw, Phillips Flat Head (#10-32 x 1-1/8")	1	2
1	C	1114866-NLA	NLA - Kit, Quad Link Assembly - Left	1	1
2			NLA - Ball Plunger Assembly with Lock Washer	2	1
3			Locknut (#10-32)	1	2
4			NLA - Screw, Cap, Socket Head (#10-32 x 1/2")	1	4
5			NLA - Bushing, Bronze (3/16 x 1/4 x 1/4")	1	4
8			Plate, Stud, Quad Link For 1556 Heavy Duty Joystick	1	1
9			Screw, Hex Head (1/4-20 x 1-1/2")	1	3
10			NLA - Spacer (1/4 x 3/8 x 3/16")	1	3
11			Half Clamp, Non-Threaded Holes	1	1
12			NLA - Half Clamp, Threaded Holes	1	1
13			Screw, Phillips Flat Head (#10-32 x 1-1/8")	1	2
1	D	1102027-NLA	NLA - Kit, Quad Link Assembly - Right For TCHJOY/TCPDM4 Touchpad	1	1
2			NLA - Ball Plunger Assembly with Lock Washer	2	1
3			Locknut (#10-32)	1	2
4			NLA - Screw, Cap, Socket Head (#10-32 x 1/2")	1	4
5			NLA - Bushing, Bronze (3/16 x 1/4 x 1/4")	1	4
6			Screw, Phillips Pan Head (#10-32 x 1-1/8")	1	2
8			NLA - Plate, Stud, Quad Link MKIV TCHJOY/TCPDM4	1	1
9			Screw, Hex Head (1/4-20 x 1-1/2")	1	3
10			NLA - Spacer (1/4 x 3/8 x 3/16")	1	3
11			Half Clamp, Non-Threaded Holes	1	1
12			NLA - Half Clamp, Threaded Holes	1	1
14			NLA - Screw, Phillips Flat Head Countersunk (#4-40 x 3/8")	1	4
1	E	1106191-NLA	NLA - Kit, Quad Link Assembly - Right For PS joystick	1	1
2			NLA - Ball Plunger Assembly with Lock Washer	2	1
3			Locknut (#10-32)	1	2
4			NLA - Screw, Cap, Socket Head (#10-32 x 1/2")	1	4
5			NLA - Bushing, Bronze (3/16 x 1/4 x 1/4")	1	4

Quad Link Assembly
(Before 4/07/06)

Item Number	Note	Part Number	Description	Quantity Per Package	Quantity Per Assembly
8			NLA - Plate, Stud, Quad Link P.S. Joystick	1	1
9			Screw, Hex Head (1/4-20 x 1-1/2")	1	3
10			NLA - Spacer (1/4 x 3/8 x 3/16")	1	3
11			Half Clamp, Non-Threaded Holes	1	1
12			NLA - Half Clamp, Threaded Holes	1	1
18			Screw, Phillips Pan Head (#10-32 x 11/16")	1	2
1	F	1077298-NLA	Kit, Quad Link Assembly - Right For MCCX MKIII	1	1
2			NLA - Ball Plunger Assembly with Lock Washer	2	1
3			Locknut (#10-32)	1	2
4			NLA - Screw, Cap, Socket Head (#10-32 x 1/2")	1	4
5			NLA - Bushing, Bronze (3/16 x 1/4 x 1/4")	1	4
8			NLA - Plate, Stud, Quad Link	1	1
9			Screw, Hex Head (1/4-20 x 1-1/2")	1	3
10			NLA - Spacer (1/4 x 3/8 x 3/16")	1	3
11			Half Clamp, Non-Threaded Holes	1	1
12			NLA - Half Clamp, Threaded Holes	1	1
19			Screw, Phillips Flat Head (#10-32 x 1-1/8")	1	2
2		1114863-NLA	NLA - Ball Plunger Assembly with Lock Washer	2	1

NOTE:
A - Includes the Quad Link, items 2-5, 8-12, 15-17 and used with a MCC MKIII. For left side mounted Quad Link, order as a special.
B - Includes the Quad Link, items 2-12 and used with MKIV RII, RX, A, A+, PSF/PSR joysticks.
C - Includes the Quad Link, items 2-5, 8-13 and used with a 1810 STD. and 1556 Heavy Duty joystick.
D - Includes the Quad Link, items 2-6, 8-12, 14 and used with MKIV TCHJOY/TCPDM4 joysticks. For left side mounted Quad Link, order as a special.
E - Includes the Quad Link, items 2-5, 8-12, 18 and used with a PS joystick.
F - Includes the Quad Link, items 2-5, 8-12, 19 and used with a MCCX MKIII joystick.
G - Quad Link Assembly is no longer available. Please see Quad Link Assembly (After 4/06/06) category and use new Quad LInk design as a replacement.

Quad Link (QLA)
(After 4/06/06)

When converting an old style Quad Link that attaches to a mounting plate or (a Flex Tube or Touch Pad joystick tube) is currently on the chair then order the following:
Quad Link Mtg. Hdwr. (item 4), Quad Link (item 1) & Ht. Adj. Joystick Tube Clamp (item 11)
NOTE: Substitute (item 4) with 2 ea. of the PPH Screws (item 5) when an offset joystick tube is currently on the chair. Additional Joystick Mtg. Hdwr. must be ordered when a 1556 Heavy Duty, 1810M Joystick and TCPD Touch Pad are used.

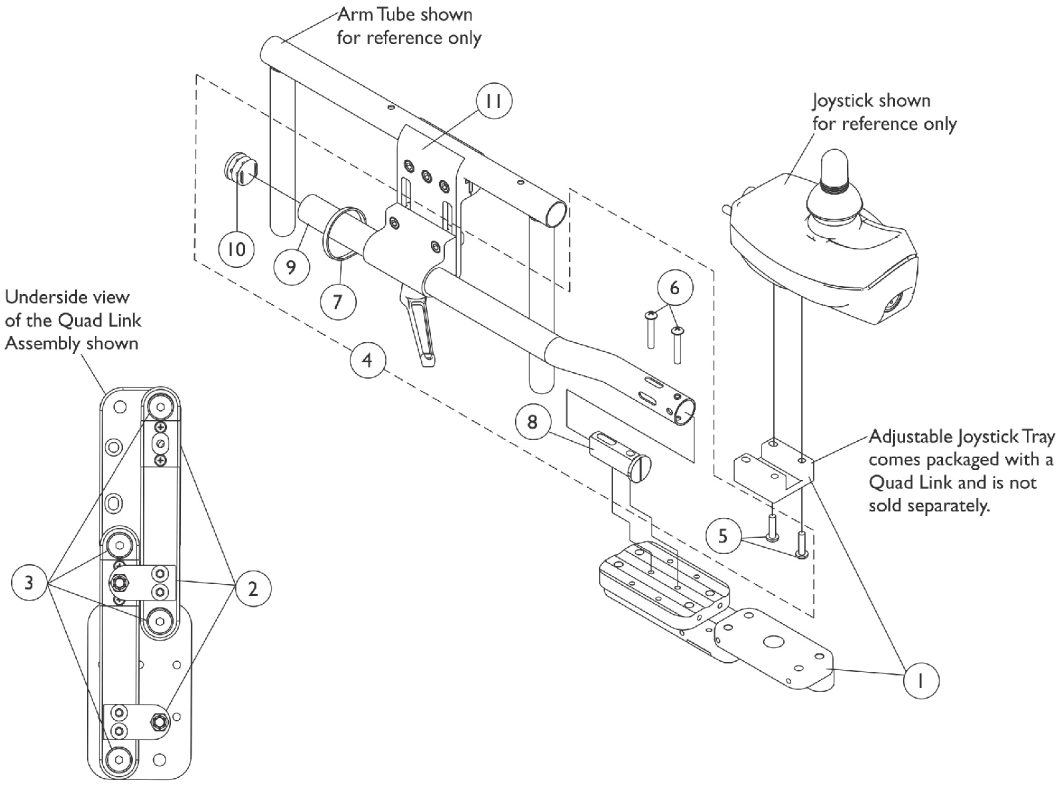

Screw Fastener and Quad Link Latch Hardware

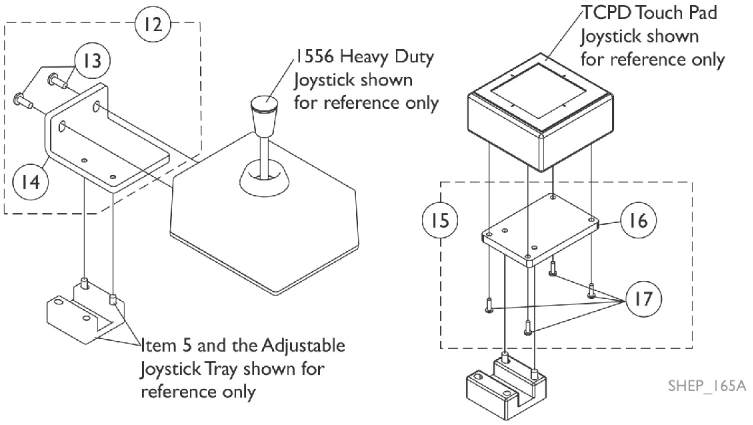

Quad Link (QLA)
(After 4/06/06)

When converting an old style Quad Link that attaches to a mounting plate or (a Flex Tube or Touch Pad joystick tube) is currently on the chair then order the following:
Quad Link Mtg. Hdwr. (item 4), Quad Link (item 1) & Ht. Adj. Joystick Tube Clamp (item 11)
NOTE: Substitute (item 4) with 2 ea. of the PPH Screws (item 5) when an offset joystick tube is currently on the chair. Additional Joystick Mtg. Hdwr. must be ordered when a 1556 Heavy Duty, 1810M Joystick and TCPD Touch Pad are used.

Item Number	Note	Part Number	Description	Quantity Per	
				Package	Assembly
1	H,H1	1140896	Quad Link w/ Adjustable Joystick Tray (QLA) and Instruction Sheet - Right	1	1
1	H,H1	1140897	Quad Link w/ Adjustable Joystick Tray (QLA) and Instruction Sheet - Left	1	1
2	A	1140425	Kit, Quad Link Latch Hardware	1	1
3	B	1140424-NLA	NLA - Kit, Quad Link Screw Fastener Hardware	1	1
4	C,C1	1139416	Kit, ASBA/ADJASBA Quad Link Mounting Hardware	1	1
5			Screw, Phillips Pan Head w/ Patch (#10-32 x 3/4")	1	2
6			Screw, Phillips Pan Head (#10-32 x 1-1/8")	1	2
7			Tie Wrap (11-1/2" L)	1	1
8			Spacer, Joystick Tube, Black	1	1
9			Tube, Joystick Offset (1/2")	1	1
10			Plug Button, Black (7/8")	1	1
5		1105414	Screw, Phillips Pan Head w/ Patch (#10-32 x 3/4")	1	2
11	G	1139422	Clamp, Height Adjustable Joystick Tube (ARM250)	1	1
12	D	1139925-NLA	NLA - Kit, 1556 Heavy Duty Joystick To Quad Link Mounting Hardware	1	1
13			Screw, Phillips Pan Head (#10-32 x 1/2")	1	2
14			NLA - Plate, 1556 HD Joystick Quad Link	1	1
15	E	1139683-NLA	NLA - Kit, TCPD Touch Pad To Quad Link Mounting Hardware	1	1
16			Plate, TCPD Touch Pad Quad Link	1	1
17			Screw, Phillips Pan Head (#4-40 x 3/8")	1	4
	F	1134844	Instruction Sheet, Quad Link	1	1

NOTE:
A - Latch Kit includes 4 ea. Button Head Cap Screws (10-32 x 3/8"), 2 ea. Latch Spring Assembly, 4 ea. Phillips Flat C'Sunk Head Screws, 2 ea. Spring Catch Plates, 2 ea. Socket Head Set Screws (10-32 x 3/8")
B - Screw Fastener Kit includes 4 ea. Socket Head Shoulder Screws (3/8 x 3/8"), 2 ea. Socket Head Cap Screws (1/4-20 x 3/8"), 2 ea. Socket Head Set Screws (1/4-20 x 1/2"), 4 ea. Socket Head Set Screws (10-32 x 1/8")
C - Includes items 5-10. The Quad Link Mounting Hardware accommodates MKIV RII, RX, A, A+, PSF/PSR joysticks.
C1 - When ordering the Quad Link for the first time, Additional hardware is required for 1556 Heavy Duty and TCPD Touch Pad joysticks. See pictorial for reference.
D - Includes items 13 and 14. Can be used with an 1810M Std. Joystick also
E - Includes items 16 and 17
F - Not Shown
G - Individual components are non-saleable
H - The 4-Way Switch Mounting Plate has changed and may be required when converting a Quad Link assembled to a mounting plate over to a Quad Link introduced after 4/06/06.
H1 - When a Single Function Toggle Switch (SFT) is used, the (SFT) switch mounting hardware for a Joystick Tube will need to be ordered

Midline Assembly

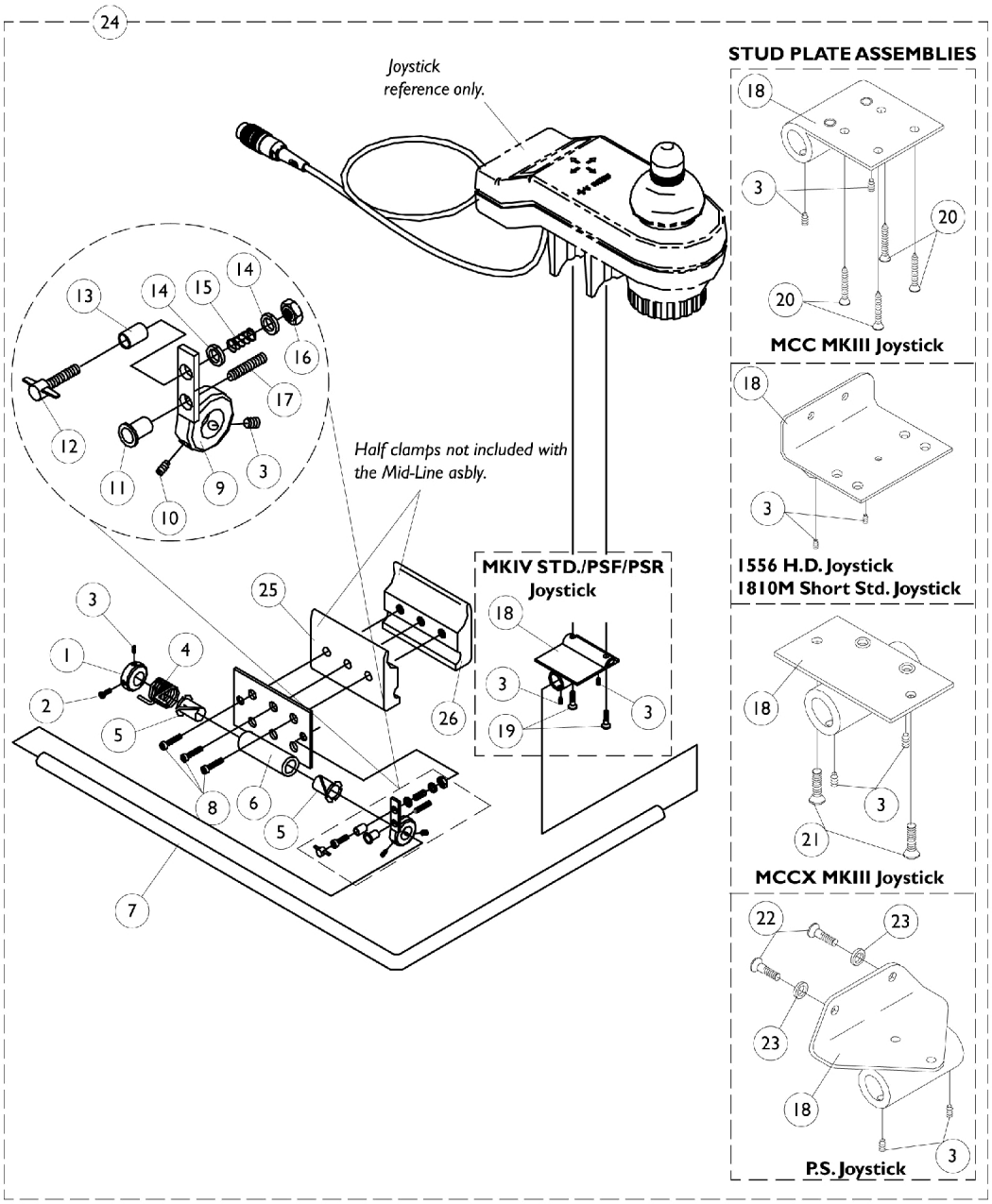

Midline Assembly

Item Number	Note	Part Number	Description	Quantity Per Package	Quantity Per Assembly
1		0063100-NLA	NLA - Collar, 2 Holes	1	1
2		0223506-NLA	NLA - Screw, Socket, Cap, Button Head (1/4-20 x 1/2")	1	1
3		1077307-NLA	NLA - Screw, Set (1/4-20 x 1/4")	1	4
4		0063000-NLA	NLA - Spring, Assist	1	1
5		1077306-NLA	NLA - Bearing, Nylon (1/2")	1	2
6		0063402-NLA	NLA - Plate, Mounting	1	1
7		0191001-NLA	NLA - Bar, Mounting	1	1
8		7930304-NLA	NLA - Screw, Socket Head (1/4-20 x 1-1/4")	25	3
9		0063202-NLA	NLA - Weldment, Collar	1	1
10		1077308-NLA	NLA - Screw, Set (1/4-20 x 1/2")	1	1
11		0053200	Rivnut (1/4-20 x 11/16")	1	1
12		1077321-NLA	NLA - Knob, Tee (1/4-20 x 1-3/4")	1	1
13		0267606-NLA	NLA - Spacer (17/64 x 21/64 x 1/2")	1	1
14		0050100-NLA	NLA - Washer, Nylon Flat (1/4 x 1/2 x 1/16")	1	2
15		0064600-NLA	NLA - Spring, Compression	1	1
16		7930333	Locknut (1/4-20)	25	1
17		1077309-NLA	NLA - Screw, Set (1/4-20 x 1")	1	1
18		0312524-NLA	NLA - Plate, Mounting, MKIV Std/ PSF/ PSR Joystick	1	1
18		1077310-NLA	NLA - Plate, Mounting, MCC MKIII Std. Joystick	1	1
18		1077311-NLA	NLA - Plate, Mounting, 1556 H.D. / 1810M Short Std. Joystick	1	1
18		1077312-NLA	NLA - Plate, Mounting MCCX MKIII Joysticks	1	1
18		0314602-NLA	NLA - Plate, Mounting, P.S. Joysticks	1	1
19		1077249-NLA	NLA - Screw, Socket Head (#10-32 x 3/4")	1	2
20		0068000-NLA	NLA - Screw, Phillips Flat Head (#6 x 5/8")	1	4
21		0106600-NLA	NLA - Screw Phillips Flat Head (#8-32 x 1/2")	1	2
22		1025716	Screw, Phillips Pan Head (#10-32 x 11/16")	1	2
23		0224806-NLA	NLA - Washer (#10)	1	2
24		1077313-NLA	NLA - Mid-Line Assembly, Less Half Clamps, MKIV Std./ PSF/ PSR Joystick	1	1
24		1077314-NLA	NLA - Mid-Line Assembly, Less Half Clamps, MCC MKIII Std.Joystick	1	1
24		1077315-NLA	NLA - Mid-Line Assembly, Less Half Clamps, 1556 Heavy Duty/ 1810M Short Std. Joystick	1	1
24		1077316	Mid-Line Assembly, Less Half Clamps, MCCX MKIIIJoystick	1	1
24		1077317-NLA	NLA - Mid-Line Assembly, Less Half Clamps, P.S. Joystick	1	1
25		1027266	Half Clamp, Non-Threaded Holes	1	1
26		1027267-NLA	NLA - Half Clamp, Threaded Holes	1	1

Front Rigging Hanger Assembly
Sector, Genius, Pin, AML4A Style

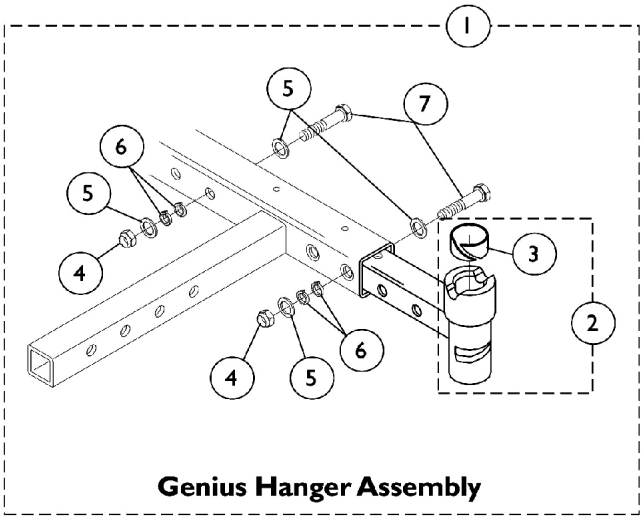

Genius Hanger Assembly

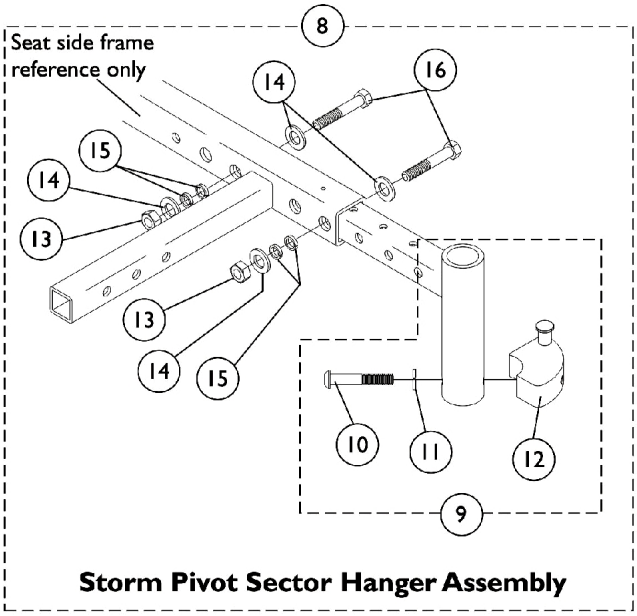

Storm Pivot Sector Hanger Assembly

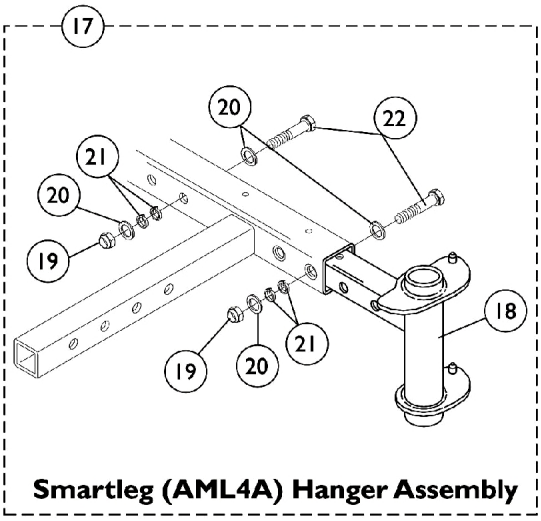

Smartleg (AML4A) Hanger Assembly

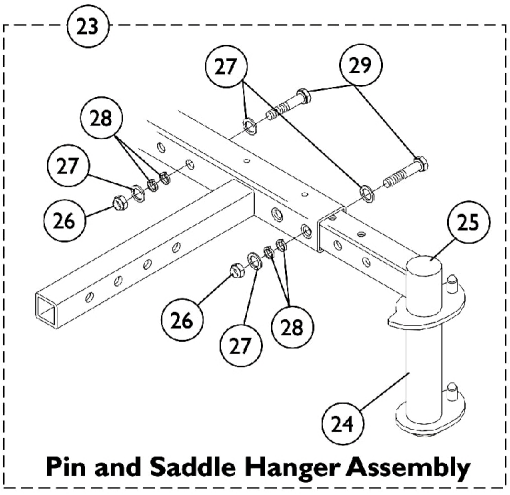

Pin and Saddle Hanger Assembly

Front Rigging Hanger Assembly
Sector, Genius, Pin, AML4A Style

Item Number	Note	Part Number	Description	Quantity Per Package	Quantity Per Assembly
1	A	1072925-NLA	NLA - Kit, Front Rigging Hanger Assembly w/ Hardware, Genius Style, Black - Right	1	1
1	A	1072924-NLA	NLA - Kit, Front Rigging Hanger Assembly w/ Hardware, Genius Style, Black - Left	1	1
1	A	1072926-NLA	NLA - Kit, Front Rigging Hanger Assembly w/ Hardware, Genius Style, Black (Pair)	2	1
2	B	1072923-NLA	NLA - Front Rigging Hanger Assembly w/ Nylon Liner, Genius - Right	1	1
2	B	1072922-NLA	NLA - Front Rigging Hanger Assembly w/ Nylon Liner, Genius - Left	1	1
3		0181000-NLA	NLA - Liner, Nylon (3/4")	1	1
4		1025736	Locknut (1/4-20)	1	2
5		0050406	Washer, Flat (1/4 x 5/8 x 1/16")	1	4
6		0050506-NLA	NLA - Lockwasher, High Collar, Split (1/4")	1	4
7		1024793-NLA	NLA - Screw, Hex Head (1/4-20 x 1-3/4")	1	2
8	C	1072724-NLA	NLA - Kit, Front Rigging Hanger Assembly w/ Hardware, Center Pivot, Storm, Black - Right	1	1
8	C	1072726-NLA	NLA - Kit, Front Rigging Hanger Assembly w/ Hardware, Center Pivot, Storm, Black - Left	1	1
8	C	0197500-NLA	NLA - Kit, Front Rigging Hanger Assembly w/ Hardware, Storm, Black (Pair)	2	1
9	D	1072722-NLA	NLA - Front Rigging Hanger Assembly w/ Sector Block, Center Pivot, Storm, Black - Right	1	1
9	D	1072723-NLA	NLA - Front Rigging Hanger Assembly w/ Sector Block, Center Pivot, Storm, Black - Left	1	1
10		0139506	Screw, Button Head, Socket (1/4-20 x 1-1/2")	1	1
11		1007453	Lockwasher, Split (1/4")	1	1
12		0117000	Block, Sector - Right	1	1
12		0117100	Block, Sector - Left	1	1
13		1025736	Locknut (1/4-20)	1	2
14		0050406	Washer, Flat (1/4 x 5/8 x 1/16")	1	4
15		0050506-NLA	NLA - Lockwasher, High Collar, Split (1/4")	1	4
16		1024793-NLA	NLA - Screw, Hex Head (1/4-20 x 1-3/4")	1	2
17	E	1072906	Kit, Front Rigging Hanger Assembly w/ Hardware, Smartleg, Black (AML4A) - Right	1	1
17	E	1072907	Kit, Front Rigging Hanger Assembly w/ Hardware, Smartleg, Black (AML4A) - Left	1	1
17	E	1072743	Kit, Front Rigging Hanger Assembly w/ Hardware, Smartleg, Black (AML4A) (Pair)	2	1
18		0117302-NLA	NLA - Hanger, Front Rigging, Smartleg (AML4A), Black - Right	1	1
18		0117402-NLA	NLA - Hanger, Front Rigging, Smartleg (AML4A), Black - Left	1	1
19		1025736	Locknut (1/4-20)	1	2
20		0050406	Washer, Flat (1/4 x 5/8 x 1/16")	1	4
21		0050506-NLA	NLA - Lockwasher, High Collar, Split (1/4")	1	4

Front Rigging Hanger Assembly

Sector, Genius, Pin, AML4A Style

Item Number	Note	Part Number	Description	Quantity Per Package	Quantity Per Assembly
22		1024793-NLA	NLA - Screw, Hex Head (1/4-20 x 1-3/4")	1	2
23	F	1081425-NLA	NLA - Kit, Front Rigging Hanger Assembly w/ Hardware, Pin Style, Black - Right	1	1
23	F	1081426-NLA	NLA - Kit, Front Rigging Hanger Assembly w/ Hardware, Pin Style, Black - Left	1	1
23	F	1081446-NLA	NLA - Kit, Front Rigging Hanger Assembly w/ Hardware, Pin Style, Black (Pair)	2	1
24		1078020-NLA	NLA - Hanger, Front Rigging, Pin Style, Black - Right	1	1
24		1078021-NLA	NLA - Hanger, Front Rigging, Pin Style, Black - Left	1	1
25		1027097	Plug Button, Black (3/4")	1	1
26		1025736	Locknut (1/4-20)	1	2
27		0050406	Washer, Flat (1/4 x 5/8 x 1/16")	1	4
28		0050506-NLA	NLA - Lockwasher, High Collar, Split (1/4")	1	4
29		1024793-NLA	NLA - Screw, Hex Head (1/4-20 x 1-3/4")	1	2

NOTE:
A - Includes front rigging hanger, items 2 and 4-7
B - Includes front riging hanger and item 3
C - Includes front rigging hanger, items 9 and 13-16
D - Includes front rigging hanger and items 10-12
E - Includes items 18-22
F - Includes items 24-29

Front Rigging Hanger Assembly

Sector, Genius, Pin, AML4A Style (Basic Recline 4XP)

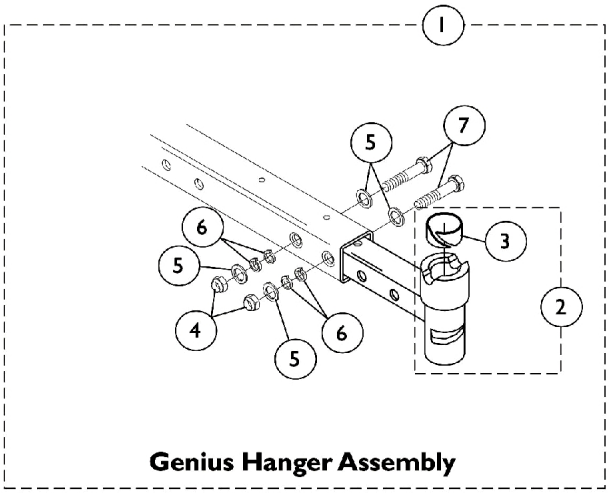

Genius Hanger Assembly

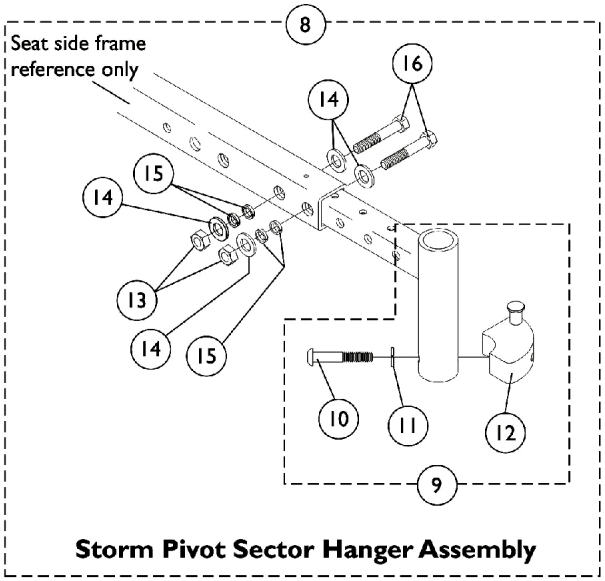

Storm Pivot Sector Hanger Assembly

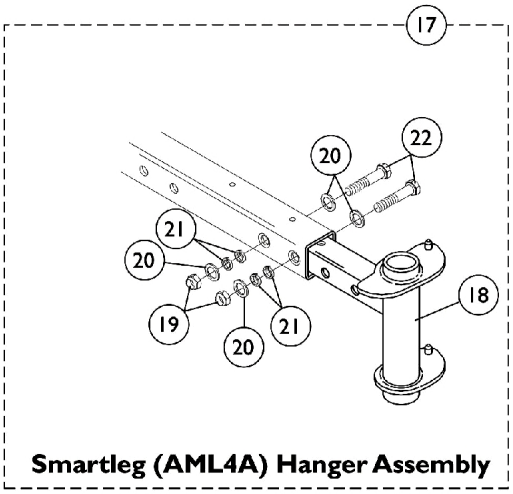

Smartleg (AML4A) Hanger Assembly

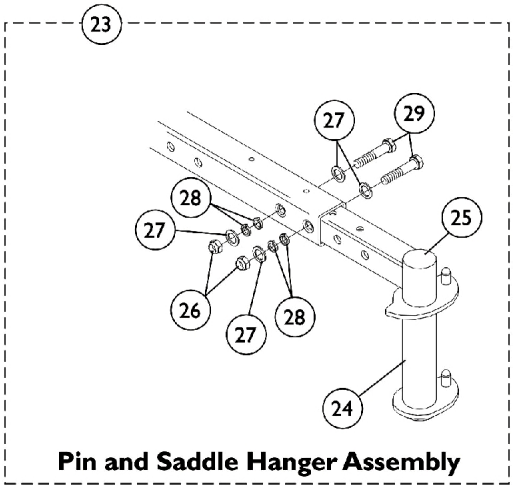

Pin and Saddle Hanger Assembly

Front Rigging Hanger Assembly

Sector, Genius, Pin, AML4A Style (Basic Recline 4XP)

Item Number	Note	Part Number	Description	Quantity Per Package	Quantity Per Assembly
1	A	1077393	Kit, Front Rigging Hanger Assembly w/ Hardware, Genius Style, Black (4XP) - Right	1	1
1	A	1077394	Kit, Front Rigging Hanger Assembly w/ Hardware, Genius Style, Black (4XP) - Left	1	1
1	A	1077395-NLA	NLA - Kit, Front Rigging Hanger Assembly w/ Hardware, Genius Style, Black (Pair)	2	1
2	B	1072923-NLA	NLA - Front Rigging Hanger Assembly w/ Nylon Liner, Genius - Right	1	1
2	B	1072922-NLA	NLA - Front Rigging Hanger Assembly w/ Nylon Liner, Genius - Left	1	1
3		0181000-NLA	NLA - Liner, Nylon (3/4")	1	1
4		1025736	Locknut (1/4-20)	1	2
5		0050406	Washer, Flat (1/4 x 5/8 x 1/16")	1	4
6		0050506-NLA	NLA - Lockwasher, High Collar, Split (1/4")	1	4
7		1024793-NLA	NLA - Screw, Hex Head (1/4-20 x 1-3/4")	1	2
8	C	1077399-NLA	NLA - Kit, Front Rigging Hanger Assembly w/ Hardware, Storm, Black (4XP) - Right	1	1
8	C	1077400-NLA	NLA - Kit, Front Rigging Hanger Assembly w/ Hardware, Storm, Black (4XP) - Left	1	1
8	C	1077401-NLA	NLA - Kit, Front Rigging Hanger Assembly w/ Hardware, Storm, Black (Pair)	2	1
9	D	1072722-NLA	NLA - Front Rigging Hanger Assembly w/ Sector Block, Center Pivot, Storm, Black - Right	1	1
9	D	1072723-NLA	NLA - Front Rigging Hanger Assembly w/ Sector Block, Center Pivot, Storm, Black - Left	1	1
10		0139506	Screw, Button Head, Socket (1/4-20 x 1-1/2")	1	1
11		1007453	Lockwasher, Split (1/4")	1	1
12		0117000	Block, Sector - Right	1	1
12		0117100	Block, Sector - Left	1	1
13		1025736	Locknut (1/4-20)	1	2
14		0050406	Washer, Flat (1/4 x 5/8 x 1/16")	1	4
15		0050506-NLA	NLA - Lockwasher, High Collar, Split (1/4")	1	4
16		1024793-NLA	NLA - Screw, Hex Head (1/4-20 x 1-3/4")	1	2
17	E	1072906	Kit, Front Rigging Hanger Assembly w/ Hardware, Smartleg, Black (AML4A) - Right	1	1
17	E	1072907	Kit, Front Rigging Hanger Assembly w/ Hardware, Smartleg, Black (AML4A) - Left	1	1
17	E	1077398	Kit, Front Rigging Hanger Assembly w/ Hardware, Smartleg, Black (AML4A) (Pair)	2	1
18		0117302-NLA	NLA - Hanger, Front Rigging, Smartleg (AML4A), Black - Right	1	1
18		0117402-NLA	NLA - Hanger, Front Rigging, Smartleg (AML4A), Black - Left	1	1
19		1025736	Locknut (1/4-20)	1	2
20		0050406	Washer, Flat (1/4 x 5/8 x 1/16")	1	4
21		0050506-NLA	NLA - Lockwasher, High Collar, Split (1/4")	1	4

Front Rigging Hanger Assembly

Sector, Genius, Pin, AML4A Style (Basic Recline 4XP)

Item Number	Note	Part Number	Description	Quantity Per	
				Package	Assembly
22		1024793-NLA	NLA - Screw, Hex Head (1/4-20 x 1-3/4")	1	2
23	F	1081425-NLA	NLA - Kit, Front Rigging Hanger Assembly w/ Hardware, Pin Style, Black - Right	1	1
23	F	1081426-NLA	NLA - Kit, Front Rigging Hanger Assembly w/ Hardware, Pin Style, Black - Left	1	1
23	F	1081446-NLA	NLA - Kit, Front Rigging Hanger Assembly w/ Hardware, Pin Style, Black (Pair)	2	1
24		1078020-NLA	NLA - Hanger, Front Rigging, Pin Style, Black - Right	1	1
24		1078021-NLA	NLA - Hanger, Front Rigging, Pin Style, Black - Left	1	1
25		1027097	Plug Button, Black (3/4")	1	1
26		1025736	Locknut (1/4-20)	1	2
27		0050406	Washer, Flat (1/4 x 5/8 x 1/16")	1	4
28		0050506-NLA	NLA - Lockwasher, High Collar, Split (1/4")	1	4
29		1024793-NLA	NLA - Screw, Hex Head (1/4-20 x 1-3/4")	1	2

NOTE:
A - Includes front rigging hanger, items 2 and 4-7
B - Includes front rigging hanger and item 3
C - Includes front rigging hanger, items 9 and 13-16
D - Includes front rigging hanger and items 10-12
E - Includes items 18-22
F - Includes items 24-29

AT5544 Legrest (Power)
Tilt Only or Tilt/Recline and Recline Only

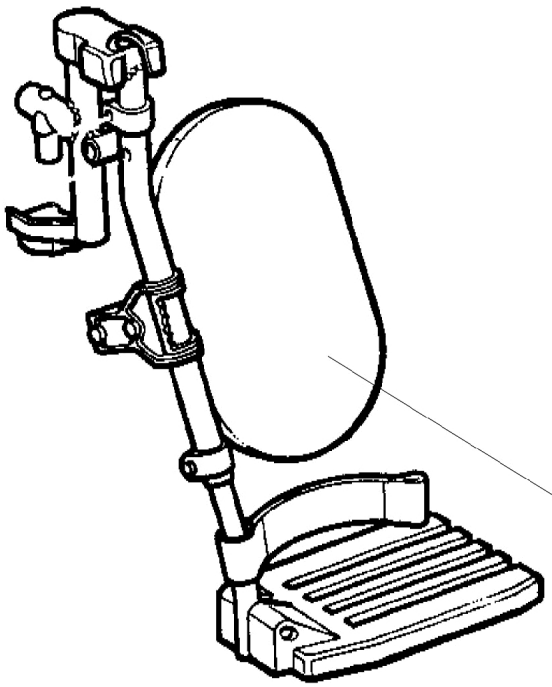

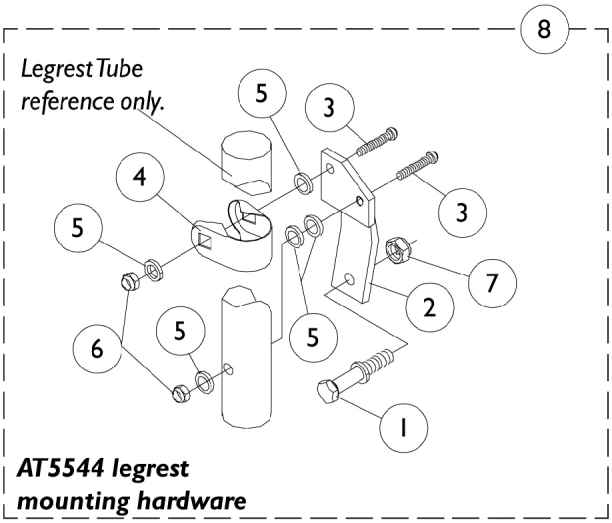

AT5544 rigging shown for reference only. See 2G Storm Series™ parts catalog form number 97-188 for legrest components.

Item Number	Note	Part Number	Description	Quantity Per	
				Package	Assembly
1		0025306-NLA	NLA - Push Pin, AT5544	1	1
2		0025602-NLA	NLA - Bracket, Push - Right	1	1
2		0025502-NLA	NLA - Bracket, Push - Left	1	1
3		0055206-NLA	NLA - Screw, Cap, Button Head, Socket (5/16-18 x 1-3/4")	1	2
4		0055900-NLA	NLA - U-Clamp (7/8")	1	1
5		0054806-NLA	NLA - Washer, Flat (11/32 x 11/16 x 1/16")	1	5
6		0054906	Locknut, High Profile (5/16-18)	1	2
7		0054106-NLA	NLA - Locknut, High Profile (3/8-16)	1	1
8	A	1077516-NLA	NLA - Hardware, Legrest Mounting, AT5554 - Right	1	1
8	A	1077517-NLA	NLA - Hardware, Legrest Mounting, AT5554 - Left	1	1

NOTE: A - Includes items 1-7

Power Elevating Legrest (4XP)
Genius and AT5544
Basic Recline (4XP)

NOTE: Legrest components can be found on the "Genius Legrest" page for Genius and form number 97-188 2G Storm Series parts catalog for Invacare AT5544.

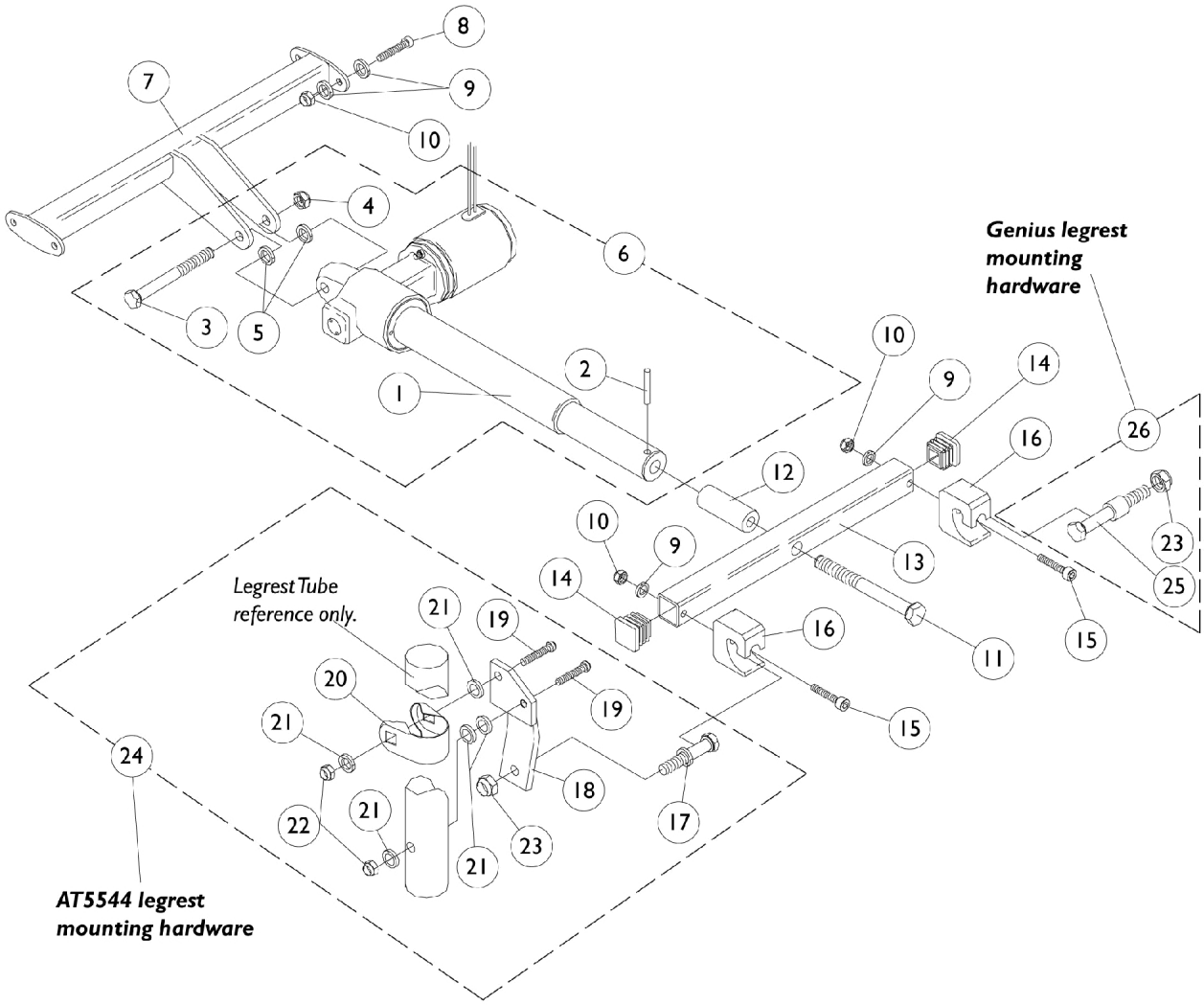

Power Elevating Legrest (4XP)
Genius and AT5544
Basic Recline (4XP)

Item Number	Note	Part Number	Description	Quantity Per	
				Package	Assembly
1		0239000-NLA	NLA - Actuator Motor, Power Leg, 4XP (4" Stroke)	1	1
2		0053600-NLA	NLA - Pin, Roll (1/8 x 1-1/8")	1	1
3		1106223	Screw, Socket Head (3/8-16 x 2-1/2")	1	1
4		0054106-NLA	NLA - Locknut, High Profile (3/8-16)	1	1
5		0053900-NLA	NLA - Washer, Nylon (3/8 x 13/16 x 1/16")	1	2
6		1077509	Actuator Motor w/ Hardware, Power Leg, 4XP (4" Stroke)	1	1
7		0236102-NLA	NLA - Brace, Cross, Power Leg - Rear (4XP) (16" W)	1	1
7		0236202-NLA	NLA - Brace, Cross, Power Leg - Rear (4XP) (18" W)	1	1
8		1024793-NLA	NLA - Screw, Hex Head (1/4-20 x 1-3/4")	1	4
9		0050406	Washer, Flat (1/4 x 5/8 x 1/16")	1	10
10		7930333	Locknut (1/4-20)	1	6
11	C	0238206-NLA	NLA - Screw, Hex Head (1/2-20 x 2") (For 16" Seat Depth)	1	1
11	D	0238306-NLA	NLA - Screw, Hex Head (1/2-20 x 4") (For 18" Seat Depth)	1	1
11	E	0238406	Screw, Hex Head (1/2-20 x 6") (For 20" Seat Depth)	1	1
12	D	0235622-NLA	NLA - Actuator Extension, 2" (18" Seat Depth)	1	1
12	E	0235722-NLA	NLA - Actuator Extension, 4" (20" Seat Depth)	1	1
13		0235802-NLA	NLA - Bar, Push, Power Leg (4XP) (16" W)	1	1
13		0235902-NLA	NLA - Push Bar, Power Leg (4XP) 18" Wide	1	1
14		1071237	Plug Button, Square, Black (1")	1	2
15		0132206-NLA	NLA - Screw, Allen Head (1/4-20 x 1-3/4")	1	2
16		0026400-NLA	NLA - Receptacle, Power Legrest	1	2
17		0025306-NLA	NLA - Push Pin, AT5544	1	1
18		0236602	Bracket, Push - Right	1	1
18		0236502	Bracket, Push - Left	1	1
19		0055206-NLA	NLA - Screw, Cap, Button Head, Socket (5/16-18 x 1-3/4")	1	4
20		0055900-NLA	NLA - U-Clamp (7/8")	1	2
21		0054806-NLA	NLA - Washer, Flat (11/32 x 11/16 x 1/16")	1	10
22		0054906	Locknut, High Profile (5/16-18)	1	4
23		0054106-NLA	NLA - Locknut, High Profile (3/8-16)	1	2
24	A	1084181	Hardware, Legrest Mounting, AT5554 - Right	1	1
24	A	1084182	Hardware, Legrest Mounting, AT5554 - Left	1	1
25		0203906-NLA	NLA - Pin, Push, Inside Mount, Genius	1	2
26	B	1077518	Hardware, Legrest Mounting, Genius	1	2

Power Elevating Legrest (4XP)
Genius and AT5544
Basic Recline (4XP)

NOTE:	A - Includes items 17-23
	B - Includes items 23, 25
	C - 16" Seat Depth
	D - 18" Seat Depth
	E - 20" Seat Depth

Genius Legrest

Tilt Only or Basic Recline 4XP or Tilt/Recline & Recline Only

NOTE: Mechanical elevation for Basic recline 4XP. Power elevation for Tilt Only and Tilt/Recline, Recline Only.

Due to a change to the Legrest Calf Pad size made on 4/23/12, you must also order the hardware kit (1109613) when ordering replacement Calf Pads.

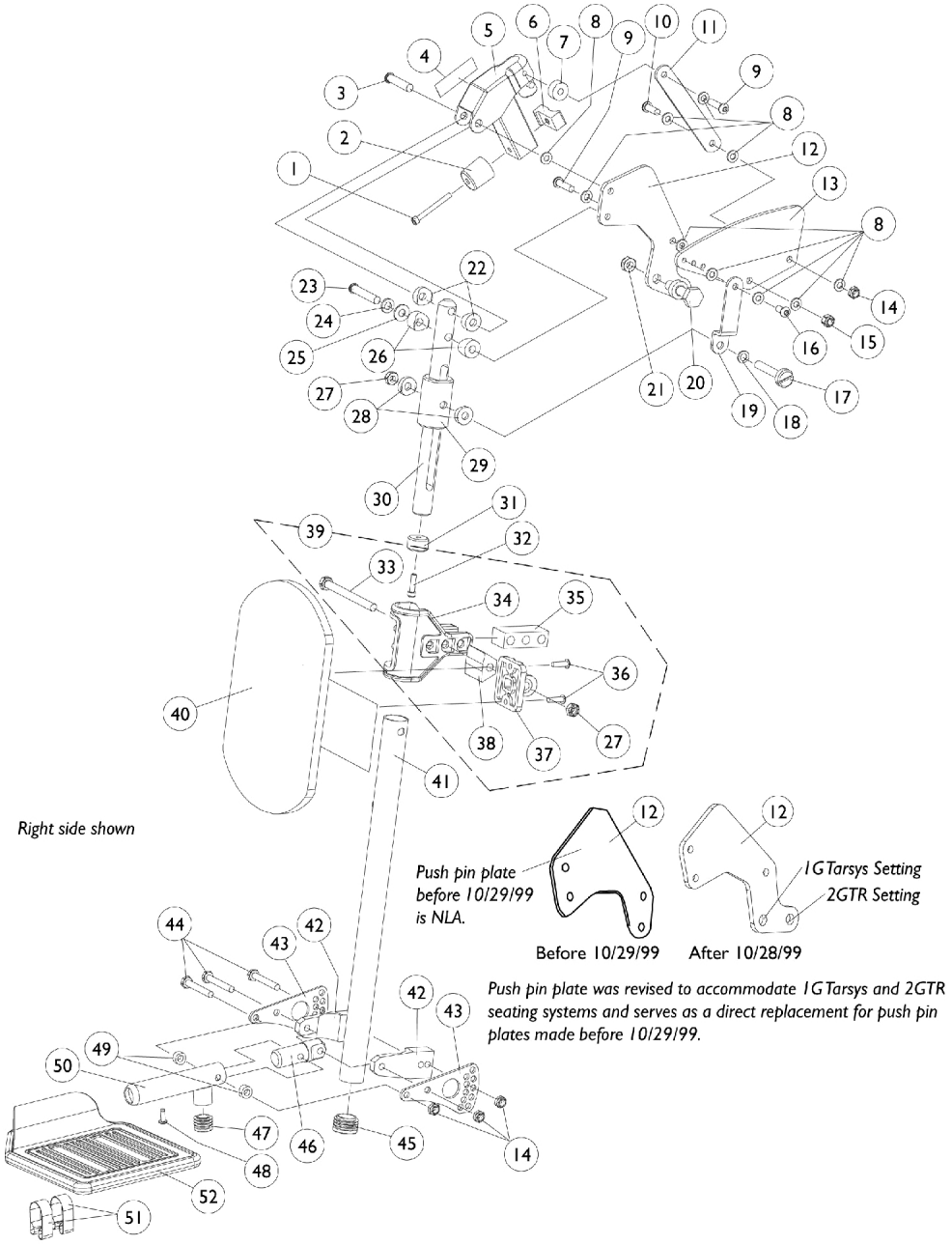

Genius Legrest

Tilt Only or Basic Recline 4XP or Tilt/Recline & Recline Only

NOTE: Mechanical elevation for Basic recline 4XP. Power elevation for Tilt Only and Tilt/Recline, Recline Only.

Due to a change to the Legrest Calf Pad size made on 4/23/12, you must also order the hardware kit (1109613) when ordering replacement Calf Pads.

Item Number	Note	Part Number	Description	Quantity Per	
				Package	Assembly
1		1023966	Screw, Socket Head (#10-32 x 1-3/4")	1	1
2		0060000-NLA	NLA - Bumper, Rubber	1	1
3		0140406-NLA	NLA - Screw, Socket Head, Cap (5/16-18 x 1-1/2")	1	1
4		0061400-NLA	NLA - Decal, Warning Label Tie Down	1	1
5		0289824-NLA	NLA - Legrest Hanger Receptical w/ Dowel Pin Assembly, Black	1	1
6		1096649-NLA	NLA - Guide, Square w/ Brass Barb Insert	1	1
7		0176700-NLA	NLA - Bushing, Coved Latch Legrest Genius	1	1
8		0050100-NLA	NLA - Washer, Nylon Flat (1/4 x 1/2 x 1/16")	1	1
9		0051606-NLA	NLA - Screw, Cap, Button Head, Socket (1/4-20 x 1")	1	10
10		0052906-NLA	NLA - Screw, Socket Button Head (1/4-20 x 3/4")	1	2
11		0177802-NLA	NLA - Link, Black - Rear	1	3
12		1086987-NLA	NLA - Plate, Push Pin	1	1
13		0179202-NLA	NLA - Plate, Link	1	1
14		7930323-NLA	NLA - Package, Locknut (1/4-20)	1	1
15		7930333	Locknut (1/4-20)	25	4
16		0223506-NLA	NLA - Screw, Socket, Cap, Button Head (1/4-20 x 1/2")	25	1
17		0180506-NLA	NLA - Screw, Slotted, Pan Head (5/16-18 x 1-15/16")	1	1
18		0054700-NLA	NLA - Washer, Nylon (5/16 x 1/2 x 1/16")	1	2
19		0177702-NLA	NLA - Link, Black - Front	1	1
20		0182406-NLA	NLA - Pin, Push	1	1
21		1028486	Locknut, Low Profile (3/8-16)	1	1
22		0175600	Spacer, Coved (5/16 x 3/4 x 3/8")	1	2
23		0055206-NLA	NLA - Screw, Cap, Button Head, Socket (5/16-18 x 1-3/4")	1	1
24		1072692-NLA	NLA - Lockwasher, Split (5/16")	1	1
25		1025704	Washer, Flat (5/16 x 5/8 x 1/16")	1	1
26		0176422-NLA	NLA - Spacer, Coved (5/16 x 3/4 x 3/8")	1	2
28		0176200-NLA	NLA - Bushing, Nylon Guide	1	2
29		0177100-NLA	NLA - Bushing, Legrest Support	1	1
30		0178224-NLA	NLA - Bar, Insert, Black	1	1
31		0175800-NLA	NLA - Bushing, Guide	1	1
32		0224600-NLA	NLA - Screw, Socket Head, Cap (#10-32 x 3/4")	1	1
39	A,B	1109613	NLA - Kit, Calf Pad Mounting, Retro-Fit	1	1
27			NLA - Locknut, Low Profile (5/16-18)	1	1
33			NLA - Screw, Hex Head (5/16-18 x 3-1/2)	1	1
34			NLA - Clamp, Calf Pad	1	1

Genius Legrest

Tilt Only or Basic Recline 4XP or Tilt/Recline & Recline Only

NOTE: Mechanical elevation for Basic recline 4XP. Power elevation for Tilt Only and Tilt/Recline, Recline Only.

Due to a change to the Legrest Calf Pad size made on 4/23/12, you must also order the hardware kit (1109613) when ordering replacement Calf Pads.

Item Number	Note	Part Number	Description	Quantity Per Package	Quantity Per Assembly
35			NLA - Block, Legrest Pad Mount	1	1
36			Screw, Phillips Pan Head (#10-32 x 11/16")	1	2
36			Screw, Phillips Pan Head (#10-32 x 1")	1	2
37			Plate, Legrest Pad	1	1
38			NLA - Block, Mounting	1	1
			Instruction Sheet, Legrest Pad Mtg.	1	1
40	A,G	8881193555	Calf Pad Assembly, Black Base (Pair)	2	1
41		0238124-NLA	NLA - Tube, Legrest (18")	1	1
41		0232424-NLA	NLA - Tube, Legrest (20")	1	1
42		0177022-NLA	NLA - Clamp, Tube Half	1	2
43		0177602-NLA	NLA - Plate, Adjustment	1	2
44		1024793-NLA	NLA - Screw, Hex Head (1/4-20 x 1-3/4")	1	3
45		1096664-NLA	NLA - Plug Button, Black (1")	1	1
46		0177222-NLA	NLA - Pivot, Footplate	1	1
47		1027097	Plug Button, Black (3/4")	1	1
48		0194906-NLA	NLA - Screw, Phillips Pan Head Tap (#8-32 x 1/2")	1	1
49	C	0176022-NLA	NLA - Spacer	1	2
49	D	0186000-NLA	NLA - Spacer, Wheel	1	2
50	C	0179824-NLA	NLA - Tube, Footplate, Black	1	1
50	D	0288824-NLA	NLA - Tube, Footplate, Black	1	1
51	C	1036120-NLA	NLA - Spring	1	2
51	D,H	1036123	Spring, Leaf	1	2
52	C	1043659-NLA	NLA - Footplate, Aluminum, Deluxe, Black - Right (8" W x 5-3/4" L)	1	1
52	C	1043660-NLA	NLA - Footplate, Aluminum, Deluxe, Black - Left (8" W x 5-3/4" L)	1	1
52	D,E	44200X025	Footplate, Aluminum, Extra Large, Black - Right (8" W x 8-1/2" L)	1	1
52	D,E	44200X026	Footplate, Aluminum, Extra Large, Black - Left (8" W x 8-1/2" L)	1	1
	F	See Chart	Genius Legrest	1	1

NOTE:
A - Items 39 and 40 must be ordered together in pairs for Genius Legrest manufactured before 11/20/01.
B - Includes items 27 and 33 - 38 and Instruction Sheet.
C - Standard Footplate with Rubber Edge
D - X-Large Footplates
E - Black Wrinkle Coat
F - Not Shown
G - Due to a change to the Legrest Calf Pad size made on 4/23/12, you must also order the hardware kit (1109613) when ordering replacement Calf Pads.
H - Use one or more leaf springs per assembly as required such that footplate may be moved by hand to the up-right position and remain in place.

Genius Legrest

Tilt Only or Basic Recline 4XP or Tilt/Recline & Recline Only

NOTE: Mechanical elevation for Basic recline 4XP. Power elevation for Tilt Only and Tilt/Recline, Recline Only.

Due to a change to the Legrest Calf Pad size made on 4/23/12, you must also order the hardware kit (1109613) when ordering replacement Calf Pads.

Genius Legrest Assembly

Description	Standard Footplate	X-Large Footplate	Standard Footplate	X-Large Footplate
Legrest Tube	18" Long	18" Long	20" Long	20" Long
Width Range	16"-24"	16"-24"	16"-24"	16"-24"
Right Assembly	0196600-NLA	1072595-NLA	0264000-NLA	1072597-NLA
Left Assembly	0196500-NLA	1072594-NLA	0263900-NLA	1072596-NLA
Pair	0138100-NLA	1072904-NLA	0263800-NLA	1072905-NLA

Mechanical Legrest Actuator Linkage Without M.S.R.
Basic Recline (4XP)

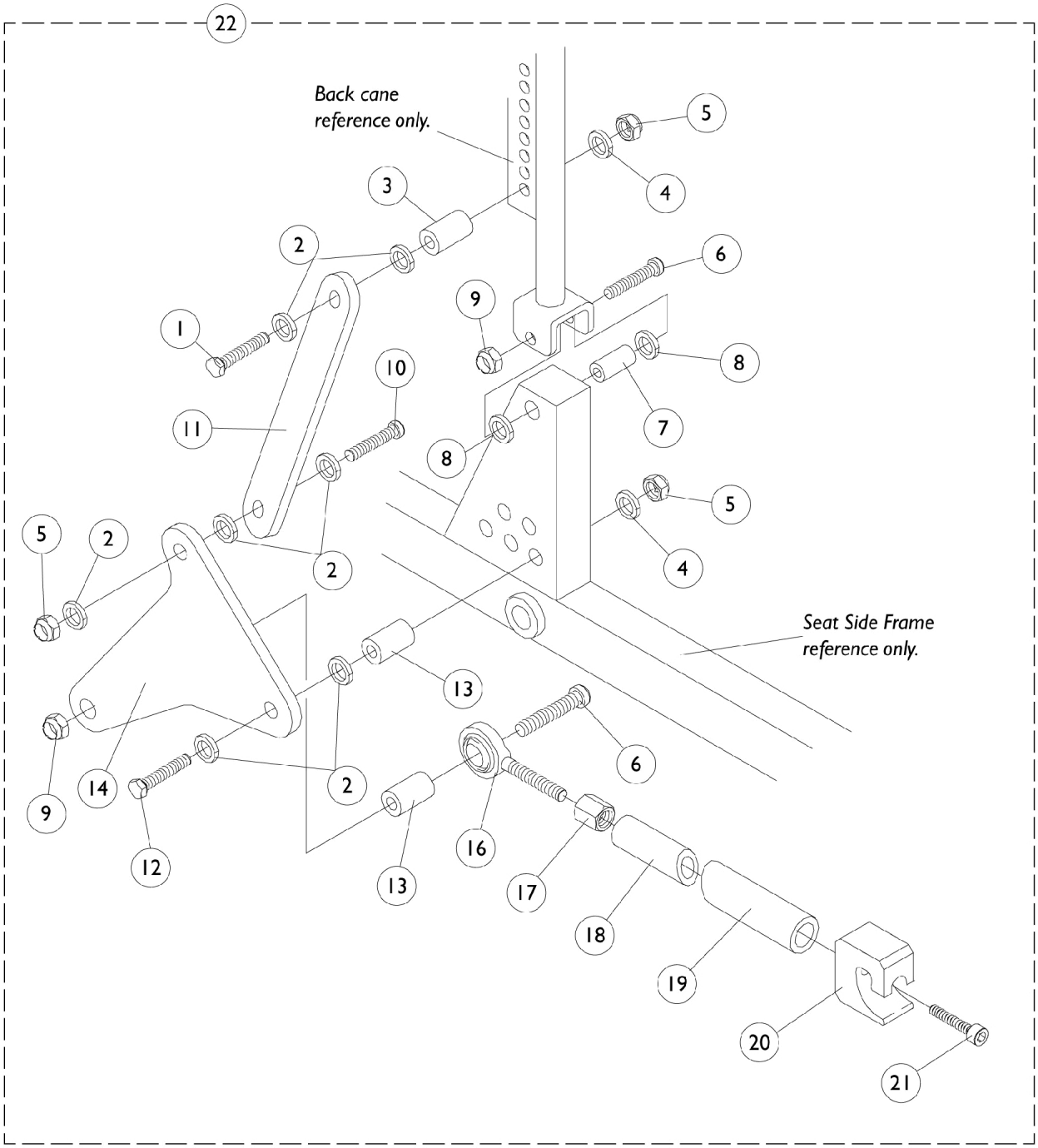

Mechanical Legrest Actuator Linkage Without M.S.R.

Basic Recline (4XP)

Item Number	Note	Part Number	Description	Quantity Per	
				Package	Assembly
1		1024793-NLA	NLA - Screw, Hex Head (1/4-20 x 1-3/4")	1	1
2		0050100-NLA	NLA - Washer, Nylon Flat (1/4 x 1/2 x 1/16")	1	7
3		0233222-NLA	NLA - Spacer, Plastic	1	1
4		0050406	Washer, Flat (1/4 x 5/8 x 1/16")	1	2
5		7930333	Locknut (1/4-20)	25	3
6		0055506-NLA	NLA - Screw, Button Head, Socket (5/16-18 x 2")	1	2
7		0060300-NLA	NLA - Bushing, Bronze (5/16 x 7/16 x 1-1/4")	1	1
8		0055800-NLA	NLA - Washer, Nylon (7/16 x 3/4 x 3/32")	1	2
9		0054906	Locknut, High Profile (5/16-18)	1	2
10		0051606-NLA	NLA - Screw, Cap, Button Head, Socket (1/4-20 x 1")	1	1
11		0217324-NLA	NLA - Link, Small, Black	1	1
12		0233506-NLA	NLA - Screw, Hex Head (1/4-20 x 2-1/2")	1	1
13		0217024-NLA	NLA - Bushing, Back Post/Leg Link	1	1
14		0217124-NLA	NLA - Link, Back Post Leg, Black	1	1
15		0220924-NLA	NLA - Spacer, Rod End	1	1
16		0083800-NLA	NLA - Rod, End, Male (5/16-24)	1	1
17		0141405-NLA	NLA - Nut, Hex (5/16-24)	1	1
18	B	0035902-NLA	NLA - Rod, Push, Rear Tube, Short, Black (12-1/2")	1	1
18	C	0222502-NLA	NLA - Rod, Push, Rear Tube, Long, Black (14")	1	1
19	D	0035702-NLA	NLA - Rod, Push, Front Tube, AT5544 Legrest, Black	1	1
19	E	0036402	NLA - Rod, Push, Front Tube, Genius Legrest, Black	1	1
20		0026400-NLA	NLA - Receptacle, Power Legrest	1	1
21		0053306-NLA	NLA - Screw, Allen Head (1/4-28 x 1")	1	1
22	A	1077510-NLA	NLA - Mechanical Legrest Hardware Assembly	1	2

NOTE:
A - Less items 18, 19
B - Short 12-1/2"
C - Long 14"
D - AT5544 Legrest
E - Genius Legrest

Mechanical Legrest Actuator Linkage w/ M.S.R.
Basic Recline 4XP

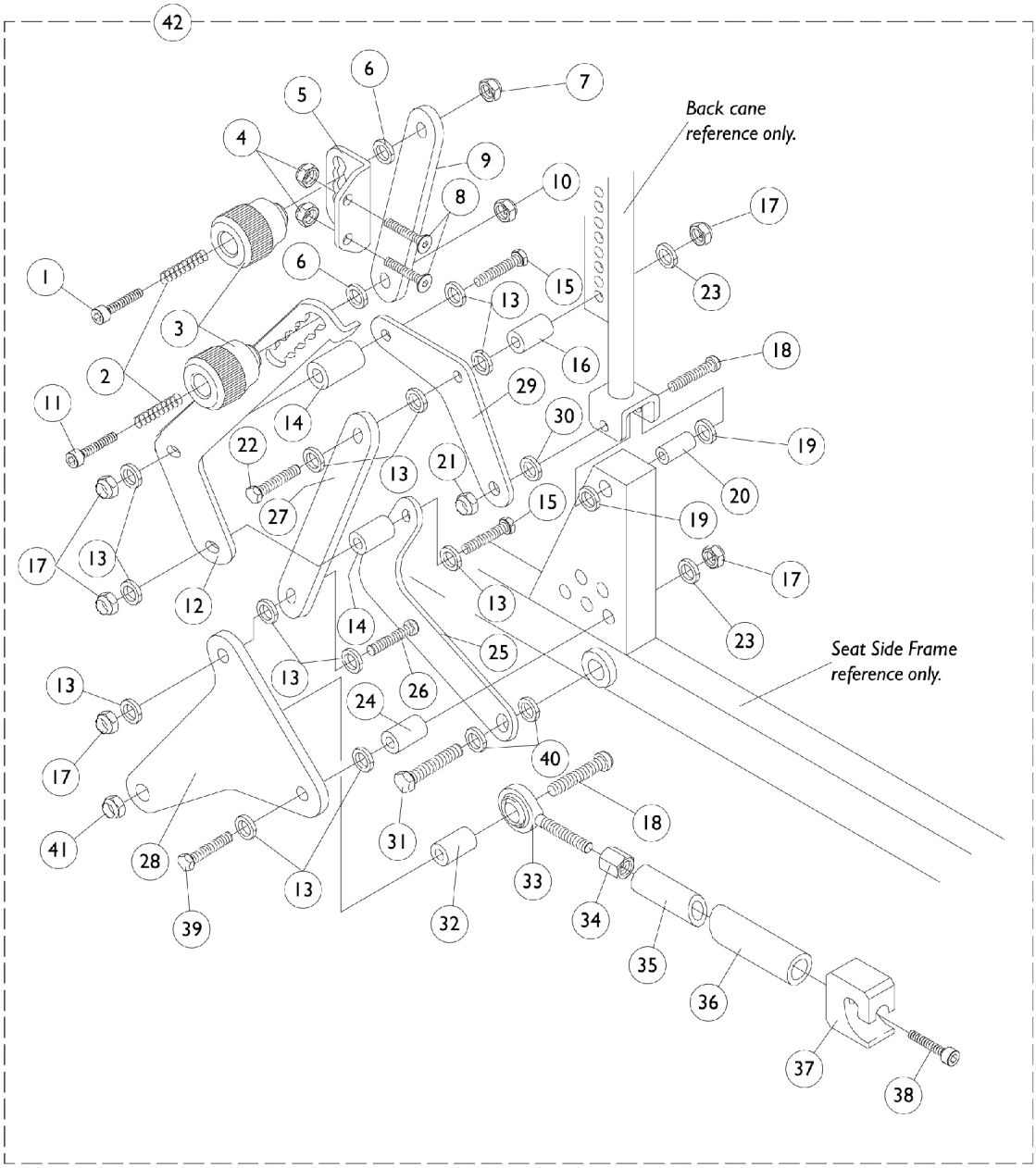

Mechanical Legrest Actuator Linkage w/ M.S.R.
Basic Recline 4XP

Item Number	Note	Part Number	Description	Quantity Per Package	Quantity Per Assembly
1		0258406-NLA	NLA - Screw, Socket Head, Cap (#10-32 x 1-1/4")	1	1
2		0146500-NLA	NLA - Spring, Compression (1/32 WT x 15/16" L)	1	2
3		0146622-NLA	NLA - Knob, MSR Adjustment	1	2
4		7930323-NLA	NLA - Package, Locknut (1/4-20)	25	2
5		0149624-NLA	NLA - Bracket, MSR Back Pan, Black	1	1
6		0146700-NLA	NLA - Washer, Nylon (3/16 x 5/8 x 1/16")	1	2
7		7930332-NLA	NLA - Locknut, High Profile (#10-32)	25	1
8		0195606-NLA	NLA - Screw, Socket, Cap, Flat Head (1/4-20 x 3/4")	1	2
9		0148806-NLA	NLA - Link, Upper Adjustment, Black	1	1
10		317601-NLA	NLA - Locknut, Low Profile (#10-32)	1	1
11		0149506-NLA	NLA - Screw, Socket Head, Hex (#10-32 x 1")	1	1
12		0175524-NLA	NLA - Link, Lower Adjustment, Black - Right	1	1
12		0175424-NLA	NLA - Link, Lower Adjustment, Black - Left	1	1
13		0050100-NLA	NLA - Washer, Nylon Flat (1/4 x 1/2 x 1/16")	1	12
14		0216901-NLA	NLA - Bushing, Upper/ Lower	1	2
15		0052606-NLA	NLA - Screw, Hex Head (1/4-20 x 2")	1	2
16		0146422-NLA	NLA - Spacer, Leg Link	1	1
17		7930333	Locknut (1/4-20)	25	5
18		0055506-NLA	NLA - Screw, Button Head, Socket (5/16-18 x 2")	1	2
19		0055800-NLA	NLA - Washer, Nylon (7/16 x 3/4 x 3/32")	1	2
20		0060300-NLA	NLA - Bushing, Bronze (5/16 x 7/16 x 1-1/4")	1	1
21		0055006-NLA	NLA - Locknut, Low Profile (5/16-18)	1	1
22		1024793-NLA	NLA - Screw, Hex Head (1/4-20 x 1-3/4")	1	1
23		0050406	Washer, Flat (1/4 x 5/8 x 1/16")	1	2
24		0217024-NLA	NLA - Bushing, Back Post/Leg Link	1	1
25		0165424-NLA	NLA - Link, MSR Lower, Black	1	1
26		0051606-NLA	NLA - Screw, Cap, Button Head, Socket (1/4-20 x 1")	1	1
27		0217324-NLA	NLA - Link, Small, Black	1	1
28		0217124-NLA	NLA - Link, Back Post Leg, Black	1	1
29		0217224-NLA	NLA - Link, MSR Back Post Lower, Black	1	1
30		0054806-NLA	NLA - Washer, Flat (11/32 x 11/16 x 1/16")	1	1
31		0139606-NLA	NLA - Screw, Hex Head (5/16-18 x 1")	1	1
32		0220924-NLA	NLA - Spacer, Rod End	1	1
33		0083800-NLA	NLA - Rod, End, Male (5/16-24)	1	1
34		0141405-NLA	NLA - Nut, Hex (5/16-24)	1	1
35	B	0035902-NLA	NLA - Rod, Push, Rear Tube, Short, Black (12-1/2")	1	1
35	C	0222502-NLA	NLA - Rod, Push, Rear Tube, Long, Black (14")	1	1
36	D	0035702-NLA	NLA - Rod, Push, Front Tube, AT5544 Legrest, Black	1	1
36	E	0036402	NLA - Rod, Push, Front Tube, Genius Legrest, Black	1	1
37		0026400-NLA	NLA - Receptacle, Power Legrest	1	1
38		0053306-NLA	NLA - Screw, Allen Head (1/4-28 x 1")	1	1

Mechanical Legrest Actuator Linkage w/ M.S.R.

Basic Recline 4XP

Item Number	Note	Part Number	Description	Quantity Per	
				Package	Assembly
39		0233506-NLA	NLA - Screw, Hex Head (1/4-20 x 2-1/2")	1	1
40		0054700-NLA	NLA - Washer, Nylon (5/16 x 1/2 x 1/16")	1	2
41		0054906	Locknut, High Profile (5/16-18)	1	1
42	A	1077514-NLA	NLA - Mechanical Legrest Actuator Linkage Assembly w/ M.S.R. - Right	1	1
42	A	1077515-NLA	NLA - Mechanical Legrest Actuator Linkage Assembly w/ M.S.R. - Left	1	1

NOTE:
A - Less items 35, 36
B - Short 12-1/2"
C - Long 14"
D - AT5544 Legrest
E - Genius Legrest

Motor Actuators

Genius and AT5544 Legrest
Tilt Only or Tilt/Recline & Recline Only

NOTE: See AT5544 Legrest (Power) page for mounting hardware.

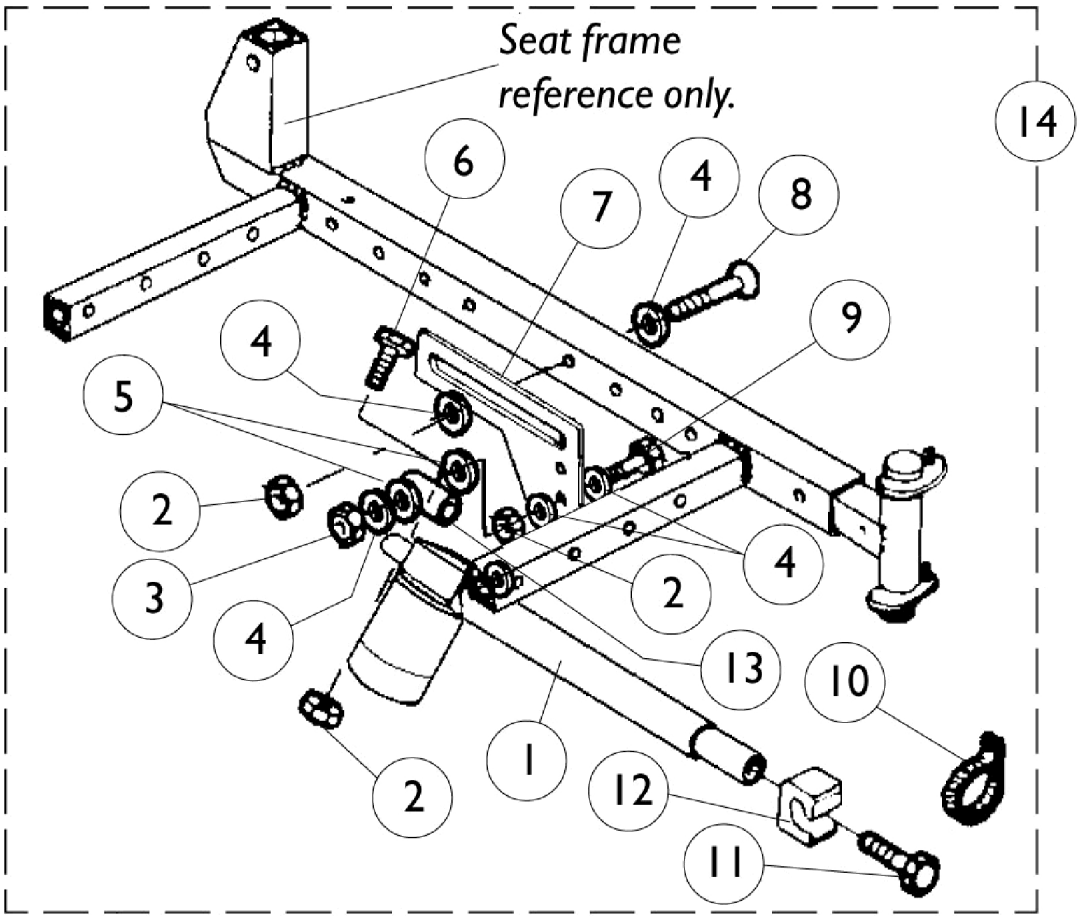

Motor Actuators
Genius and AT5544 Legrest
Tilt Only or Tilt/Recline & Recline Only

Item Number	Note	Part Number	Description	Quantity Per Package	Quantity Per Assembly
1	B	0204100-NLA	NLA - Actuator Motor, Legrest - Right (4" Stroke)	1	1
1	B	0204000-NLA	NLA - Actuator Motor, Legrest - Left (4" Stroke)	1	1
1	C	0001000-NLA	Actuator Motor, Legrest - Right (5" Stroke)	1	1
1	C	0000900-NLA	Actuator Motor, Legrest - Left (5" Stroke)	1	1
2		7930323-NLA	NLA - Package, Locknut (1/4-20)	25	4
3		7930333	Locknut (1/4-20)	25	1
4		0050406	Washer, Flat (1/4 x 5/8 x 1/16")	1	7
5		0050100-NLA	NLA - Washer, Nylon Flat (1/4 x 1/2 x 1/16")	1	2
6		0051706-NLA	NLA - Screw, Hex Head (1/4-20 x 1")	1	1
7		0116602-NLA	NLA - Plate, Legrest Actuator Mounting	1	1
8		1024793-NLA	NLA - Screw, Hex Head (1/4-20 x 1-3/4")	1	2
9		0224306-NLA	NLA - Screw, Hex Head (1/4-20 x 1-34")	1	1
10		0157600-NLA	NLA - Strap, Support, Actuator	1	1
11		0053306-NLA	NLA - Screw, Allen Head (1/4-28 x 1")	1	1
12		0026400-NLA	NLA - Receptacle, Power Legrest	1	1
13	D	0203802-NLA	NLA - Bushing, Extension	1	1
13	E	0116502-NLA	NLA - Bushing, Anti-Rotation	1	1
14	A,B	1072855-NLA	NLA - Kit, Actuator Motor w/ Hardware, Legrest - Right (4" Stroke)	1	1
14	A,B	1072856-NLA	NLA - Kit, Actuator Motor w/ Hardware, Legrest - Left (4" Stroke)	1	1
14	B,D	1072857-NLA	NLA - Kit, Actuator Motor w/ Hardware, Legrest - Right (4" Stroke)	1	1
14	B,D	1072858-NLA	NLA - Kit, Actuator Motor w/ Hardware, Legrest - Left (4" Stroke)	1	1
14	A,C	1072859-NLA	NLA - Kit, Actuator Motor w/ Hardware, Legrest - Right (5" Stroke)	1	1
14	A,C	1072860	Kit, Actuator Motor w/ Hardware, Legrest - Left (5" Stroke)	1	1
14	C,E	1072861	Kit, Actuator Motor w/ Hardware, Legrest - Right (5" Stroke)	1	1
14	C,E	1072862	Kit, Actuator Motor w/ Hardware, Legrest - Left (5" Stroke)	1	1

NOTE:
A - Item 13 is not used with this legrest actuator attaching hardware.
B - Genius
C - Invacare, AT5544
D - 20" Seat Depth Only
E - 16"-17" Seat Depth Only

Arm Pads
Otto Bock

Channel Forearm Pads include all hardware and Instructions for attaching to a wheelchair or Elevating Swivel Unit. Hardware to attach a Hand Pad to the Channel Forearm Pad comes with the Channel Forearm Pad only. The Channel Forearm Pad hardware is not sold separately.

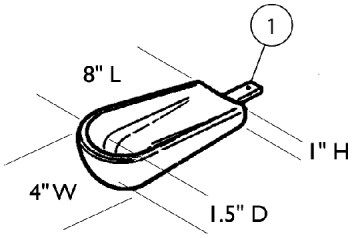

Small Channel Forearm Pad
0020700 ea.

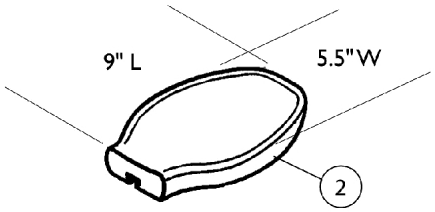

Flat Hand Pad (Large)
0023000 ea.

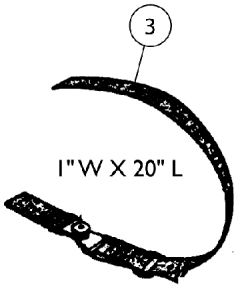

Hand/Forearm Pad Strap Kit
0021700 ea.

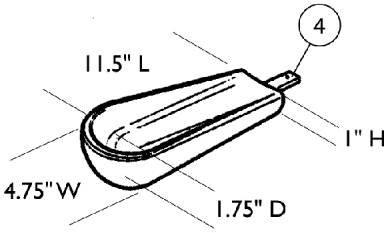

Medium Channel Forearm Pad
0020600 ea.

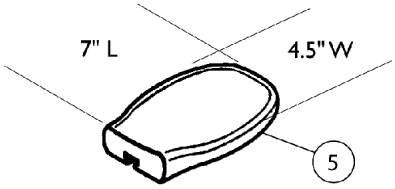

Flat Hand Pad (Medium)
0023300 ea.

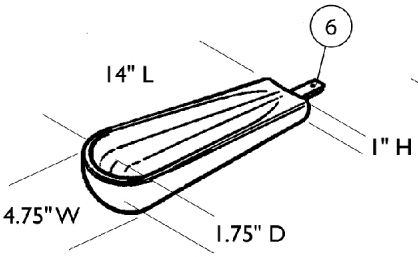

Large Channel Forearm Pad
0020500 ea.

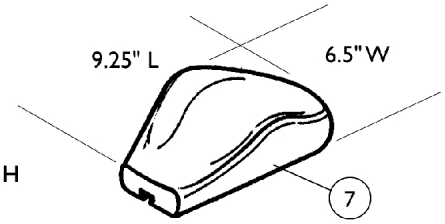

Palm Extensor Hand Pad
Right 0021600
Left 0021500

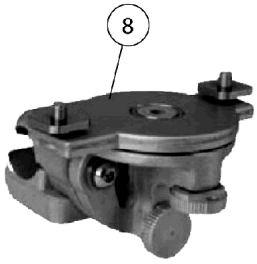

Elevating Swivel Unit 7/8"
Right or Left 1166835

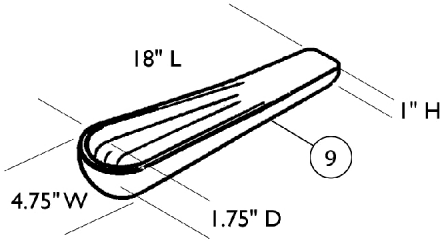

One Piece Channel Forearm Pad
0020400 ea.

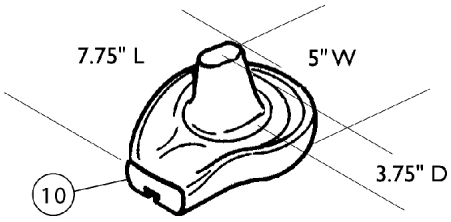

Cone Hand Pad
Right 0164900
Left 0164800

Arm Pads
Otto Bock

Channel Forearm Pads include all hardware and Instructions for attaching to a wheelchair or Elevating Swivel Unit. Hardware to attach a Hand Pad to the Channel Forearm Pad comes with the Channel Forearm Pad only. The Channel Forearm Pad hardware is not sold separately.

Item Number	Note	Part Number	Description	Quantity Per	
				Package	Assembly
1		0020700-NLA	NLA - Pad, Small Channel Forearm	1	1
2		0023000-NLA	NLA - Pad, Flat Hand - Large	1	1
3		0021700-NLA	NLA - Kit, Hand/ Forearm Pad Strap	1	1
4		0020600-NLA	NLA - Pad, Medium Channel Forearm	1	1
5		0023300-NLA	NLA - Pad, Flat Hand - Medium	1	1
6		0020500-NLA	NLA - Pad, Large Channel Forearm	1	1
7		0021600-NLA	NLA - Pad, Palm Extensor Hand - Right	1	1
7		0021500-NLA	NLA - Pad, Palm Extensor Hand - Left	1	1
8	A	1166835-NLA	NLA - Unit, Elevating Swivel - Right/Left (7/8")	1	1
9		0020400-NLA	NLA - Pad, One Piece Channel Forearm	1	1
10		0164900-NLA	NLA - Pad, Cone Hand - Right	1	1
10		0164800-NLA	NLA - Pad, Cone Hand - Left	1	1

NOTE: A - 0021400 Unit, Elevating Swivel - Right (7/8") and 0021300 Unit, Elevating Swivel - Left (7/8") are replaced with part number 1166835. The new Unit can be used on the right or left side of the wheelchair.

Headrest Support Assembly
A.B.S. Curved Back

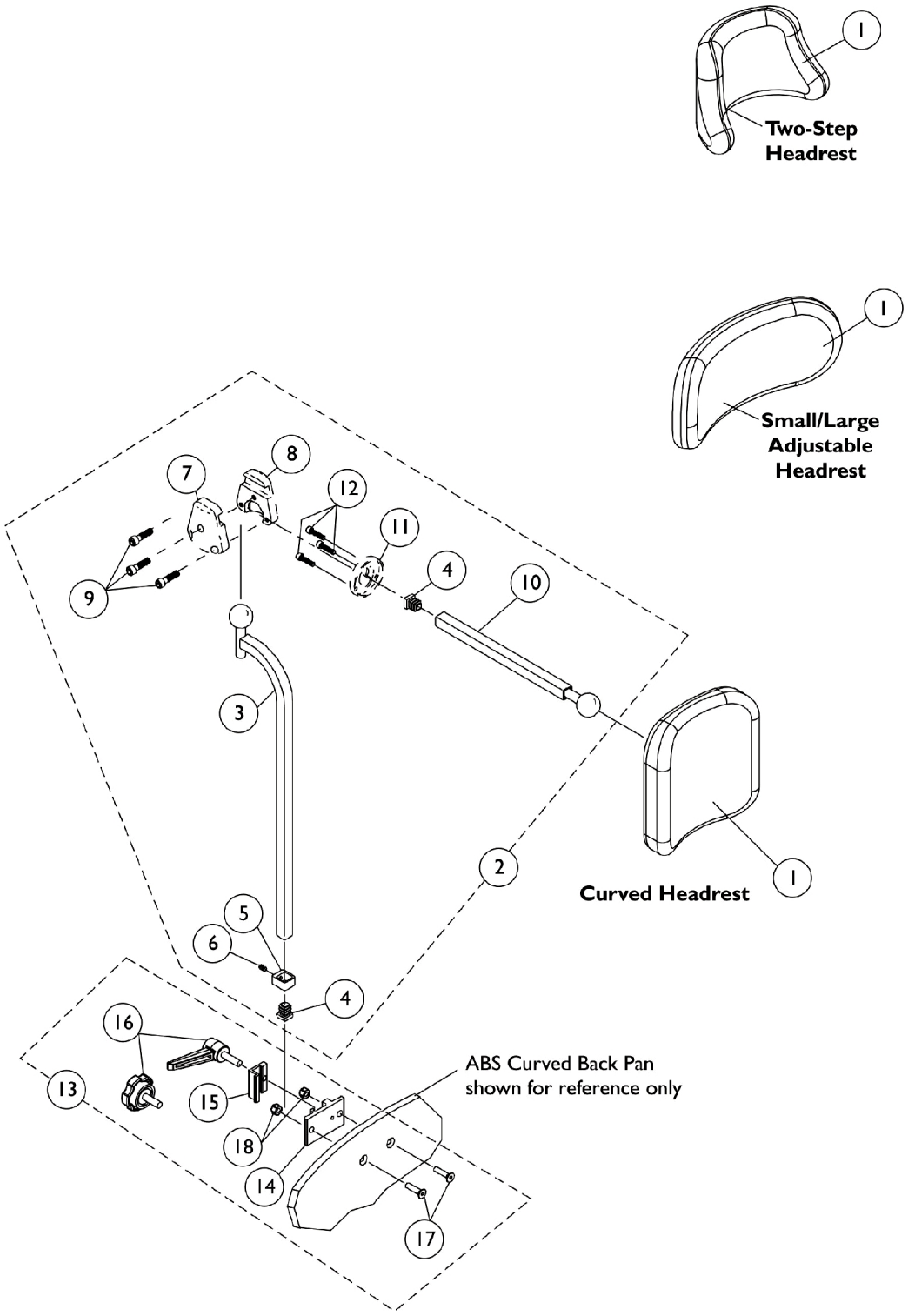

Headrest Support Assembly
A.B.S. Curved Back

Item Number	Note	Part Number	Description	Quantity Per Package	Quantity Per Assembly
1		0127700	Headrest, Curved (6" W x 7" H)	1	1
1		0128000-NLA	NLA - Headrest, Two-Step (8-1/2" W x 5-1/2" H)	1	1
1		0022600	Kit, Headrest w/ Screws, Adjustable, Small, Otto Bock (9" W x 3-1/2" H)	1	1
1		0022400	Kit, Headrest w/ Screws, Adjustable, Large, Otto Bock (12" W x 6" H)	1	1
2		0197024	Fixture Assembly, Offset Support	1	1
3		0271524-NLA	NLA - Tube, Offset Fixture, Black	1	1
4		1077076-NLA	NLA - Plug Button, Square (1/2")	1	2
5		0271124-NLA	NLA - Collar, Offset Fixture Tube	1	1
6		0288606-NLA	NLA - Screw, Set Socket Cup Point (#10-24 x 3/16")	1	1
7		0271224	Half Clamp, Non-Threaded Holes	1	1
8		0271324	Half Clamp, Threaded Holes	1	1
9		1027268	Screw, Allen Head (1/4-20 x 1")	1	3
10		0271424-NLA	NLA - Tube, Fixture Adjustment	1	1
11		0283724-NLA	NLA - Ring, Fixture Clamp	1	1
12		0067006-NLA	NLA - Screw, Cap, Socket Head (#10-32 x 1/2")	1	3
13	B,C	0273100	Kit, Headrest Clamp, Lever Style	1	1
14	A	0237422-NLA	NLA - Clamp, Small Bottom Half	1	1
15	A	0237522-NLA	NLA - Clamp, Small Top Half	1	1
16		1072439-NLA	NLA - Knob, Adjustment, Black (3/4" L Threads)	1	1
17		0288706-NLA	NLA - Screw, Socket, Flat Head (1/4-20 x 1")	1	2
18		7930333	Locknut (1/4-20)	25	2

NOTE: A - Clamp is no longer available individually. See item 13 Clamp Assembly part number 0273100
B - Includes items 14-18. Item 16 Adjustment Knob was replaced with an Adjustment Lever. The Lever is not available as a separate part. The knob Part # 1072439 is still sold separately and is interchangeable with the Lever.
C - Hardware can also be used with an Invacare Personal Back.

Headrest Assembly
Profile and Recessed Back
Basic Tilt and Tilt Only or Tilt/Recline and Recline Only

NOTE: Recessed back is not offered on Basic Tilt and Tilt Only Systems.
NOTE: Headrest clamp hardware comes packaged to accommodate profile and recessed backs.

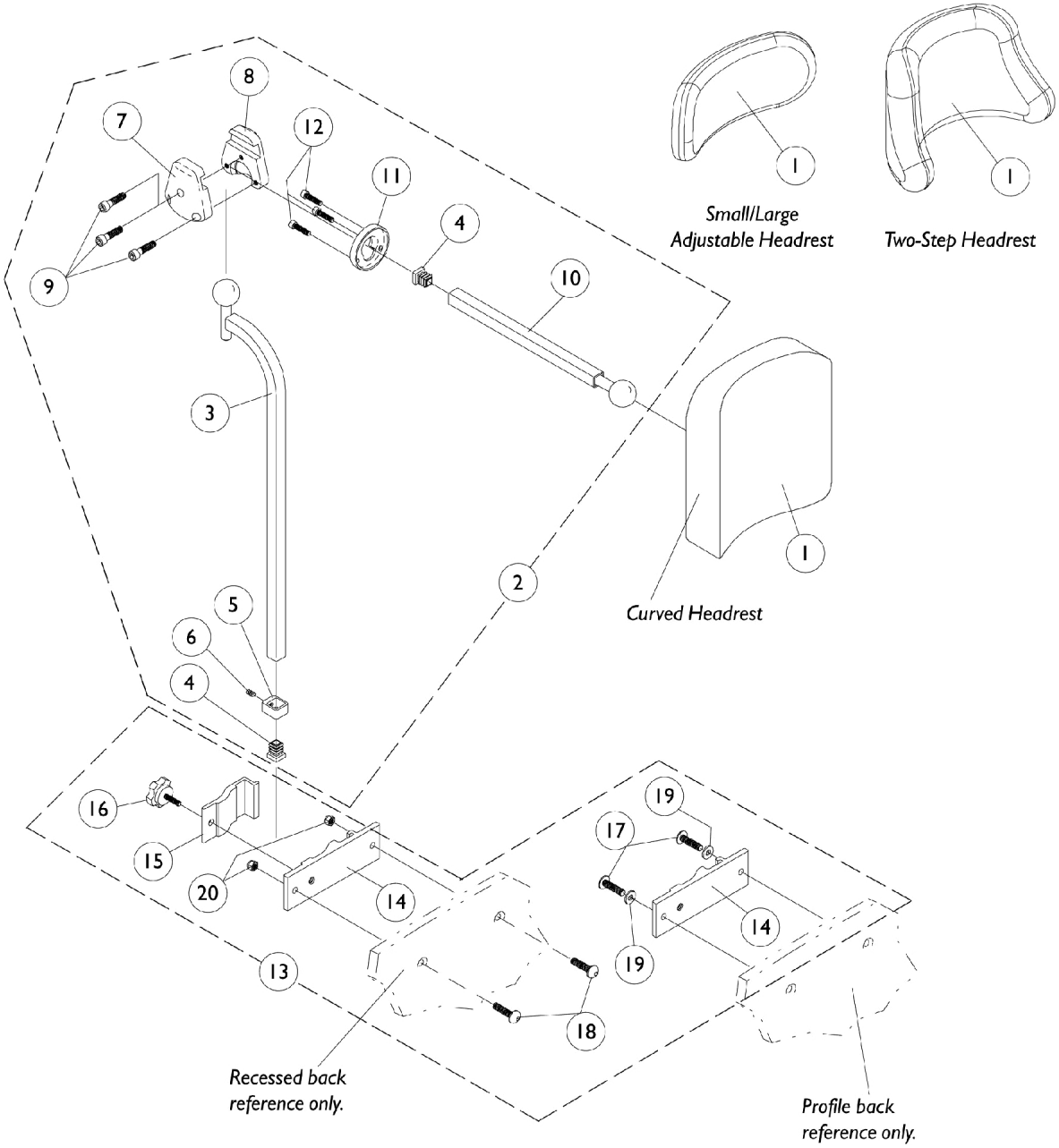

Headrest Assembly
Profile and Recessed Back
Basic Tilt and Tilt Only or Tilt/Recline and Recline Only

Item Number	Note	Part Number	Description	Quantity Per	
				Package	Assembly
1		0127700	Headrest, Curved (6" W x 7" H)	1	1
1		0128000-NLA	NLA - Headrest, Two-Step (8-1/2" W x 5-1/2" H)	1	1
1		0022600	Kit, Headrest w/ Screws, Adjustable, Small, Otto Bock (9" W x 3-1/2" H)	1	1
1		0022400	Kit, Headrest w/ Screws, Adjustable, Large, Otto Bock (12" W x 6" H)	1	1
2		0197024	Fixture Assembly, Offset Support	1	1
3		0271524-NLA	NLA - Tube, Offset Fixture, Black	1	1
4		1077076-NLA	NLA - Plug Button, Square (1/2")	1	2
5		0271124-NLA	NLA - Collar, Offset Fixture Tube	1	1
6		0288606-NLA	NLA - Screw, Set Socket Cup Point (#10-24 x 3/16")	1	1
7		0271224	Half Clamp, Non-Threaded Holes	1	1
8		0271324	Half Clamp, Threaded Holes	1	1
9		1027268	Screw, Allen Head (1/4-20 x 1")	1	3
10		0271424-NLA	NLA - Tube, Fixture Adjustment	1	1
11		0283724-NLA	NLA - Ring, Fixture Clamp	1	1
12		0067006-NLA	NLA - Screw, Cap, Socket Head (#10-32 x 1/2")	1	3
13	A	0273000-NLA	NLA - Headrest Clamp Assembly	1	1
14	A	0235222-NLA	NLA - Clamp, Large Bottom Half	1	1
15	A	0235322-NLA	NLA - Clamp, Large Top Half	1	1
16		1072440	Knob, Adjustment, Black (1/2" L Threads)	1	1
17		0258006-NLA	NLA - Screw, Socket Head, Cap, Button (1/4-20 x 5/8")	1	2
18		0051606-NLA	NLA - Screw, Cap, Button Head, Socket (1/4-20 x 1")	1	2
19		1007453	Lockwasher, Split (1/4")	1	2
20		7930323-NLA	NLA - Package, Locknut (1/4-20)	25	2

NOTE: A - Recessed and Profile Backs

Headrest Support Assembly
Back Cane Only Option

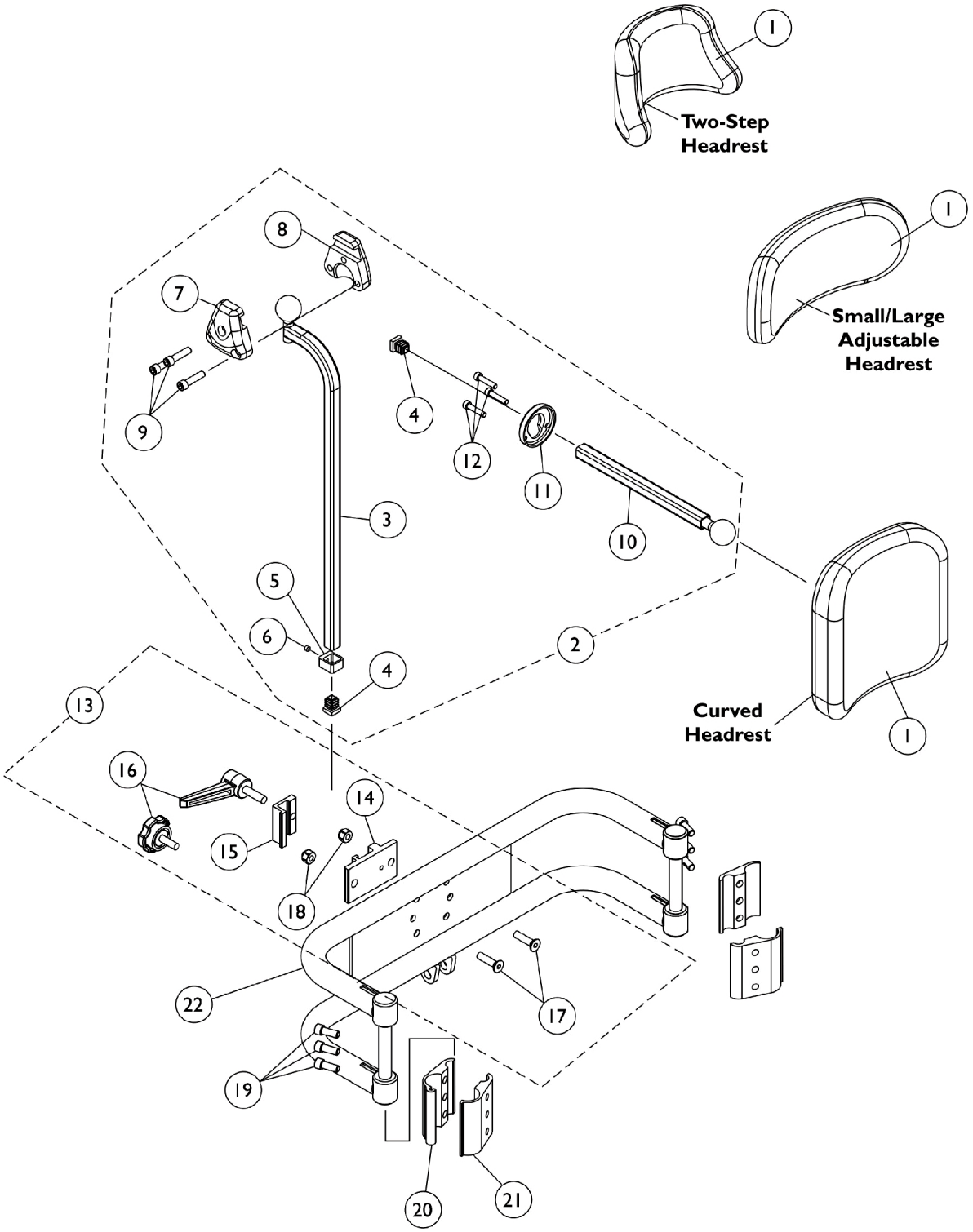

Headrest Support Assembly
Back Cane Only Option

Item Number	Note	Part Number	Description	Quantity Per Package	Quantity Per Assembly
1		0127700	Headrest, Curved (6" W x 7" H)	1	1
1		0128000-NLA	NLA - Headrest, Two-Step (8-1/2" W x 5-1/2" H)	1	1
1		0022600	Kit, Headrest w/ Screws, Adjustable, Small, Otto Bock (9" W x 3-1/2" H)	1	1
1		0022400	Kit, Headrest w/ Screws, Adjustable, Large, Otto Bock (12" W x 6" H)	1	1
2		0197024	Fixture Assembly, Offset Support	1	1
3		0271524-NLA	NLA - Tube, Offset Fixture, Black	1	1
4		1077076-NLA	NLA - Plug Button, Square (1/2")	1	2
5		0271124-NLA	NLA - Collar, Offset Fixture Tube	1	1
6		0288606-NLA	NLA - Screw, Set Socket Cup Point (#10-24 x 3/16")	1	1
7		0271224	Half Clamp, Non-Threaded Holes	1	1
8		0271324	Half Clamp, Threaded Holes	1	1
9		1027268	Screw, Allen Head (1/4-20 x 1")	1	3
10		0271424-NLA	NLA - Tube, Fixture Adjustment	1	1
11		0283724-NLA	NLA - Ring, Fixture Clamp	1	1
12		0067006-NLA	NLA - Screw, Cap, Socket Head (#10-32 x 1/2")	1	3
13	B,C	0273100	Kit, Headrest Clamp, Lever Style	1	1
14	A	0237422-NLA	NLA - Clamp, Small Bottom Half	1	1
15	A	0237522-NLA	NLA - Clamp, Small Top Half	1	1
16		1072439-NLA	NLA - Knob, Adjustment, Black (3/4" L Threads)	1	1
17		0052906-NLA	NLA - Screw, Socket Button Head (1/4-20 x 3/4")	1	2
18		7930333	Locknut (1/4-20)	25	2
19		0068706-NLA	NLA - Screw, Cap, Socket Head (1/4-20 x 5/8")	1	6
20		0190722	Half Clamp, Un-Threaded Holes (7/8" Dia. Back Canes)	1	2
21		0190822	Half Clamp, Threaded Holes (7/8" Dia. Back Canes)	1	2
22		0013402	Bar, Push, Black (14" W)	1	1
22		0013502	Bar, Push, Black (15" W)	1	1
22		0013602	Bar, Push, Black (16" W)	1	1
22		0013702	Bar, Push, Black (17" W)	1	1
22		0013802	Bar, Push, Black (18" W)	1	1
22		0013902	Bar, Push, Black (19" W)	1	1
22		0014002	Bar, Push, Black (20" W)	1	1
22		0014102	Bar, Push, Black (21" W)	1	1
22		0014202	Bar, Push, Black (22" W)	1	1

NOTE: A - Clamp is no longer available individually. See item 13 Clamp Assembly part number 0273100
B - Includes items 14-18. Item 16 Adjustment Knob was replaced with an Adjustment Lever. The Lever is not available as a separate part. The knob Part # 1072439 is still sold separately and is interchangeable with the Lever.
C - Hardware can also be used with an Invacare Personal Back.

Lateral Support Assembly
Otto Bock
Basic Tilt and Tilt Only

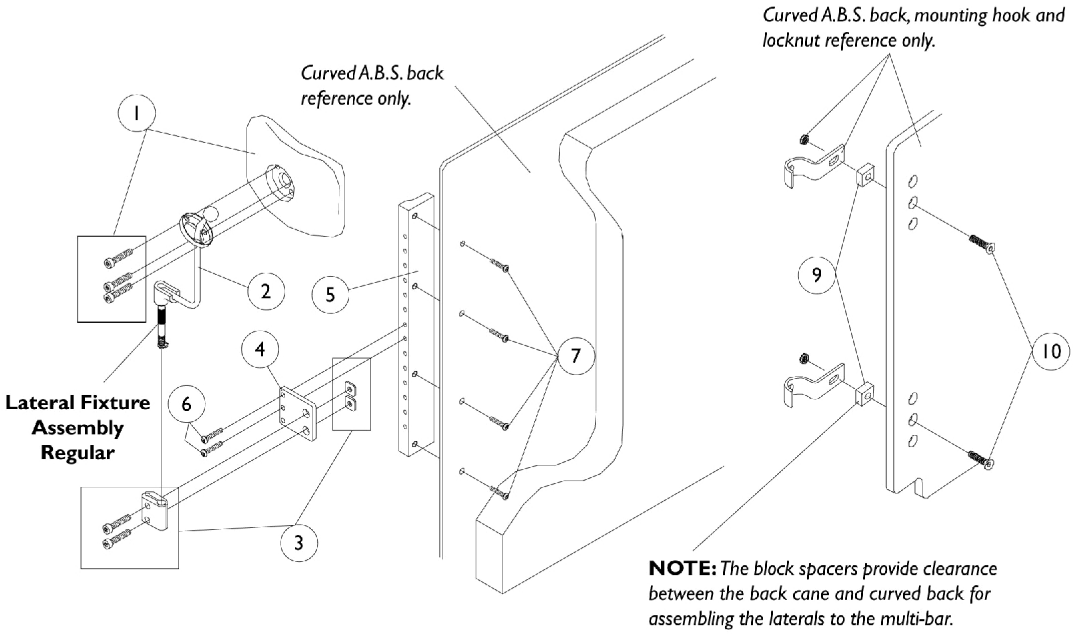

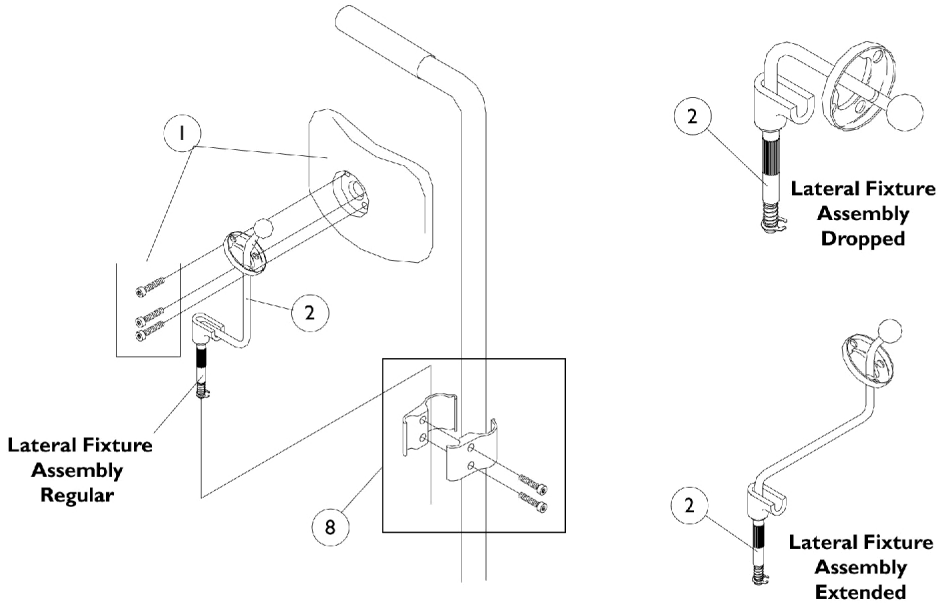

Lateral Support Assembly
Otto Bock
Basic Tilt and Tilt Only

Item Number	Note	Part Number	Description	Quantity Per	
				Package	Assembly
1		0023700-NLA	NLA - Pad Assembly, O.B. Lateral - Small (4-1/2" W x 3" H)	1	1
1		0024800-NLA	NLA - Pad Assembly, O.B. Lateral - Medium (5-1/4" W x 3-1/2" H)	1	1
1		0024700-NLA	NLA - Pad Assembly, O.B. Lateral - Large (7" W x 4-1/2" H)	1	1
2		0024200-NLA	NLA - Fixture Assembly, O.B. Lateral, Regular, Right	1	1
2		0024100	Fixture Assembly, O.B. Lateral, Regular, Left	1	1
2		0024400-NLA	NLA - Fixture Assembly, O.B. Lateral, Extended, Right	1	1
2		0024300-NLA	NLA - Fixture Assembly, O.B. Lateral, Extended, Left	1	1
2		0024600-NLA	NLA - Fixture Assembly, O.B. Lateral, Dropped, Right	1	1
2		0024500-NLA	NLA - Fixture Assembly, O.B. Lateral, Dropped - Left	1	1
3		0024000-NLA	NLA - Clamp Assembly, Flat	1	1
4		0260702-NLA	NLA - Plate, Adapter (5/8" Spacing)	1	1
4		0063602-NLA	NLA - Adapter, Plate (3/4" Spacing)	1	1
5		0260522-NLA	NLA - Bar, Multi-Attachment, A.B.S. Curved Back, 5/8" Spacing	1	1
5		0063522-NLA	NLA - Bar, Multi-Attachment, A.B.S. Curved Back, 3/4" Spacing	1	1
6		0139306-NLA	NLA - Screw, Socket Button Head (#10-32 x 3/4")	1	2
7		0052906-NLA	NLA - Screw, Socket Button Head (1/4-20 x 3/4")	1	4
8		0023800-NLA	NLA - Clamp Assembly, 3/4" Diameter Cane	1	1
8		0023900-NLA	NLA - Clamp Assembly, 7/8" Diameter Cane	1	1
9		0159402	Spacer, Block (1 x 3/4 x 1/2")	1	4
10		0050806-NLA	NLA - Screw, Socket Flat Head (1/4-20 x 1-1/2)	1	4

Lateral Support Assembly
Otto Bock
Basic Recline (4XP) or Tilt/Recline and Recline Only

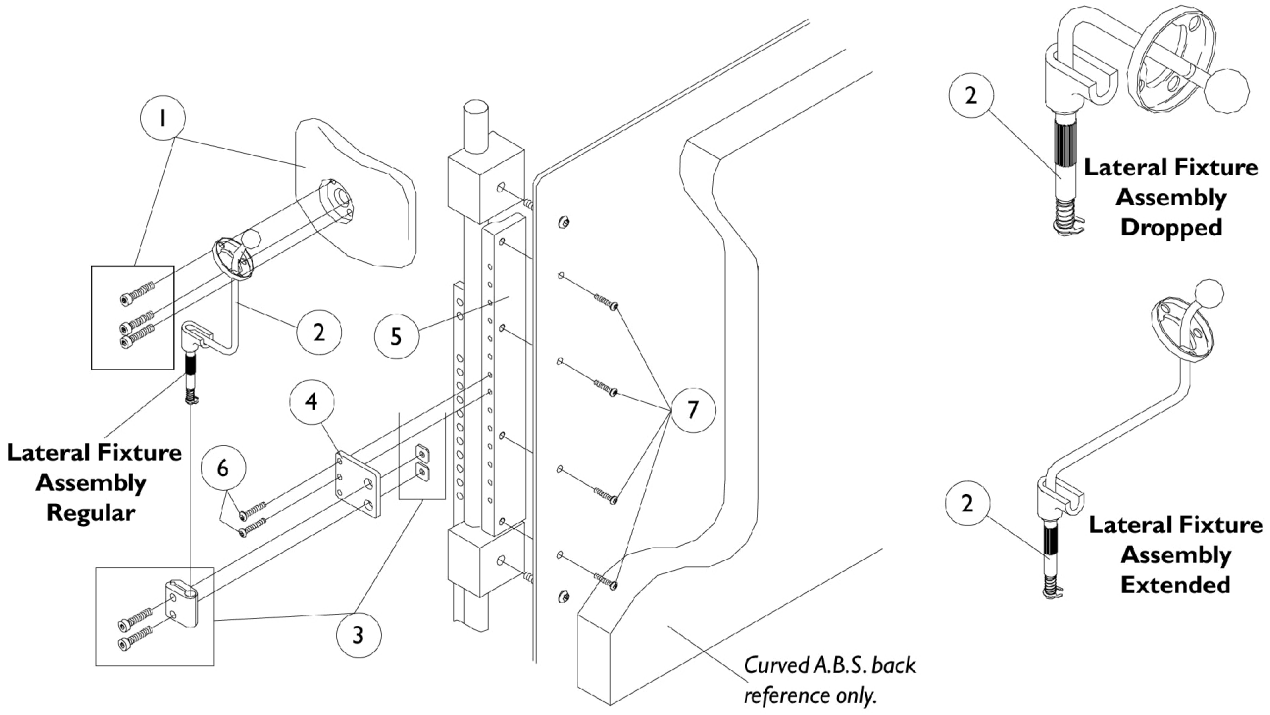

Lateral Support Assembly
Otto Bock
Basic Recline (4XP) or Tilt/Recline and Recline Only

Item Number	Note	Part Number	Description	Quantity Per	
				Package	Assembly
1		0023700-NLA	NLA - Pad Assembly, O.B. Lateral - Small (4-1/2" W x 3" H)	1	1
1		0024800-NLA	NLA - Pad Assembly, O.B. Lateral - Medium (5-1/4" W x 3-1/2" H)	1	1
1		0024700-NLA	NLA - Pad Assembly, O.B. Lateral - Large (7" W x 4-1/2" H)	1	1
2		0024200-NLA	NLA - Fixture Assembly, O.B. Lateral, Regular, Right	1	1
2		0024100	Fixture Assembly, O.B. Lateral, Regular, Left	1	1
2		0024400-NLA	NLA - Fixture Assembly, O.B. Lateral, Extended, Right	1	1
2		0024300-NLA	NLA - Fixture Assembly, O.B. Lateral, Extended, Left	1	1
2		0024600-NLA	NLA - Fixture Assembly, O.B. Lateral, Dropped, Right	1	1
2		0024500-NLA	NLA - Fixture Assembly, O.B. Lateral, Dropped - Left	1	1
3		0024000-NLA	NLA - Clamp Assembly, Flat	1	1
4		0260702-NLA	NLA - Plate, Adapter (5/8" Spacing)	1	1
4		0063602-NLA	NLA - Adapter, Plate (3/4" Spacing)	1	1
5		0260522-NLA	NLA - Bar, Multi-Attachment, A.B.S. Curved Back, 5/8" Spacing	1	1
5		0063522-NLA	NLA - Bar, Multi-Attachment, A.B.S. Curved Back, 3/4" Spacing	1	1
6		0139306-NLA	NLA - Screw, Socket Button Head (#10-32 x 3/4")	1	2
7		0052906-NLA	NLA - Screw, Socket Button Head (1/4-20 x 3/4")	1	4

Lateral Support Assembly
Tarsys
Basic Tilt and Tilt Only

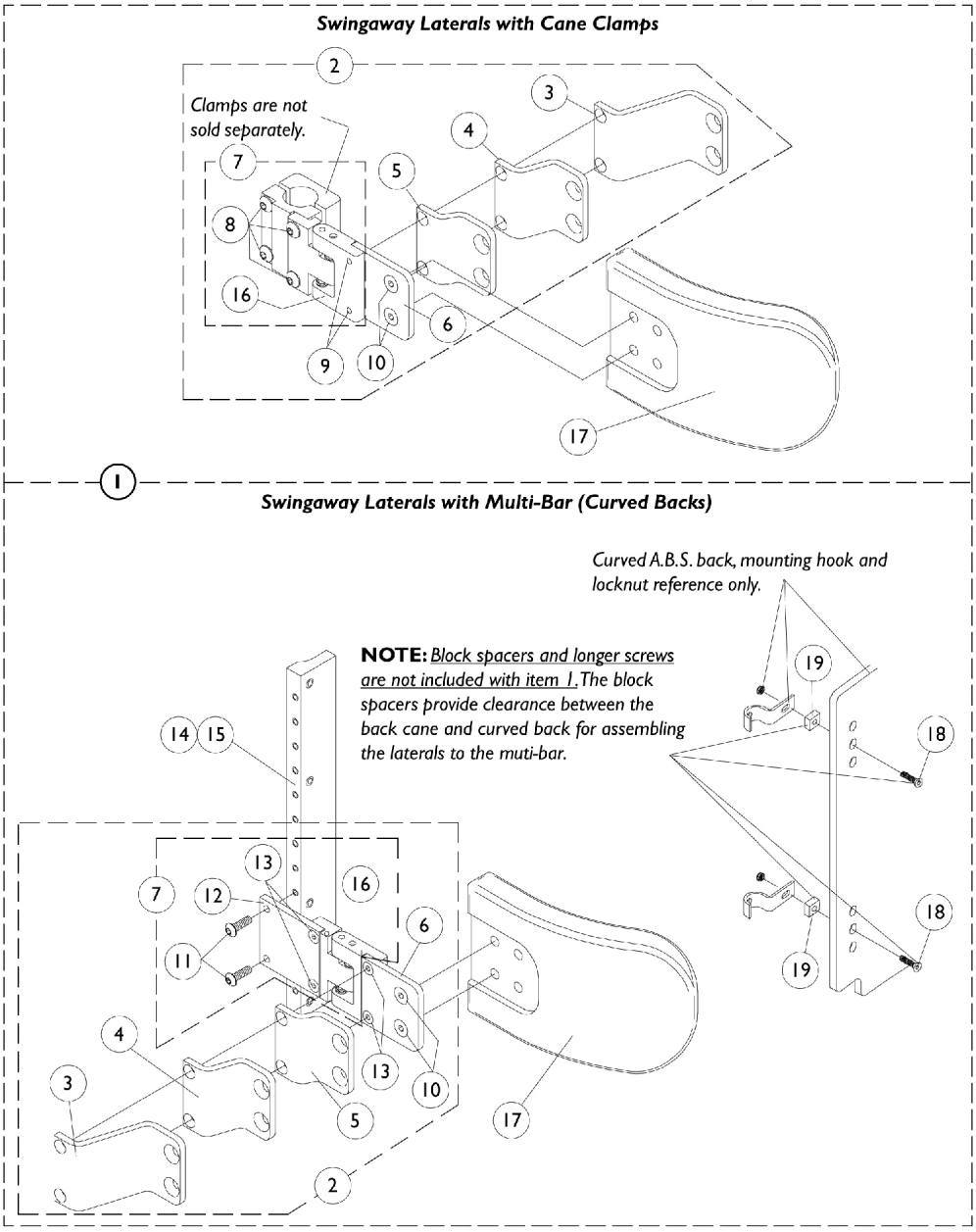

Lateral Support Assembly
Tarsys
Basic Tilt and Tilt Only

Item Number	Note	Part Number	Description	Quantity Per Package	Quantity Per Assembly
1		1072661	Swingaway Lateral Support Assembly (Tarsys) (Pair) Cane Clamp Hardware with Medium Pads	1	1
1		1072662	Swingaway Lateral Support Assembly (Tarsys) (Pair) Cane Clamp Hardware with Large Pads	1	1
1	A	1072585-NLA	NLA - Swingaway Lateral Support Assembly (Tarsys) (Pair) Multi Bar Hardware with Medium Pads	1	1
1	A	1072586-NLA	NLA - Swingaway Lateral Support Assembly (Tarsys) (Pair) Multi Bar Hardware with Large Pads	1	1
2	B	1072660-NLA	NLA - Clamp, Cane - Right	1	1
2	B	1077191-NLA	NLA - Clamp, Cane - Left	1	1
2	B	1072588-NLA	NLA - Multi-Bar - Right	1	1
2	B	1072587-NLA	NLA - Multi-Bar - Left	1	1
3		1072592	Bracket, Extension Offset, Black (2")	1	1
4		1077187-NLA	NLA - Bracket, Extension Offset, Black (1")	1	1
5		1077186-NLA	NLA - Bracket, Extension Offset, Black (1/2")	1	1
6		1077185	Bracket, Flush Mount, Black	1	1
7	C	1077192	Clamp, Cane - Right	1	1
7	C	1077193	Clamp, Cane - Left	1	1
7	C	1077194-NLA	NLA - Multi-Bar - Right	1	1
7	C	1077195-NLA	NLA - Multi-Bar - Left	1	1
8		0051206-NLA	NLA - Screw, Machine, Hex Socket, Button Head (1/4-20 x 1-1/4)	1	4
9		1084411-NLA	NLA - Screw, Socket Flat Head (#10-32 x 1/2")	1	2
10		1102887	Screw, Socket Flat Head (1/4-20 x 1/2")	1	2
11		1072593-NLA	NLA - Screw, Allen Button Head (#10-32 x 5/8")	1	1
12		1077190-NLA	NLA - Bracket, Mounting, Black	1	1
13		1084411-NLA	NLA - Screw, Socket Flat Head (#10-32 x 1/2")	1	1
14		0063522-NLA	NLA - Bar, Multi-Attachment, A.B.S. Curved Back, 3/4" Spacing	1	2
15		0052906-NLA	NLA - Screw, Socket Button Head (1/4-20 x 3/4")	1	1
16		1096489-NLA	NLA - Bracket, Swingaway, Cane Clamp, Black - Right	1	1
16		1096490-NLA	NLA - Bracket, Swingaway, Cane Clamp, Black - Left	1	1
16		1077188	Bracket, Swingaway - Right	1	1
16		1077189-NLA	NLA - Bracket, Swingaway - Left	1	1
17		1072589	Pad, Lateral Support - Medium (6" W x 4" H)	1	1
17		1072590	Pad, Lateral Support - Large (6" W x 5" H)	1	1
18		0050806-NLA	NLA - Screw, Socket Flat Head (1/4-20 x 1-1/2)	1	4
19		0159402	Spacer, Block (1 x 3/4 x 1/2")	1	4

Lateral Support Assembly
Tarsys
Basic Tilt and Tilt Only

NOTE:	A - Items 18 and 19 are not included with swingaway lateral assemblies. B - Swingaway Bracket Assembly with Offset Brackets C - Swingaway Bracket Assembly LESS Offset Brackets

Lateral Support Assembly
Tarsys
Basic Recline (4XP) or Tilt/Recline and Recline Only

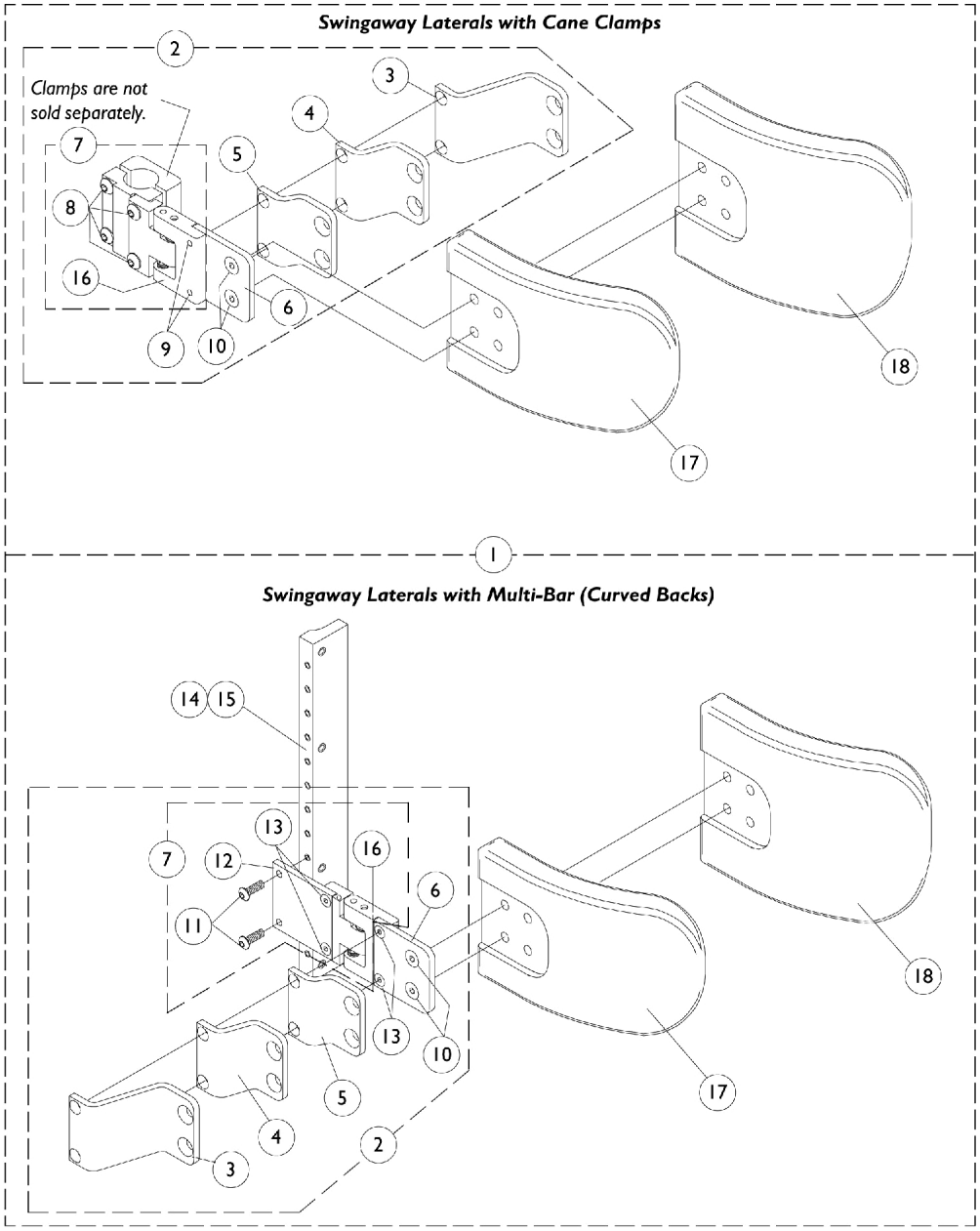

Lateral Support Assembly
Tarsys
Basic Recline (4XP) or Tilt/Recline and Recline Only

Item Number	Note	Part Number	Description	Quantity Per Package	Quantity Per Assembly
1		1072661	Swingaway Lateral Support Assembly (Tarsys) (Pair) Cane Clamp Hardware with Medium Pads	1	1
1		1072662	Swingaway Lateral Support Assembly (Tarsys) (Pair) Cane Clamp Hardware with Large Pads	1	1
1		1072585-NLA	NLA - Swingaway Lateral Support Assembly (Tarsys) (Pair) Multi Bar Hardware with Medium Pads	1	1
1		1072586-NLA	NLA - Swingaway Lateral Support Assembly (Tarsys) (Pair) Multi Bar Hardware with Large Pads	1	1
2	A	1072660-NLA	NLA - Clamp, Cane - Right	1	1
2	A	1077191-NLA	NLA - Clamp, Cane - Left	1	1
2	A	1072588-NLA	NLA - Multi-Bar - Right	1	1
2	A	1072587-NLA	NLA - Multi-Bar - Left	1	1
3		1072592	Bracket, Extension Offset, Black (2")	1	1
4	C	See Note	See Footnote	1	1
5		1077186-NLA	NLA - Bracket, Extension Offset, Black (1/2")	1	1
6		1077185	Bracket, Flush Mount, Black	1	1
7	B	1077192	Clamp, Cane - Right	1	1
7	B	1077193	Clamp, Cane - Left	1	1
7	B	1077194-NLA	NLA - Multi-Bar - Right	1	1
7	B	1077195-NLA	NLA - Multi-Bar - Left	1	1
8		0051206-NLA	NLA - Screw, Machine, Hex Socket, Button Head (1/4-20 x 1-1/4)	1	4
9		1084411-NLA	NLA - Screw, Socket Flat Head (#10-32 x 1/2")	1	2
10		1102887	Screw, Socket Flat Head (1/4-20 x 1/2")	1	2
11		1072593-NLA	NLA - Screw, Allen Button Head (#10-32 x 5/8")	1	2
12		1077190-NLA	NLA - Bracket, Mounting, Black	1	1
13		1084411-NLA	NLA - Screw, Socket Flat Head (#10-32 x 1/2")	1	4
14		0063522-NLA	NLA - Bar, Multi-Attachment, A.B.S. Curved Back, 3/4" Spacing	1	1
15		0052906-NLA	NLA - Screw, Socket Button Head (1/4-20 x 3/4")	1	2
16		1096489-NLA	NLA - Bracket, Swingaway, Cane Clamp, Black - Right	1	1
16		1096490-NLA	NLA - Bracket, Swingaway, Cane Clamp, Black - Left	1	1
16		1077188	Bracket, Swingaway - Right	1	1
16		1077189-NLA	NLA - Bracket, Swingaway - Left	1	1
17		1072589	Pad, Lateral Support - Medium (6" W x 4" H)	1	1
18		1072590	Pad, Lateral Support - Large (6" W x 5" H)	1	1

NOTE: A - Swingaway Bracket Assembly with Offset Brackets
B - Swingaway Bracket Assembly LESS Offset Brackets
C - No longer offered as an individual service part.

Vent Tray Assembly (Before 5/1/96)
Basic Tilt and Tilt Only

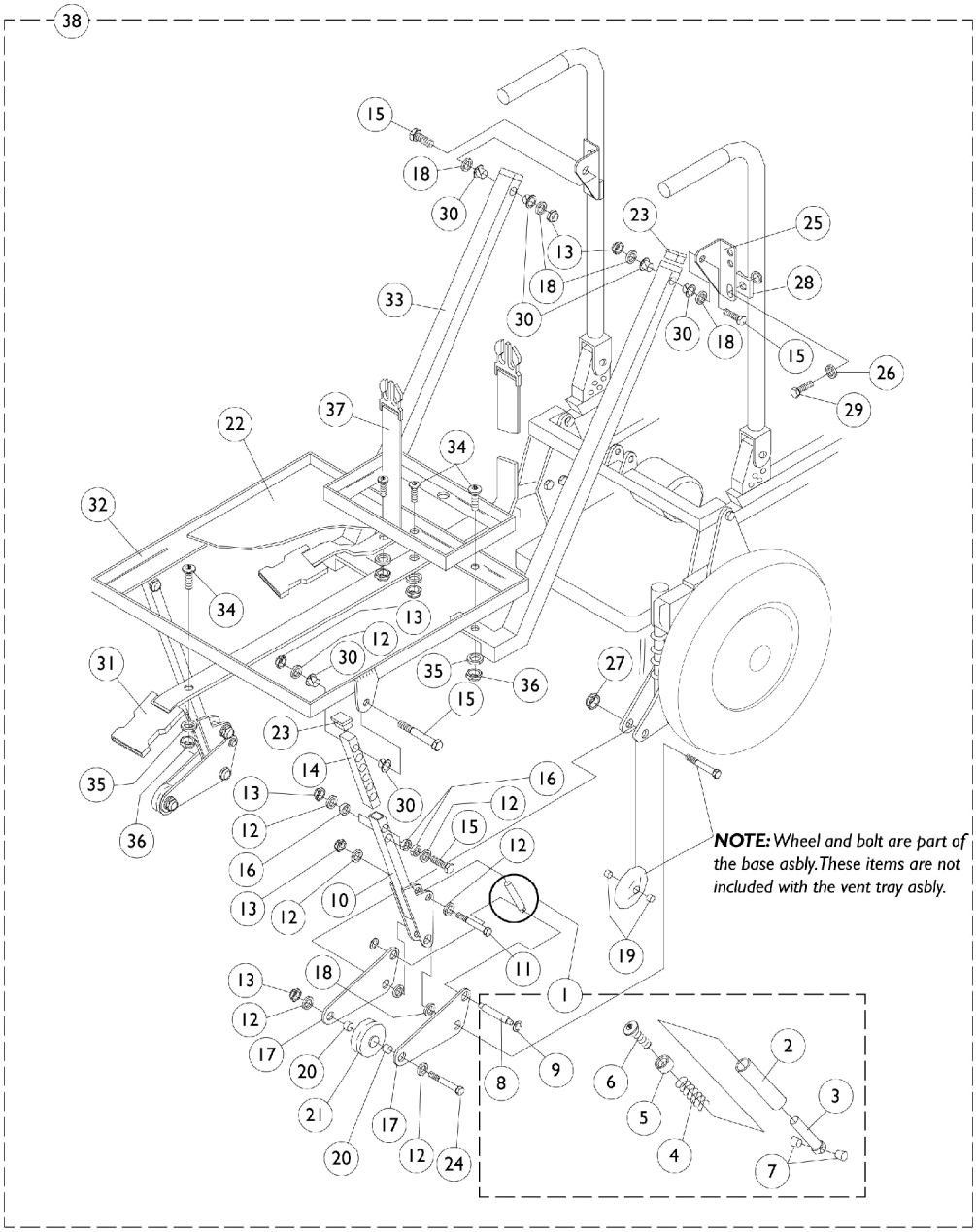

Vent Tray Assembly (Before 5/1/96)
Basic Tilt and Tilt Only

Item Number	Note	Part Number	Description	Quantity Per Package	Quantity Per Assembly
1		1072928-NLA	NLA - Mechanism, Anti-Tip Spring	1	2
2		0057202-NLA	NLA - Housing, Spring	1	2
3		0057305-NLA	NLA - Plunger, Spring	1	2
4		0159200-NLA	NLA - Spring, Compression	1	2
5		0057405-NLA	NLA - Retainer, Spring Plunger	1	2
6		1077248-NLA	NLA - Screw, Socket Head (1/4-20 x 1")	1	2
7		0184522-NLA	NLA - Spacer, Spring Plunger	1	4
8		0184422-NLA	NLA - Shaft, Spring Plunger Retaining	1	2
9		0226300-NLA	NLA - Ring, Retaining (1/4")	1	4
10		0181602-NLA	NLA - Leg, Vent Battery Tray, Lower, Black	1	2
11		1024793-NLA	NLA - Screw, Hex Head (1/4-20 x 1-3/4")	1	2
12		0050406	Washer, Flat (1/4 x 5/8 x 1/16")	1	18
13		7930333	Locknut (1/4-20)	25	12
14		0028302-NLA	NLA - Tube, Lower Support	1	2
15		0051006-NLA	NLA - Screw, Hex Head Full Thread (1/4-20 x 1-1/2")	1	8
16		0050506-NLA	NLA - Lockwasher, High Collar, Split (1/4")	1	12
17		0181502-NLA	NLA - Plate, Anti-Tip Wheel	1	4
18		0050100-NLA	NLA - Washer, Nylon Flat (1/4 x 1/2 x 1/16")	1	8
19		0185500-NLA	NLA - Spacer, Anti-Tip	1	4
20		0186000-NLA	NLA - Spacer, Wheel	1	4
21		1055684-NLA	NLA - Wheel, Anti-Tip 2"	1	2
22		0282619-NLA	NLA - Pan, Vent Tray, Black	1	1
23		0062200-NLA	NLA - Plug Button, Square (3/4")	1	4
24		0052306-NLA	NLA - Screw, Hex Head (1/4-20 x 2-1/4")	1	2
25		0003002-NLA	NLA - Bracket, Mounting, Black - Right	1	1
25		0002902-NLA	NLA - Bracket, Mounting, Black - Left	1	1
26		1007453	Lockwasher, Split (1/4")	1	4
27		0055006-NLA	NLA - Locknut, Low Profile (5/16-18)	1	2
28		0049824-NLA	NLA - Spacer, Coved (1/4 x 3/4 x 7/16")	1	2
29		0051706-NLA	NLA - Screw, Hex Head (1/4-20 x 1")	1	4
30		0059800-NLA	NLA - Bearing, Nylon	1	8
31		0004900-NLA	NLA - Strap, Battery (65" Long)	1	1
32		0181402-NLA	NLA - Tray, Vent/ Battery	1	1
33		0181802-NLA	NLA - Frame, Vent Hanger - Right	1	1
33		0181702-NLA	NLA - Frame, Vent Hanger - Left	1	1
34		1077249-NLA	NLA - Screw, Socket Head (#10-32 x 3/4")	1	8
35		0224806-NLA	NLA - Washer (#10)	1	8
36		7930332-NLA	NLA - Locknut, High Profile (#10-32)	25	8
37		0004800-NLA	NLA - Strap, Battery (55" Long)	1	1
38	A	1077273-NLA	NLA - Vent/Battery Tray Assembly	1	1

NOTE: A - See vent tray assembly dated after 4/30/96.

Vent Tray Assembly (Before 5/1/96)
Basic Recline 4XP or Tilt/Recline and Recline Only

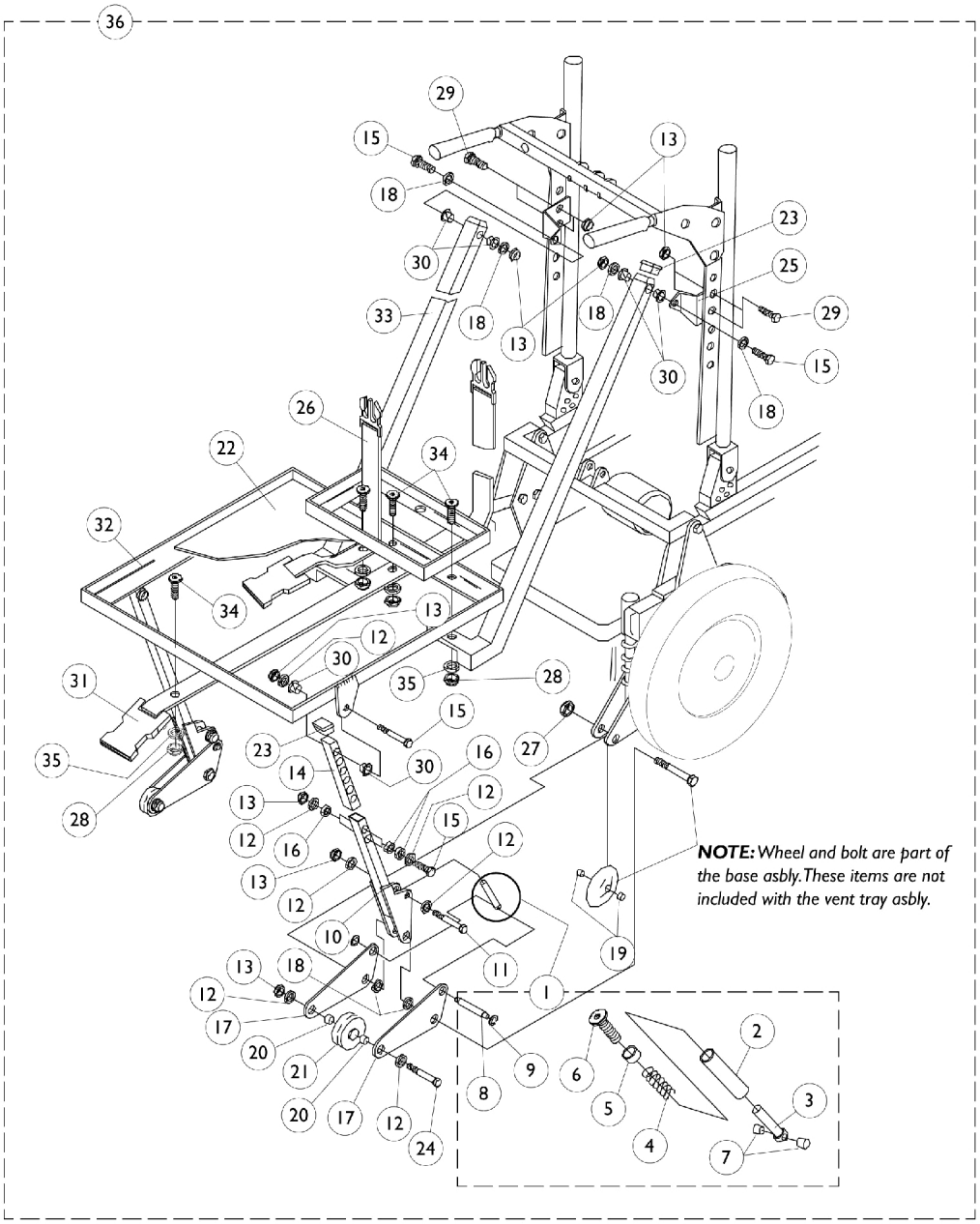

Vent Tray Assembly (Before 5/1/96)

Basic Recline 4XP or Tilt/Recline and Recline Only

Item Number	Note	Part Number	Description	Quantity Per Package	Quantity Per Assembly
1		1072928-NLA	NLA - Mechanism, Anti-Tip Spring	1	2
2		0057202-NLA	NLA - Housing, Spring	1	2
3		0057305-NLA	NLA - Plunger, Spring	1	2
4		0159200-NLA	NLA - Spring, Compression	1	2
5		0057405-NLA	NLA - Retainer, Spring Plunger	1	2
6		1077248-NLA	NLA - Screw, Socket Head (1/4-20 x 1")	1	2
7		0184522-NLA	NLA - Spacer, Spring Plunger	1	4
8		0184422-NLA	NLA - Shaft, Spring Plunger Retaining	1	2
9		0226300-NLA	NLA - Ring, Retaining (1/4")	1	4
10		0181602-NLA	NLA - Leg, Vent Battery Tray, Lower, Black	1	2
11		1024793-NLA	NLA - Screw, Hex Head (1/4-20 x 1-3/4")	1	2
12		0050406	Washer, Flat (1/4 x 5/8 x 1/16")	1	18
13		7930333	Locknut (1/4-20)	25	16
14		0028302-NLA	NLA - Tube, Lower Support	1	2
15		0051006-NLA	NLA - Screw, Hex Head Full Thread (1/4-20 x 1-1/2")	1	8
16		0050506-NLA	NLA - Lockwasher, High Collar, Split (1/4")	1	12
17		0181502-NLA	NLA - Plate, Anti-Tip Wheel	1	4
18		0050100-NLA	NLA - Washer, Nylon Flat (1/4 x 1/2 x 1/16")	1	8
19		0185500-NLA	NLA - Spacer, Anti-Tip	1	4
20		0186000-NLA	NLA - Spacer, Wheel	1	4
21		1055684-NLA	NLA - Wheel, Anti-Tip 2"	1	2
22		0282619-NLA	NLA - Pan, Vent Tray, Black	1	1
23		0062200-NLA	NLA - Plug Button, Square (3/4")	1	4
24		0052306-NLA	NLA - Screw, Hex Head (1/4-20 x 2-1/4")	1	2
25		0182502-NLA	NLA - Plate, Top Mounting	1	2
26		0004800-NLA	NLA - Strap, Battery (55" Long)	1	1
27		0055006-NLA	NLA - Locknut, Low Profile (5/16-18)	1	2
28		7930332-NLA	NLA - Locknut, High Profile (#10-32)	25	8
29		0053006-NLA	NLA - Screw, Hex Head (1/4-20 x 3/4")	1	4
30		0059800-NLA	NLA - Bearing, Nylon	1	8
31		0004900-NLA	NLA - Strap, Battery (65" Long)	1	1
32		0181402-NLA	NLA - Tray, Vent/ Battery	1	1
33		0181802-NLA	NLA - Frame, Vent Hanger - Right	1	1
33		0181702-NLA	NLA - Frame, Vent Hanger - Left	1	1
34		1077249-NLA	NLA - Screw, Socket Head (#10-32 x 3/4")	1	8
35		0224806-NLA	NLA - Washer (#10)	1	8
36	A	1077265-NLA	NLA - Vent/Battery Tray Assembly	1	1

NOTE: A - See vent tray assembly dated after 4/30/96

Vent Tray Assembly (After 4/30/96)
Basic Tilt and Tilt Only

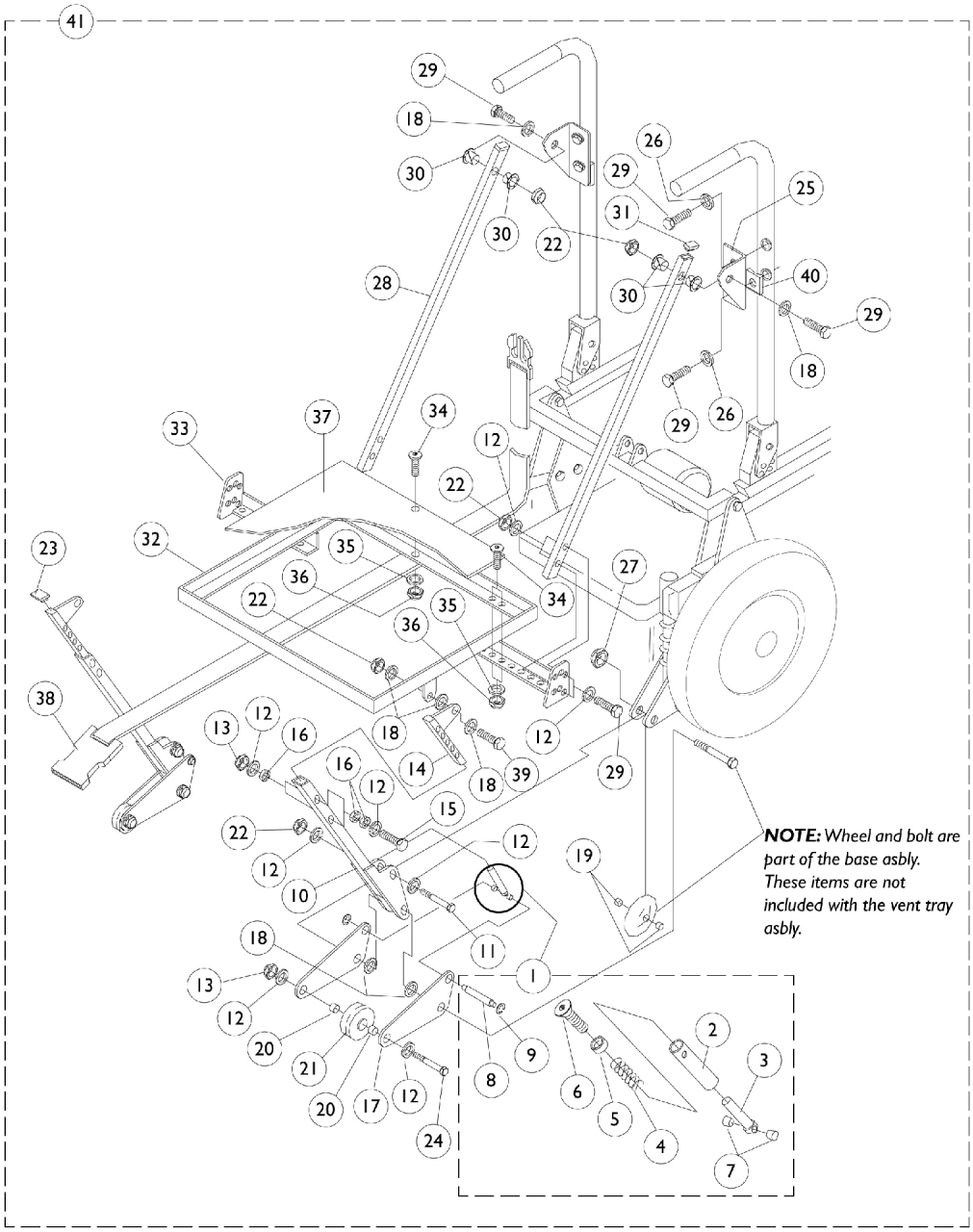

Vent Tray Assembly (After 4/30/96)
Basic Tilt and Tilt Only

Item Number	Note	Part Number	Description	Quantity Per Package	Quantity Per Assembly
1	A	1072928-NLA	NLA - Mechanism, Anti-Tip Spring	1	2
2		0057202-NLA	NLA - Housing, Spring	1	2
3		0057305-NLA	NLA - Plunger, Spring	1	2
4		0159200-NLA	NLA - Spring, Compression	1	2
5		0057405-NLA	NLA - Retainer, Spring Plunger	1	2
6		1077248-NLA	NLA - Screw, Socket Head (1/4-20 x 1")	1	2
7		0184522-NLA	NLA - Spacer, Spring Plunger	1	4
8		0184422-NLA	NLA - Shaft, Spring Plunger Retaining	1	2
9		0226300-NLA	NLA - Ring, Retaining (1/4")	25	4
10		0300102-NLA	NLA - Leg Weldment, Lower	1	2
11		1037610	Screw, Hex Head (1/4-20 x 1-5/8")	1	2
12		0050406	Washer, Flat (1/4 x 5/8 x 1/16")	1	24
13		7930333	Locknut (1/4-20)	25	10
14		0300202-NLA	NLA - Tube, Adjustment, Lower Leg, Black	1	2
15		0051006-NLA	NLA - Screw, Hex Head Full Thread (1/4-20 x 1-1/2")	1	4
16		0050506-NLA	NLA - Lockwasher, High Collar, Split (1/4")	1	12
17		0181502-NLA	NLA - Plate, Anti-Tip Wheel	1	4
18		0050100-NLA	NLA - Washer, Nylon Flat (1/4 x 1/2 x 1/16")	1	12
19		0185500-NLA	NLA - Spacer, Anti-Tip	1	4
20		0186000-NLA	NLA - Spacer, Wheel	1	4
21		1055684-NLA	NLA - Wheel, Anti-Tip 2"	1	2
22		7930323-NLA	NLA - Package, Locknut (1/4-20)	25	10
23		0062200-NLA	NLA - Plug Button, Square (3/4")	1	2
24		0052306-NLA	NLA - Screw, Hex Head (1/4-20 x 2-1/4")	1	2
25		0301302	Plate, Angle Mounting (Tilt) Right	1	1
25		0301202	Plate, Angle Mounting (Tilt) Left	1	1
26		1007453	Lockwasher, Split (1/4")	1	1
27		0055006-NLA	NLA - Locknut, Low Profile (5/16-18)	1	4
28		0301102-NLA	NLA - Tube, Tilt Hanger	1	2
29		0051706-NLA	NLA - Screw, Hex Head (1/4-20 x 1")	1	2
30		0059800-NLA	NLA - Bearing, Nylon	1	10
31		0302800-NLA	NLA - Plug Button, Rectangular (1 x 1/2")	1	4
32		0299202-NLA	NLA - Tray, Vent	1	2
33		0300902-NLA	NLA - Wing, Adjustment - Right	1	1
33		0300802-NLA	NLA - Wing, Adjustment - Left	1	1
34		1077249-NLA	NLA - Screw, Socket Head (#10-32 x 3/4")	1	6
35		0224806-NLA	NLA - Washer (#10)	1	6
36		1025735	Locknut (#10-32)	1	6
37		0301619-NLA	NLA - Plate, ABS Bottom	1	1
38		0004900-NLA	NLA - Strap, Battery (65" Long)	1	1
39		0053006-NLA	NLA - Screw, Hex Head (1/4-20 x 3/4")	1	2
40		0049824-NLA	NLA - Spacer, Coved (1/4 x 3/4 x 7/16")	1	2

Vent Tray Assembly (After 4/30/96)

Basic Tilt and Tilt Only

Item Number	Note	Part Number	Description	Quantity Per	
				Package	Assembly
41	B	0307600-NLA	NLA - Vent Tray Assembly (Includesox Hanger Assembly)	1	1

NOTE: A - Includes items 2-9
B - Includes Battery Box Hanger Assembly

When ordering a vent tray assembly for storm bases manufactured after 6/30/98 you must order the anti-tip extension assemblies located on Anti-Tip Wheel Extension Assembly page.

Vent Tray Assembly
(After 4/30/96)
Basic Recline 4XP or Tilt/Recline and Recline Only

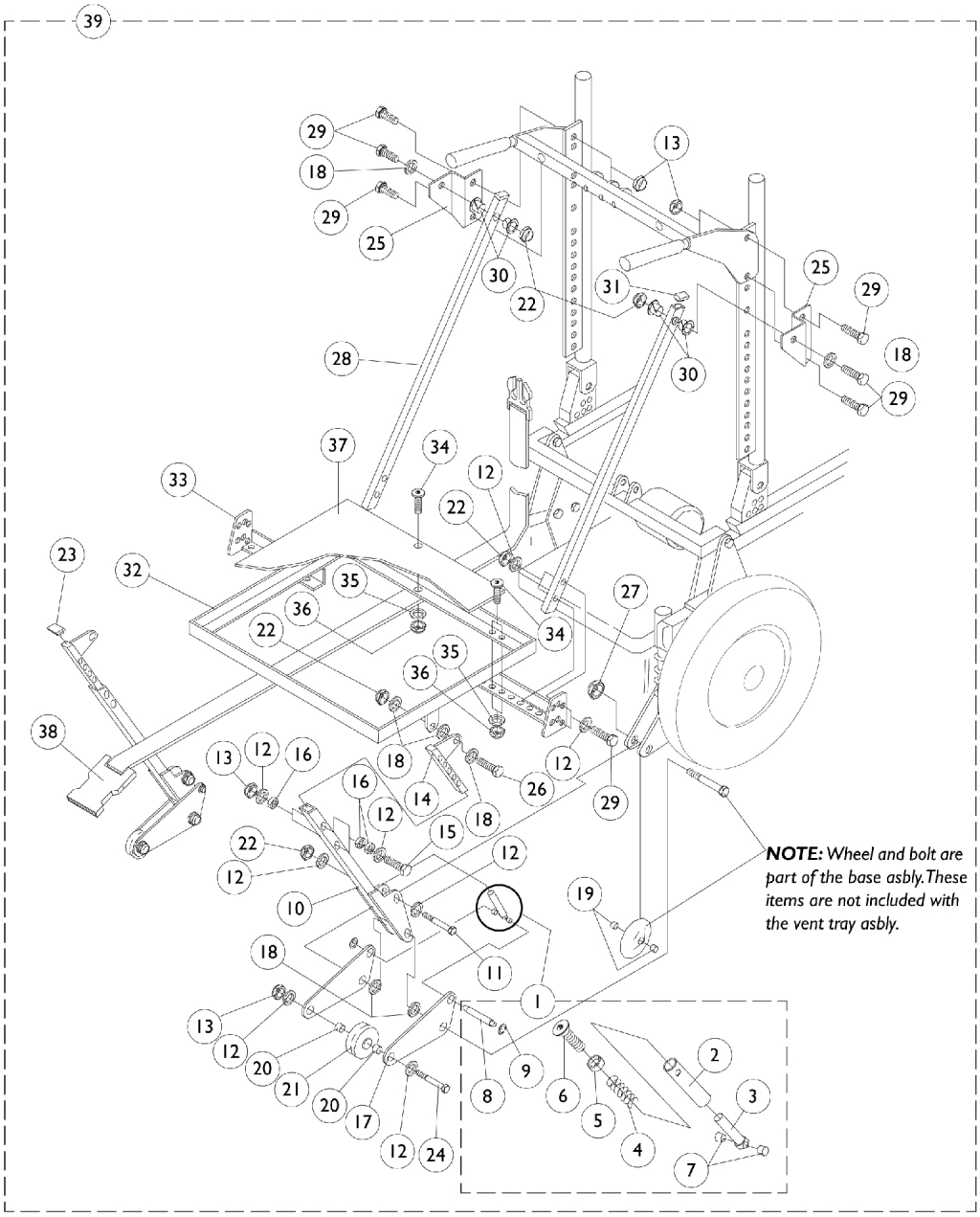

Vent Tray Assembly
(After 4/30/96)
Basic Recline 4XP or Tilt/Recline and Recline Only

Item Number	Note	Part Number	Description	Quantity Per	
				Package	Assembly
1	A	1072928-NLA	NLA - Mechanism, Anti-Tip Spring	1	2
2		0057202-NLA	NLA - Housing, Spring	1	2
3		0057305-NLA	NLA - Plunger, Spring	1	2
4		0159200-NLA	NLA - Spring, Compression	1	2
5		0057405-NLA	NLA - Retainer, Spring Plunger	1	2
6		1077248-NLA	NLA - Screw, Socket Head (1/4-20 x 1")	1	2
7		0184522-NLA	NLA - Spacer, Spring Plunger	1	4
8		0184422-NLA	NLA - Shaft, Spring Plunger Retaining	1	2
9		0226300-NLA	NLA - Ring, Retaining (1/4")	1	4
10		0300102-NLA	NLA - Leg Weldment, Lower	1	2
11		1037610	Screw, Hex Head (1/4-20 x 1-5/8")	1	2
12		0050406	Washer, Flat (1/4 x 5/8 x 1/16")	1	24
13		7930333	Locknut (1/4-20)	25	10
14		0300202-NLA	NLA - Tube, Adjustment, Lower Leg, Black	1	2
15		0051006-NLA	NLA - Screw, Hex Head Full Thread (1/4-20 x 1-1/2")	1	4
16		0050506-NLA	NLA - Lockwasher, High Collar, Split (1/4")	1	12
17		0181502-NLA	NLA - Plate, Anti-Tip Wheel	1	4
18		0050100-NLA	NLA - Washer, Nylon Flat (1/4 x 1/2 x 1/16")	1	12
19		0185500-NLA	NLA - Spacer, Anti-Tip	1	4
20		0186000-NLA	NLA - Spacer, Wheel	1	4
21		1055684-NLA	NLA - Wheel, Anti-Tip 2"	1	2
22		7930323-NLA	NLA - Package, Locknut (1/4-20)	25	10
23		0062200-NLA	NLA - Plug Button, Square (3/4")	1	2
24		0052306-NLA	NLA - Screw, Hex Head (1/4-20 x 2-1/4")	1	2
25		0299002-NLA	NLA - Plate, Offset Mounting (Tilt/ Recline) Right	1	1
25		0298902	Plate, Offset Mounting (Tilt/ Recline) Left	1	1
26		1007453	Lockwasher, Split (1/4")	1	2
27		0055006-NLA	NLA - Locknut, Low Profile (5/16-18)	1	2
28		0301002-NLA	NLA - Tube, Hanger, Tilt/Recline	1	2
29		0051706-NLA	NLA - Screw, Hex Head (1/4-20 x 1")	1	10
30		0059800-NLA	NLA - Bearing, Nylon	1	4
31		0302800-NLA	NLA - Plug Button, Rectangular (1 x 1/2")	1	2
32		0299202-NLA	NLA - Tray, Vent	1	1
33		0300902-NLA	NLA - Wing, Adjustment - Right	1	1
33		0300802-NLA	NLA - Wing, Adjustment - Left	1	1
34		1077249-NLA	NLA - Screw, Socket Head (#10-32 x 3/4")	1	6
35		0224806-NLA	NLA - Washer (#10)	1	6
36		1025735	Locknut (#10-32)	1	6
37		0301619-NLA	NLA - Plate, ABS Bottom	1	1
38		0004900-NLA	NLA - Strap, Battery (65" Long)	1	1

Vent Tray Assembly
(After 4/30/96)
Basic Recline 4XP or Tilt/Recline and Recline Only

Item Number	Note	Part Number	Description	Quantity Per	
				Package	Assembly
39	B	0307500-NLA	NLA - Vent Tray Assembly (Includes Battery Box Hanger Assembly)	1	1

NOTE: A - Includes items 2-9
B - Includes Battery Box Hanger Assembly

When ordering a vent tray assembly for storm bases manufactured after 6/30/98 you must order the anti-tip extension assemblies located on Anti-Tip Wheel Extension Assembly page.

Vent Tray Battery Box and Basket Assembly (After 4/30/96)

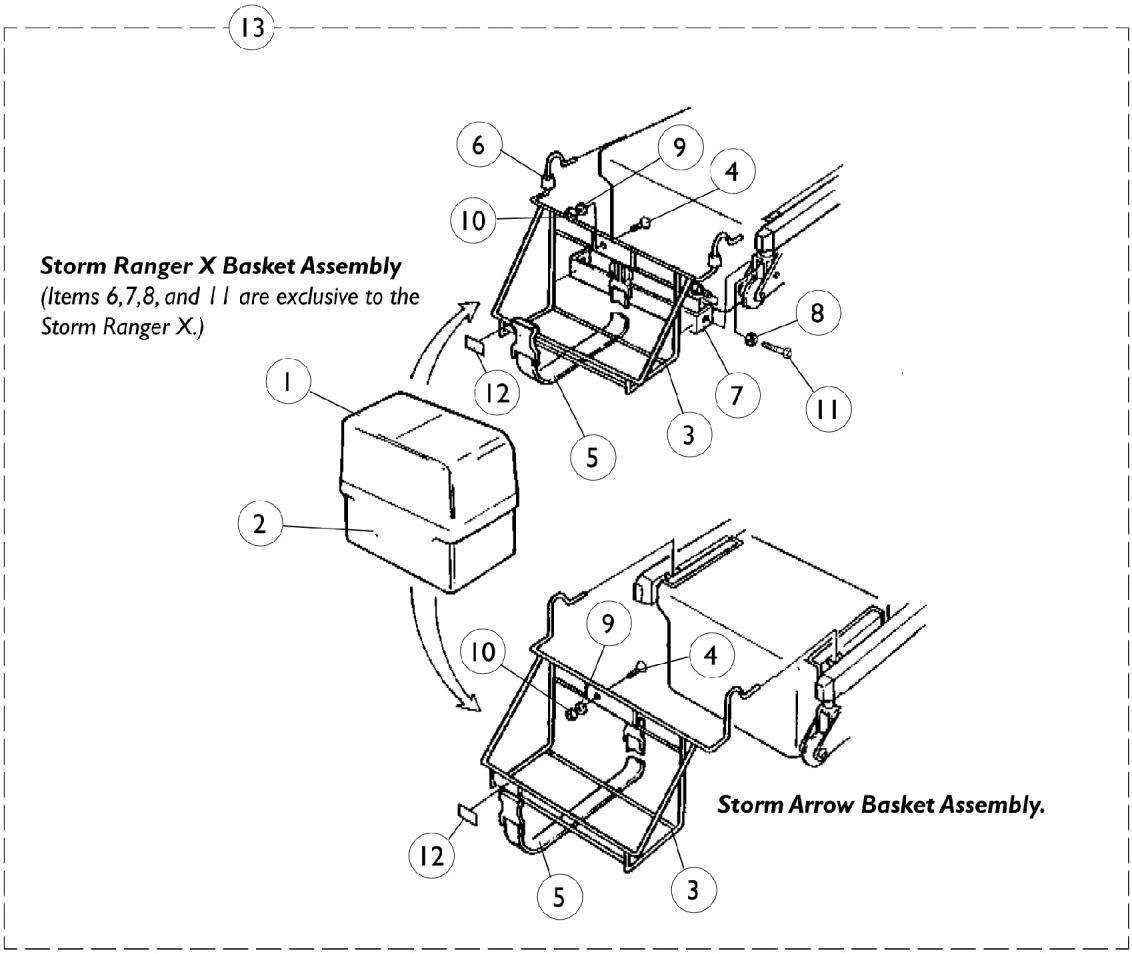

Vent Tray Battery Box and Basket Assembly (After 4/30/96)

Item Number	Note	Part Number	Description	Quantity Per	
				Package	Assembly
1		1095747	Top, Battery Box	1	1
2		1057944	Battery Box Bottom with Strap, 22NF	1	1
3		0299902-NLA	NLA - Basket, Battery Box	1	1
4		0131906-NLA	NLA - Screw, Phillips Pan Head (#10-32 x 3/8")	1	1
5		0296200-NLA	NLA - Strap with Buckel (40")	1	1
6		0060000-NLA	NLA - Bumper, Rubber	1	2
7		0301502-NLA	NLA - Bracket, Battery Basket (Ranger X Only)	1	1
8		0055006-NLA	NLA - Locknut, Low Profile (5/16-18)	1	2
9		0224806-NLA	NLA - Washer (#10)	1	1
10		7930332-NLA	NLA - Locknut, High Profile (#10-32)	25	1
11		0258706-NLA	NLA - Screw, Hex Head (5/16-18 x 3/4") Ranger X Only)	1	2
12		0215400-NLA	NLA - Decal, Tarsys	1	1
13		1072929-NLA	NLA - Vent Tray Battery Box Assembly	1	1

Anti-Tip Wheel Extension Assembly

Vent Tray Option Only
(After 6/30/98)
2nd Generation Suspension Arms

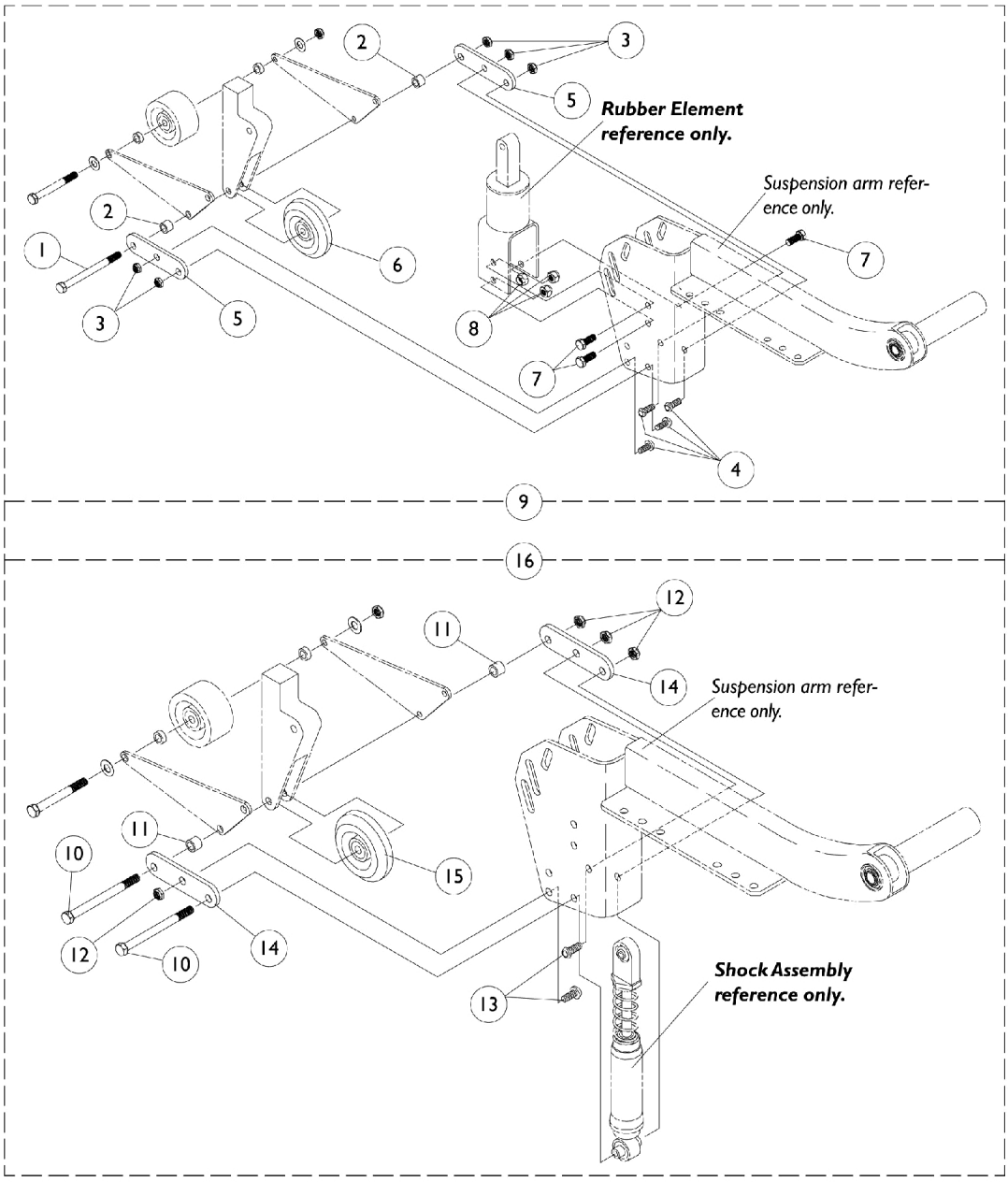

Anti-Tip Wheel Extension Assembly

Vent Tray Option Only
(After 6/30/98)
2nd Generation Suspension Arms

Anti-Tip for Rubber Element

Item Number	Note	Part Number	Description	Quantity Per	
				Package	Assembly
1		1070397-NLA	NLA - Screw, Hex Head (5/16-18 x 3-1/4")	1	2
2		1079782-NLA	NLA - Spacer (21/64 x 1/2 x 3/8")	1	4
3		1026158	Locknut (5/16-18)	1	10
4		1065215	Screw, Socket Button Head w/ Patch (5/16-18 x 3/4")	1	8
5		1079778-NLA	NLA - Bracket, Extension, Black	1	4
6		1032190-NLA	NLA - Wheel Assembly (3" x 1")	1	2
7		1039860	Screw, Hex Head w/ Patch (5/16-18 x 3/4")	1	6
8		1028769	Locknut (5/16-18)	1	6
9		1079780-NLA	NLA - Anti-Tipper Extension Assembly	1	1

Anti-Tip for Shock Assembly

Item Number	Note	Part Number	Description	Quantity Per	
				Package	Assembly
10		1070397-NLA	NLA - Screw, Hex Head (5/16-18 x 3-1/4")	1	4
11		1079782-NLA	NLA - Spacer (21/64 x 1/2 x 3/8")	1	4
12		1026158	Locknut (5/16-18)	1	8
13		1065215	Screw, Socket Button Head w/ Patch (5/16-18 x 3/4")	1	4
14		1079778-NLA	NLA - Bracket, Extension, Black	1	4
15		1032190-NLA	NLA - Wheel Assembly (3" x 1")	1	2
16		1079781-NLA	NLA - Anti-Tipper Extension Assembly	1	1

Retrofit Kits for Storm Power Bases

All Systems

NOTE: Must be a qualified Tarsys Dealer to order retrofit kits.
NOTE: Must have serial number with all retrofit kits.
NOTE: Must indicate what legrest will be used with the power legrest retrofit kit and order the legrest and hanger weldments separately except for Genius legest kit part number 0220700.

PART NUMBER	ADDING:	TO EXISTING:
0262100-NLA	Tilt	Recline Powerbase
0262200-NLA	Tilt	Recline/VSR Powerbase
8880262300-NLA	Recline	Tilt Powerbase
8880262400-NLA	Recline/VSR	Tilt Powerbase
8880262500-NLA	VSR	Recline Powerbase
0262600-NLA	Power Legs Combined See Note(s) A	Tilt Powerbase without T.R.C.M.
0262700	Power Legs Combined See Note(s) A	Recline Powerbase without T.R.C.M.
0262800-NLA	Power Legs Combined	Recline/VSR Powerbase without T.R.C.M.
0262900-NLA	Power Legs Individual See Note(s) A	Tilt Powerbase without T.R.C.M.
0263000-NLA	Power Legs Individual See Note(s) A	Recline Powerbase without T.R.C.M.
0263100-NLA	Power Legs Individual See Note(s) A	Recline/VSR Powerbase without T.R.C.M.
1088122-NLA	Power Legs Individual or Combined See Note(s) A	All Systems with T.R.C.M.
0220700-NLA	Power Legs for Genius Legrest (Legrest and Hanger Assemblies Included)	All Storm Base Systems without T.R.C.M.(Less Basic Recline-4XP and Basic Tilt)
1088123	Power Legs for Genius Legrest (Legrest and Hanger Assembies-Not Included)	All Storm Base Systems with T.R.C.M.(Less Basic Recline 4XP and Basic Tilt)

NOTE: A - For AT5544 Legrest and Hanger Assemblies that are not included.

Must be a qualified Tarsys dealer to order Retrofit Kits.
Must have serial number with all Retrofit Kits.
Must indicate what legrest will be used with the power legrest retrofit kit and order the legrest and hanger weldments separately except for Genius legrest kit part number 0220700.

Power Wheelchair Tool Kit

Power Wheelchair Tool Kit

Item Number	Note	Part Number	Description	Quantity Per	
				Package	Assembly
1		1125222-NLA	NLA - Kit, Power Wheelchair Tool Includes: 1 ea. Multimeter with Leads 1 ea. Locator, Protractor/Angle Magnetic Base 1 ea. Instructions, MKIV Programmer 1 ea. Wire, Grounding with Hand Strap and Clip 1 ea. Leads, 1" Test 1 ea. Light, Pen with Invacare Logo 1 ea. Tape Measure, Compact with Invacare Logo 1 ea. Screwdriver, Pen-Size Phillips/Flat Head 1 ea. Cable, Virtual Service Charger/Modem	1	1

Miscellaneous Accessories

NOTE: Profile back is not offered on a Basic Recline 4XP

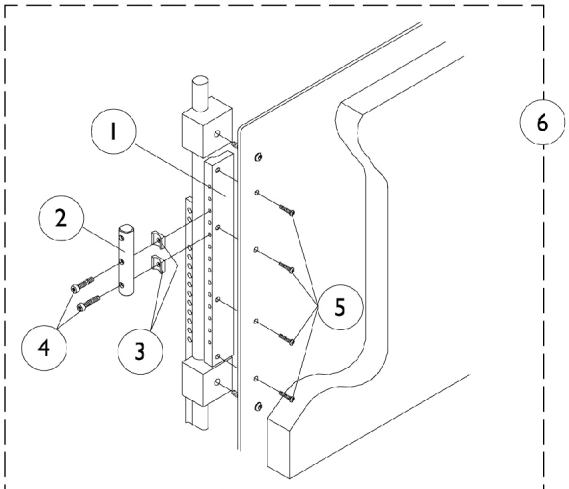

A.B.S. Curved Back Universal Adapter Assembly

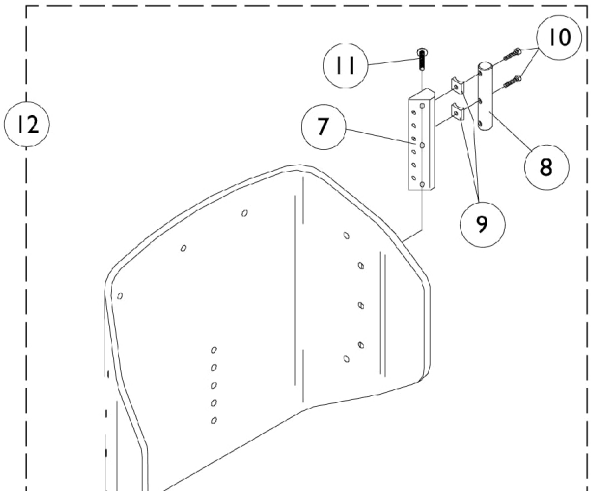

Profile Back Universal Adapter Assembly

Miscellaneous Accessories

NOTE: Profile back is not offered on a Basic Recline 4XP

Universal Adapter Assembly, A.B.S. Curved Back

Item Number	Note	Part Number	Description	Quantity Per Package	Quantity Per Assembly
1		0260522-NLA	NLA - Bar, Multi-Attachment, A.B.S. Curved Back, 5/8" Spacing	1	1
1	A	1072851	Bar, Multi-Attachment, A.B.S. Curved Back, 5/8" Spacing	1	1
1		0063522-NLA	NLA - Bar, Multi-Attachment, A.B.S. Curved Back, 3/4" Spacing	1	1
1	A	1072850	Bar, Multi-Attachment, A.B.S. Curved Back, 3/4" Spacing	1	1
2		0178922	Bar, Universal Adapter Mounting	1	1
3		0049824-NLA	NLA - Spacer, Coved (1/4 x 3/4 x 7/16")	1	2
4		0258406-NLA	NLA - Screw, Socket Head, Cap (#10-32 x 1-1/4")	1	2
5		0052906-NLA	NLA - Screw, Socket Button Head (1/4-20 x 3/4")	1	4
6		0180400	Universal Adapter Assembly, ABS Curved Back, 5/8" Spacing	1	1
6	A	1084663	Universal Adapter Assembly, ABS Curved Back, 5/8" Spacing	1	1
6		0138200-NLA	NLA - Universal Adapter Assembly, ABS Curved Back, 3/4" Spacing	1	1
6	A	1084664	Universal Adapter Assembly, ABS Curved Back, 3/4" Spacing	1	1

NOTE: A - Use for 14" Back Heights Only.

Universal Adapter Assembly, Profile Back

Item Number	Note	Part Number	Description	Quantity Per Package	Quantity Per Assembly
7		0260422	Bar, Multi-Attachment	1	1
7		0179022	Bar, Multi-Attachment	1	1
8		0178922	Bar, Universal Adapter Mounting	1	1
9		0049824-NLA	NLA - Spacer, Coved (1/4 x 3/4 x 7/16")	1	2
10		0258406-NLA	NLA - Screw, Socket Head, Cap (#10-32 x 1-1/4")	1	2
11		1077793-NLA	NLA - Screw, Socket Head (1/4-20 x 3/4")	1	3
12		0311300	Universal Adapter Assembly, Profile Back, 5/8" Spacing	1	1
12		0180300	Universal Adapter Assembly, Profile Back, 3/4" Spacing	1	1
	A	0202400-NLA	NLA - Back Pack, Basic Tilt and Tilt Only	1	1
	A	0143700	Back Pack, Basic Recline 4XP	1	1
	A	0143800-NLA	NLA - Back Pack, Tilt/Recline and Recline Only	1	1
	A	0020200-NLA	NLA - Kit, Legrest with Screws, Otto Bock (6" W x 9" H)	1	1
	A	0020300-NLA	NLA - Adapter Plate, Otto Bock Legrest Pad	1	1

NOTE: A - Not Shown

Invacare Corporation

www.invacare.com

One Invacare Way
Elyria, Oh USA
44036-2125
800-333-6900

Technical Support
800-832-4707
Florida Technical Support
407-321-5630

Customer Service
800-333-6900

© 2022 Invacare Corporation. All rights reserved. Republication, duplication or modification in whole or in part is prohibited without prior written permission from Invacare. Trademarks are identified by ™ and ®. All trademarks are owned by or licensed to Invacare Corporation or its subsidiaries unless otherwise noted.
(Revised 05/3/22)

Form No. 96-194