Pivot/Slide Tube w/ Footplate

AS4A,AL4A/C, AHL4A/C, TR12, TR14, TRP14, TLX4A/C/S, TLXH4A/C, T934A/C/S, T944A/C Legrests

NOTE: Due to the possiblity of various manufacturing dates for Tracer IV Wheelchairs built with a serial # starting with "03H" or "03I", replacement parts will need to be ordered thru an Invacare Parts Specialist at 1-800-333-6900.

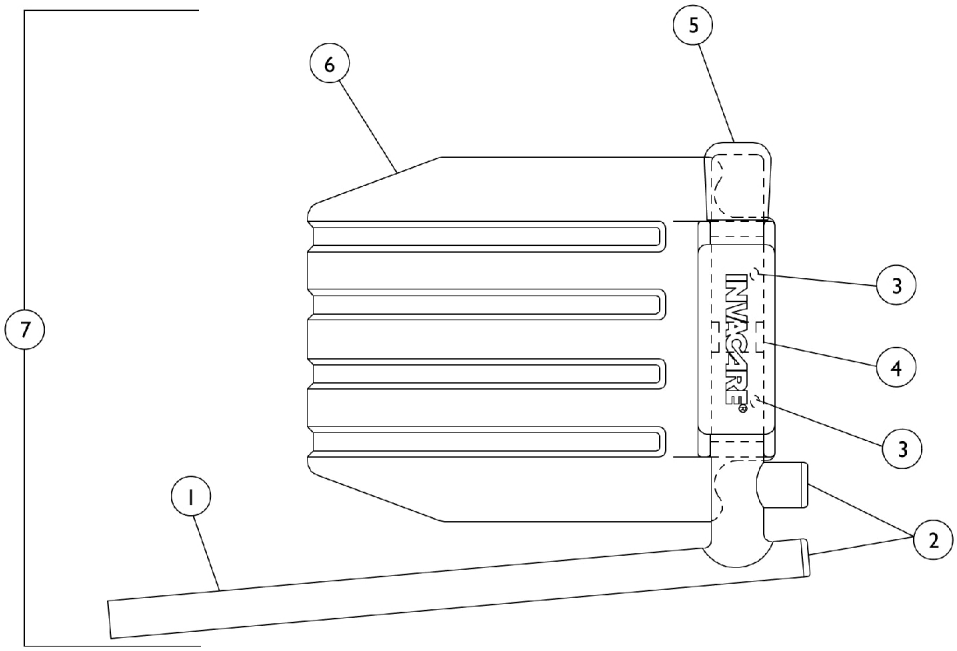

Item Number	Note	Part Number	Description	Quantity Per	
				Package	Assembly
1		7500085-NLA	NLA - Pivot/Slide Tube w/ Plug Button Assembly, Chrome	1	1
1		1041526	Pivot/Slide Tube w/ Plug Button Assembly, Chrome	1	1
2		1027097	Plug Button, Black (3/4")	1	2
2		1018133	Plug Button, Black (5/8")	1	1
3		40120X001	Screw, Phillips Pan Head (#8-32 x 3/8")	1	1
4		1006981	Spring, Tension	1	1
5		1016346	Cap, End, Tube, Black (7/8")	1	1
6		1015178	Footplate, Composite, Black (6" W x 7-53/64" L)	1	1
6	A	44200X059	Footplate, Aluminum, Small, Black (6-3/4" W x 6" L)	1	1
6	A	44200X027	Footplate, Aluminum, Medium, Black (7-3/4" W x 6" L)	1	1
6		44200X025	Footplate, Aluminum, Extra Large, Black - Right (8" W x 8-1/2" L)	1	1
6		44200X026	Footplate, Aluminum, Extra Large, Black - Left (8" W x 8-1/2" L)	1	1
7		See Chart	Pivot Slide Tube with Footplate	1	1

NOTE: A - Aluminum footplates on chairs built before 2/96 had a "Ball Burnlsh" finish. Footplates after 1/96 now have a black finish. When replacing one ball burnish footplate it is suggested that two new (black) footplates be ordered.

Pivot/Slide Tube w/ Footplate

AS4A,AL4A/C, AHL4A/C, TR12, TR14, TRP14, TLX4A/C/S, TLXH4A/C, T934A/C/S, T944A/C Legrests

NOTE: Due to the possiblity of various manufacturing dates for Tracer IV Wheelchairs built with a serial # starting with "03H" or "03I", replacement parts will need to be ordered thru an Invacare Parts Specialist at 1-800-333-6900.

Pivot Slide Tube with Footplate

Model Numbers	Chair Width	Pivot Slide Tube with Aluminium Footplate	Pivot Slide Tube with Composite Footplate	Pivot Slide Tube with Extra Large Footplate
T934A, T943C, TLXH3A, TLXH3C	16"-20" - Right	1017243-NLA	1017224-NLA	1031926-NLA
T934A, T943C, TLXH3A, TLXH3C	16"-20" - Left	1017244-NLA	1017225-NLA	1031927-NLA
TR12	16"-18" - Right	N/A	1017233-NLA	N/A
TR12	16"-20" - Left	N/A	1017234-NLA	N/A
TR14	16"-20" - Right	N/A	1017233-NLA	N/A
TR14	16"-20" - Left	N/A	1017234-NLA	N/A
T934C, TRP14	16"-20" - Right	N/A	1017233-NLA	N/A
T934C, TRP14	16"-20" - Left	N/A	1017234-NLA	N/A
T934S, TLX4S	14" - Right	1020234-NLA	N/A	N/A
T934S, TLX4S	14" - Left	1020235-NLA	N/A	N/A
T934A, T934C, TLX4A, TLX4C	16"-20" - Right	1017237-NLA	1017233-NLA	1031934-NLA
T934A, T934C, TLX4A, TLX4C	16"-20" - Left	1017237-NLA	1017234-NLA	1031935-NLA
T934A, T934C, TLX4A, TLX4C	20"-24" - Right	1031934-NLA	N/A	1031934-NLA
T934A, T934C, TLX4A, TLX4C	20"-24" - Left	1031935-NLA	N/A	1031935-NLA
T944A, T944C, TLXH4A, TLXH4C	16"-20" - Right	1017237-NLA	1017233-NLA	1031934-NLA
T944A, T944C, TLXH4A, TLXH4C	16"-20" - Left	1017238-NLA	1017238-NLA	1031935-NLA
AS4A	14" - Right	1023905-NLA	N/A	N/A
AS4A	14" - Left	1023906-NLA	N/A	N/A
AL4A, AL4C	16"-20" - Right	1023907	1023909-NLA	1035456
AL4A, AL4C	16"-20" - Left	1023908	1023910-NLA	1035457
AL4A, AL4C	20"-24" - Right	1035456	N/A	1035456
AL4A, AL4C	20"-24" - Left	1035457	N/A	1035457
AHL4A, AHL4C	16"-20" - Right	1023907	1023909-NLA	1035456
AHL4A, AHL4C	16"-20" - Left	1023908	1023910-NLA	1035457
NOTE: Orders for Front Riggings in pairs must be placed through the Configutor. Please contact an Invacare Service Parts Specialist at 1-800-333-6900.				