Label Locations For TRRO and TRBKTS Options

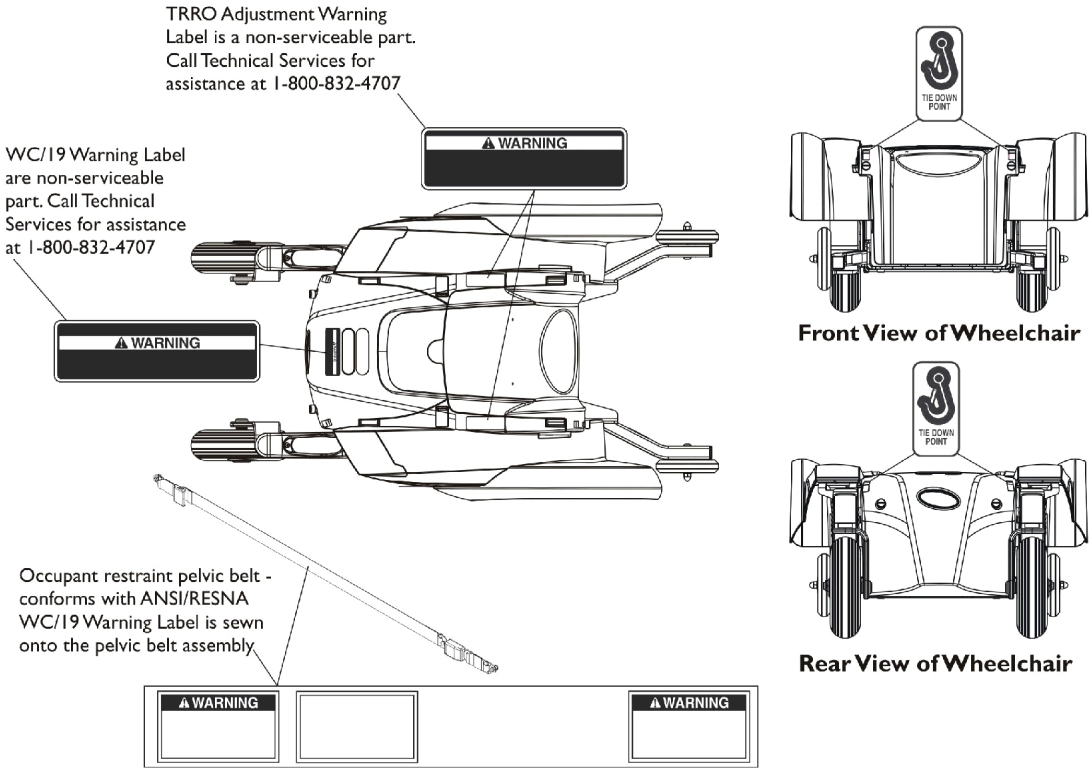

TRRO Option Label Locations

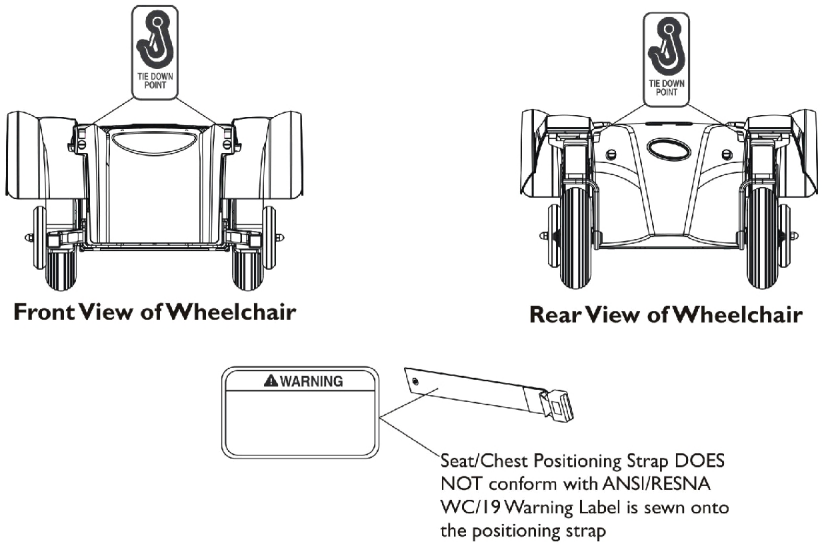

TRBKTS Option Label Locations