Parts Catalog

Issued: Nov 10, 2022

MyOn® HC

Medium Active Wheelchair

Yes, you can.

Parts Catalog Usage Guide

The information contained in this document is subject to change without notice. This catalog contains service parts for Form No. 16-043. If you have any questions regarding this catalog, please contact one of our Customer Service Representatives.

For Customer Service Support Call:
1-800-333-6900
For Faxed In Orders Call:
1-800-678-4682 or
1-440-366-0709
For Technical Service Call:
1-800-832-4707
Literature Can Be Found at:
www.invacare.com or
1-800-828-6272

SYMBOL DEFINITION

Throughout this catalog you will notice letters to draw your attention to specific footnotes which are located at the bottom of the page or below specified charts.

Examples:

A,B,C etc.	=	Special Comments
NOTE:	=	General information pertaining to that specific page
NLA	=	No Longer Available

HARDWARE MEASUREMENTS

The measurements for the hardware will be listed as follows:

Screws, Bolts	Diameter X Thread Count/Pitch X Length
Washers	Inside Diameter X Outside Diameter X Thickness
Spacers	Inside Diameter X Outside Diameter X Length

For your convenience, we have supplied an area for you to list your Invacare Representatives.

Name	Phone Numbers

© 2022 Invacare Corporation. All rights reserved. Republication, duplication or modification in whole or in part is prohibited without prior written permission from Invacare. Trademarks are identified by ™ and ®. All trademarks are owned by or licensed to Invacare Corporation or its subsidiaries unless otherwise noted.

TABLE of CONTENTS

Description	Page Number
Accessories - Anti-Tippers	107
Accessories - Calf Strap	109
Accessories - Cane/Crutch Holder	110
Accessories - Folding Backbrace	112
Accessories - Heel Strap w/ Hardware	111
Accessories - Luggage Holder	113
Accessories - Pumps	114
Accessories - Reflectors - Rear Wheels	115
Accessories - Seat Positioning	116
Accessories - Tipping Aid	117
Accessories - Tool Kit	119
Accessories - Travel/Storage Connector Strap	118
Armrest, Adjustable - Standard Hemi Dartex (ATHA)	72
Armrest, Swing Away - Adjustable, Removable - Desk Length Armpad (FBHAD)	66
Armrest, Swing Away - Adjustable, Removable, Full Length Armpad (FBHAF)	68
Armrest, Swing Away, Padded Handle (AT99)	70
Armrest, T-Style, Adjustable, Removable, Desk Length Armpad (HATD)	62
Armrest, T-Style, Adjustable, Removable, Full Length Armpad (HATF)	64
Backrest - Adjustable, Integrated Push Handle (ABH1416, ABH1619)	18
Backrest - Adjustable, No Pushhandle (HNDL4ADJ)	22
Backrest - Adjustable, Rearset Pushhandle (HNDLADJ57)	20

TABLE of CONTENTS

Description	Page Number
Backrest - Attaching Point (AAFD)	14
Backrest - Fixed, Push Handle (BP4G, B55G, BP55G)	16
Casters - Front	86
Fendered Side Guards (SIDEGRDS-FDR)	58
Footrest - Adjustable Angle and Depth - Fixed Frame (FXSTD, FXL, COMADFU)	50
Footrest - Adjustable Angle and Depth - High Mounted - Swing Away Frame (SAS, COMADFU)	53
Footrest - Adjustable Angle and Depth - Swing Away Frame (SAS, COMADFU)	47
Footrest - Fixed - High Mounted - Swing Away Frame (SAS, COMPFU)	44
Footrest - Fixed - Swing Away Frame (SAS, COMPFU)	38
Footrest - Fixed Frame (FXSTD, FXL, COMPFU)	41
Footrest - One Piece Footplate (OFPU)	56
Fork Support, Fixed Frame	84
Fork Support, Swing Away Frame	82
Forks, Caster - Fixed Frame	74
Forks, Caster - Swing Away Frame	78
Frames - Fixed - 80 Degree (HCFXD)	8
Frames - Folding System	10
Frames - Swingaway (HCSWING)	6
Front Riggings - 70 Degree Hanger (70SA)	32
Front Riggings - 80 Degree Hanger (80SA)	33
Front Riggings - 90 Degree Hanger (90SA)	34

TABLE of CONTENTS

Description	Page Number
Front Riggings - Amputee Legrest (AMPSPTP)	37
Front Riggings - Calf Pad (HPELVSWING)	36
Front Riggings - Elevating Legrest (HPELVSWING)	35
Side Guards (SIDEGRDS)	60
Upholstery - Backrest - Adjustable - Fixed and Integrated Push Handle (ADJBACKUPH)	30
Upholstery - Backrest - Adjustable - Telescoping Back Cane (FXBACKUPH)	28
Upholstery - Backrest - Adjustable - w/o Integrated and Rearset Push Handle (ADJBACKUPH)	26
Upholstery - Backrest - Fixed and Integrated Push Handle (FXBACKUPH)	23
Upholstery - Seat - Adjustable Depth (STDDAS)	12
Upholstery - Seat - Adjustable Tension and Depth (DAS)	13
Upholstery - Seat - Basic (NONADJS)	11
Wheel Locks - Attendant Operated, Hub Brake	106
Wheel Locks - Pull Brakes	105
Wheel Locks - Push Brakes	104
Wheels - Rear - Composite (22COM, 24COM)	88
Wheels - Rear - Hub Brake (22CS, 24CS)	91
Wheels - Rear - Lightweight (22LP, 24LP, 25LP)	89
Wheels - Rear - Service Parts - Composite (COM)	96
Wheels - Rear - Service Parts - Lightweight (LP)	98
Wheels - Rear - Service Parts - Spinergy (SPOX)	94
Wheels - Rear - Service Parts - Standard and Hub Brake (CS)	92

TABLE of CONTENTS

Description	Page Number
Wheels - Rear - Spinergy (24SPOX, 25SPOX)	90
Wheels - Rear - Spoke Protectors	103
Wheels - Rear - Spoked (22CS, 24CS)	87
Wheels - Rear - Supports	100
Wheels - Rear - Supports - Twion	101

Frames - Swingaway (HCSWING)

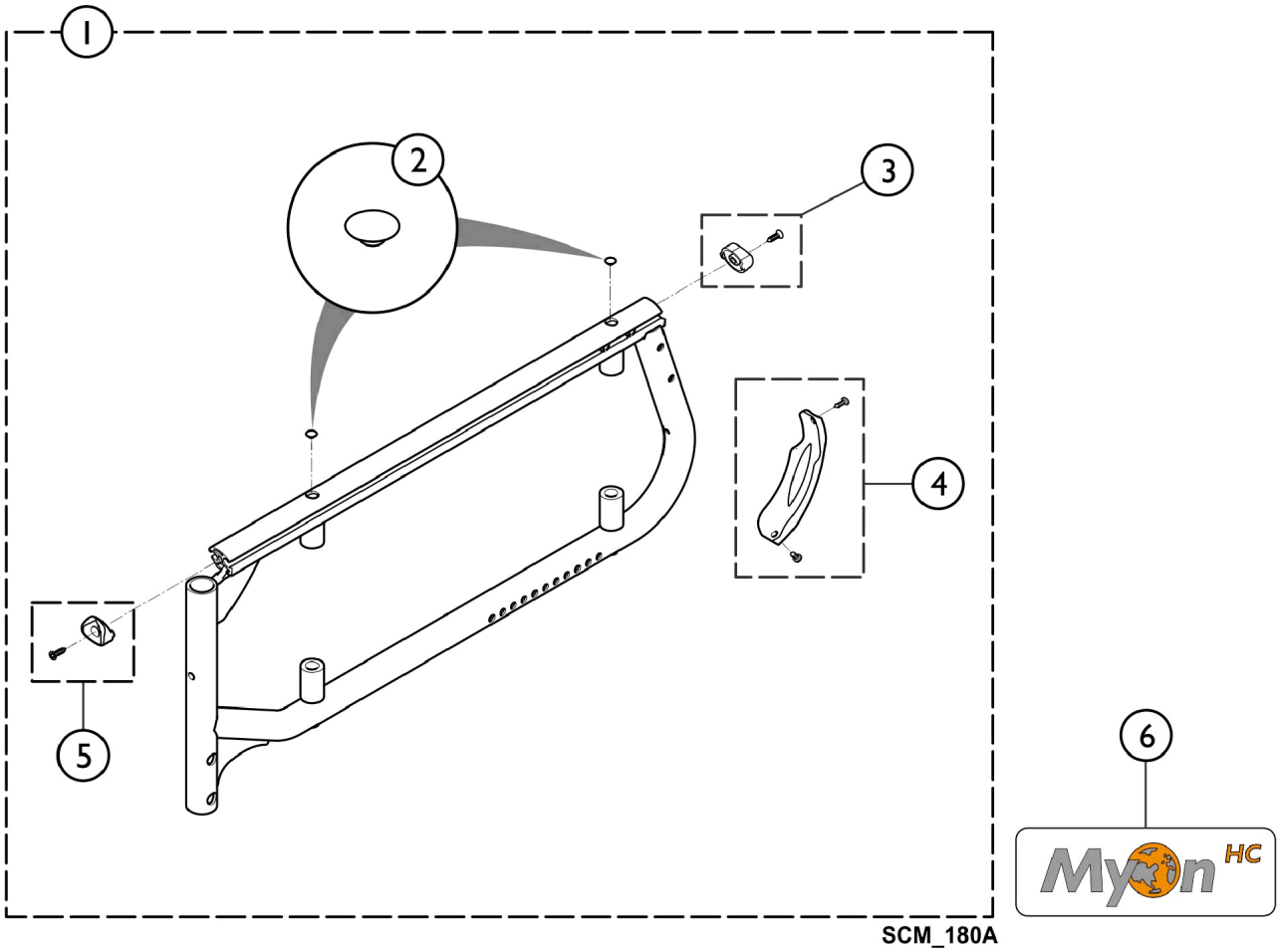

Item Number	Note	Part Number	Description	Quantity Per	
				Package	Assembly
1	A	See Chart	#1. Frames - Complete (Pair)	1	1
2		SP1590794	Kit, End Cap (Pair)	1	1
3		SP1589683	Kit, Rear Cap Reflector, Frame	1	1
4		SP1589684	Kit, Frame Plastic Protector	1	1
5		SP1589692	Kit, Front Cap , Frame	1	1
6		SP1584209	MyOn HC Label	1	1

NOTE: A - Kit includes items 2 - 5.

Frames - Swingaway (HCSWING)

#1. Frames - Complete (Pair)

Colors	14 - 16" D	17 - 18" D	19 - 20" D
Pearl White	SP1582901-0637	SP1582902-0637	SP1582903-0637
Anthracite Black	SP1582901-0609	SP1582902-0609	SP1582903-0609
Pop Blue	SP1582901-0643	SP1582902-0643	SP1582903-0643
Deep Red	SP1582901-0607	SP1582902-0607	SP1582903-0607
Extreme Green	SP1582901-0644	SP1582902-0644	SP1582903-0644
Hypnotic Purple	SP1582901-0645	SP1582902-0645	SP1582903-0645
Pearl Grey	SP1582901-0515	SP1582902-0515	SP1582903-0515
Matte Black	SP1582901-0646	SP1582902-0646	SP1582903-0646
Intense Yellow	SP1582901-0647	SP1582902-0647	SP1582903-0647
Vibrant Orange	SP1582901-0648	SP1582902-0648	SP1582903-0648

Frames - Fixed - 80 Degree (HCFXD)

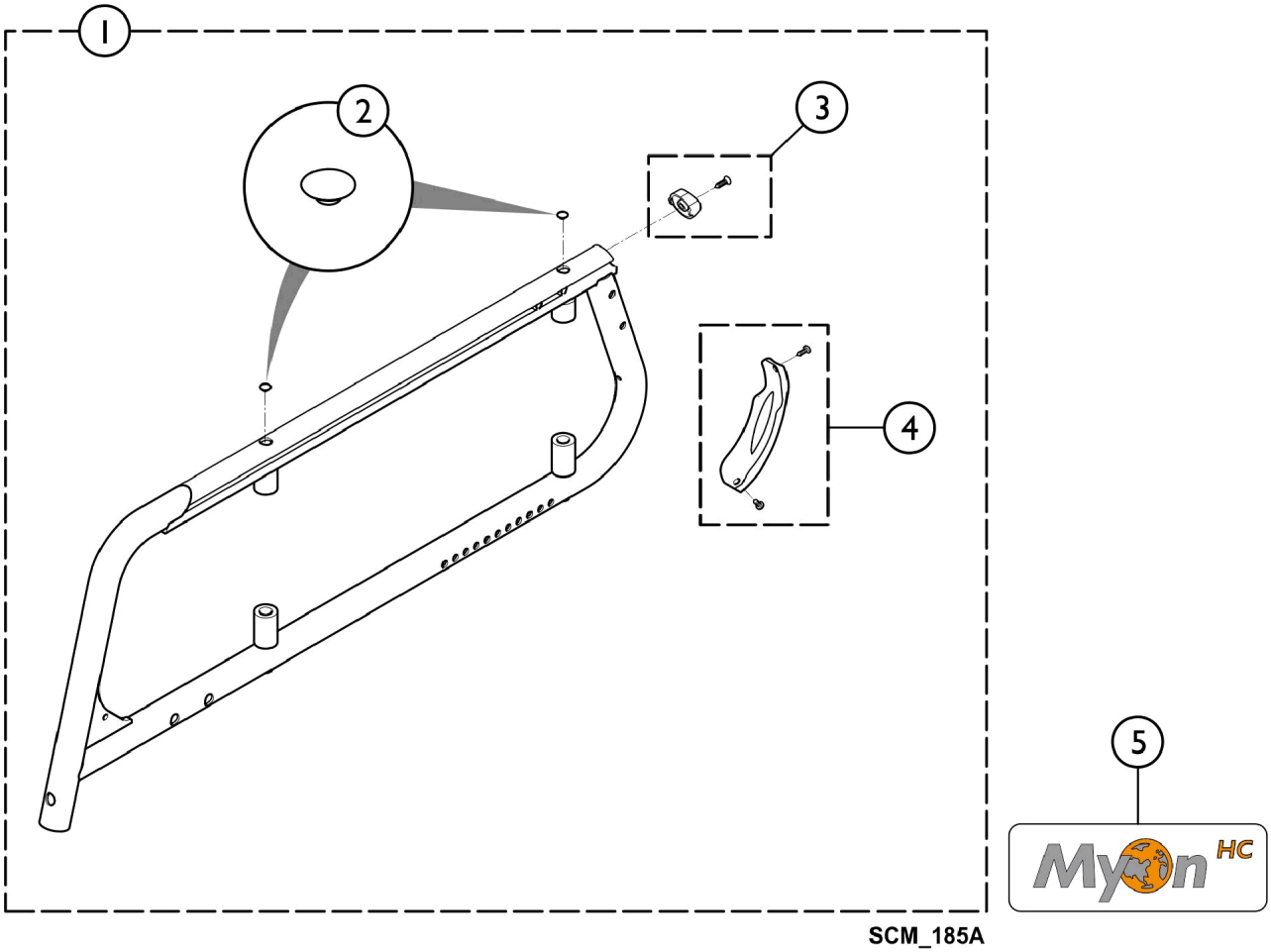

Item Number	Note	Part Number	Description	Quantity Per	
				Package	Assembly
1	A	See Chart	#1. Frames - Complete (Pair)	1	1
2		SP1590794	Kit, End Cap (Pair)	1	1
3		SP1589683	Kit, Rear Cap Reflector, Frame	1	1
4		SP1589684	Kit, Frame Plastic Protector	1	1
5		SP1584209	MyOn HC Label	1	1

NOTE: A - Kit includes items 2 - 4.

Frames - Fixed - 80 Degree (HCFXD)

#1. Frames - Complete (Pair)

Colors	14 - 16" D	17 - 18" D	19 - 20" D
Pearl White	SP1582904-0637	SP1582905-0637	SP1582906-0637
Anthracite Black	SP1582904-0609	SP1582905-0609	SP1582906-0609
Pop Blue	SP1582904-0643	SP1582905-0643	SP1582906-0643
Deep Red	SP1582904-0607	SP1582905-0607	SP1582906-0607
Extreme Green	SP1582904-0644	SP1582905-0644	SP1582906-0644
Hypnotic Purple	SP1582904-0645	SP1582905-0645	SP1582906-0645
Pearl Grey	SP1582904-0515	SP1582905-0515	SP1582906-0515
Matte Black	SP1582904-0646	SP1582905-0646	SP1582906-0646
Intense Yellow	SP1582904-0647	SP1582905-0647	SP1582906-0647
Vibrant Orange	SP1582904-0648	SP1582905-0648	SP1582906-0648

Frames - Folding System

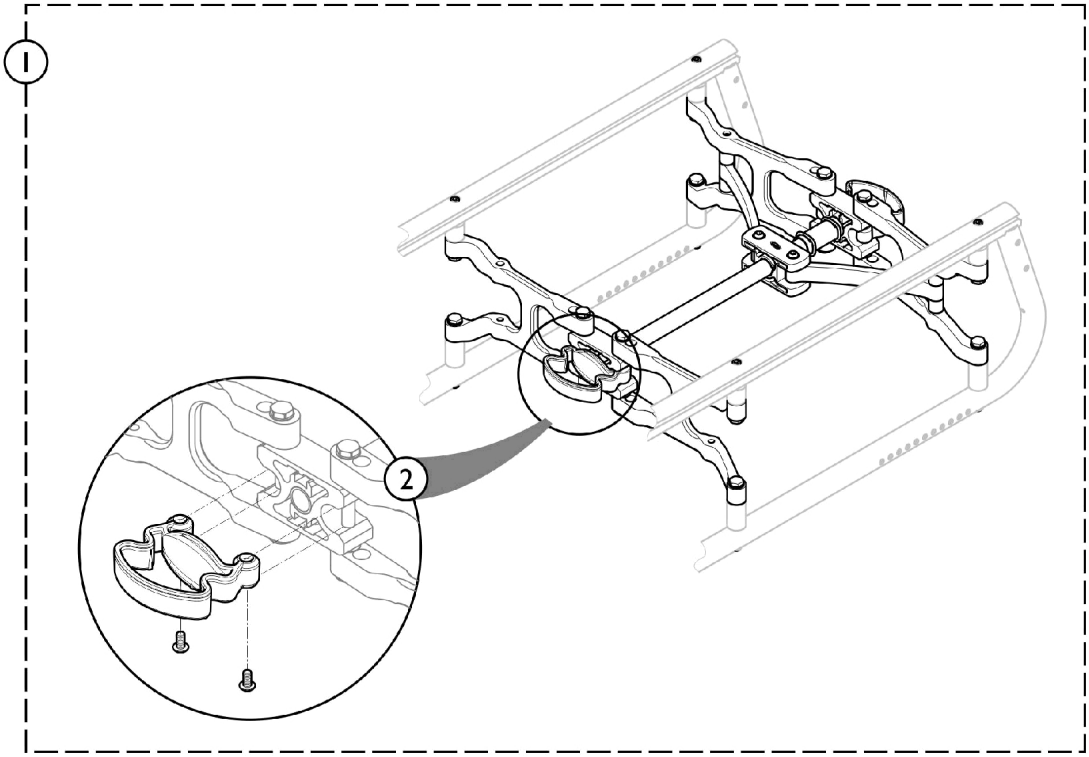

SCM_132A

Item Number	Note	Part Number	Description	Quantity Per	
				Package	Assembly
1	A	See Chart	#1. Frames - Folding System	1	1
2		SP1589803	Kit, Handle Plus Screw, Folding System	1	1

NOTE: A - Kit includes item 2.

#1. Frames - Folding System

Chair Width	14 - 16" D	16" D	17 - 18" D	19 - 20" D
12" W	SP1583191	N/A	SP1583192	N/A
13" W	SP1583193	N/A	SP1583194	N/A
14" W	SP1583195	N/A	SP1583196	SP1583197
15" W	SP1583198	N/A	SP1583199	SP1583252
16" W	SP1583253	N/A	SP1583260	SP1583261
17" W	SP1583262	N/A	SP1583263	SP1583264
18" W	SP1583265	N/A	SP1583266	SP1583267
19" W	SP1583268	N/A	SP1583269	SP1583270
20" W	N/A	SP1589975	SP1583271	SP1583272
21" W	N/A	SP1589976	SP1583313	SP1583314

Upholstery - Seat - Basic (NONADJS)

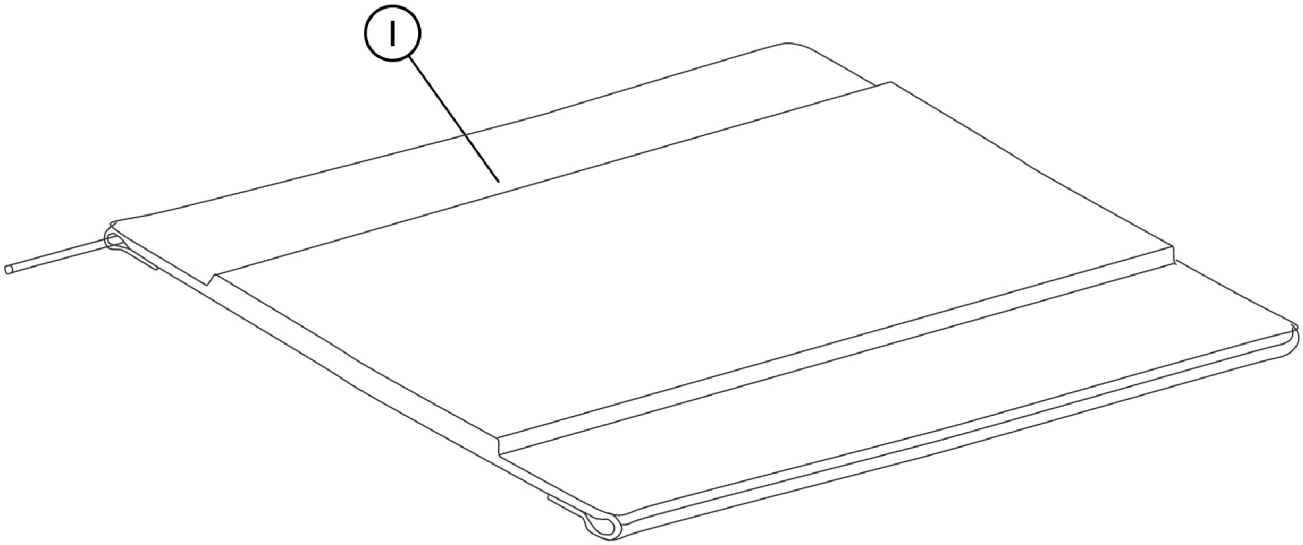

SCM_175C

Item Number	Note	Part Number	Description	Quantity Per	
				Package	Assembly
1		See Chart	#1. Upholstery - Seat - Complete	1	1

#1. Upholstery - Seat - Complete

Chair Width	12 - 13" W	14", 15", 16" W	17", 18", 19" W	20 - 21" W
14" D	SP1582200	SP1582205	SP1582299	N/A
15" D	SP1582201	SP1582220	SP1582300	N/A
16" D	SP1582202	SP1582221	SP1582301	SP1589983
17" D	SP1582203	SP1582222	SP1582376	SP1582380
18" D	SP1582204	SP1582223	SP1582377	SP1582381
19" D	N/A	SP1582224	SP1582378	SP1582382
20" D	N/A	SP1582225	SP1582379	SP1582405

Upholstery - Seat - Adjustable Depth (STDDAS)

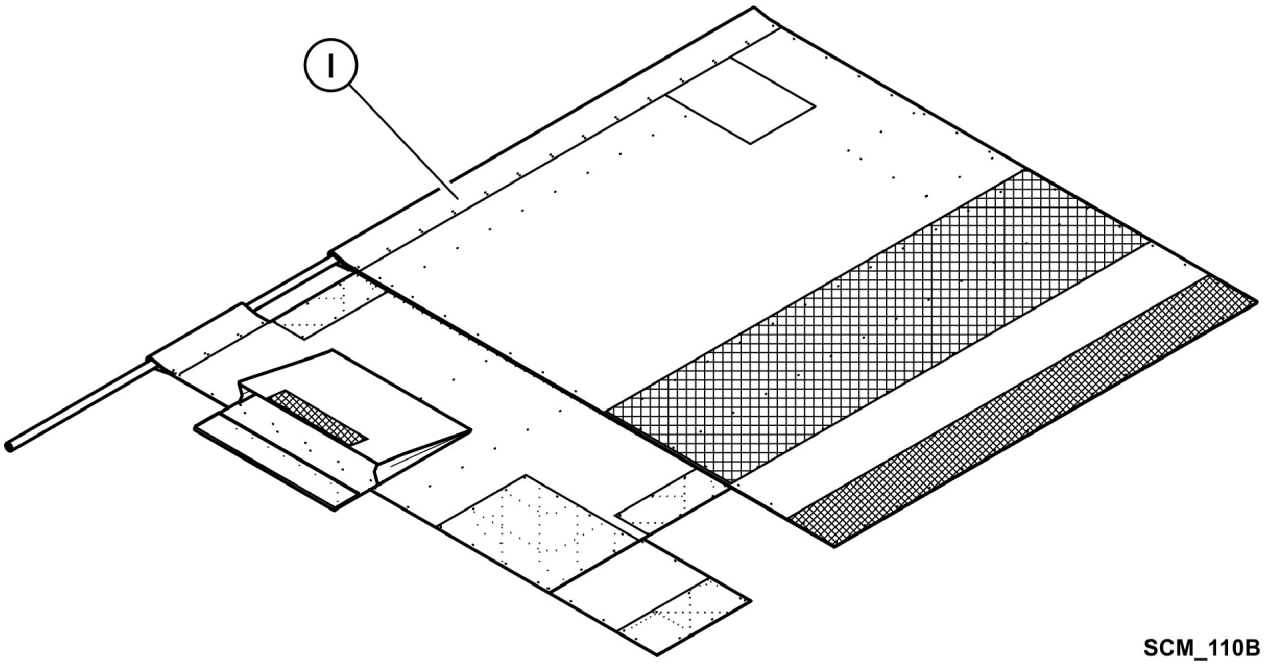

Item Number	Note	Part Number	Description	Quantity Per	
				Package	Assembly
1		See Chart	#1. Upholstery - Seat - Complete	1	1

#1. Upholstery - Seat - Complete

Chair Width	12 - 13" W	14 - 15" W	16 - 17" W	18 - 19" W	20 - 21" W
14 - 16" D	SP1582406	SP1582408	SP1582435	SP1582591	N/A
16 - 18" D	SP1582407	SP1582433	SP1582589	SP1582592	SP1582594
18 - 20" D	N/A	SP1582434	SP1582590	SP1582593	SP1582595

Upholstery - Seat - Adjustable Tension and Depth (DAS)

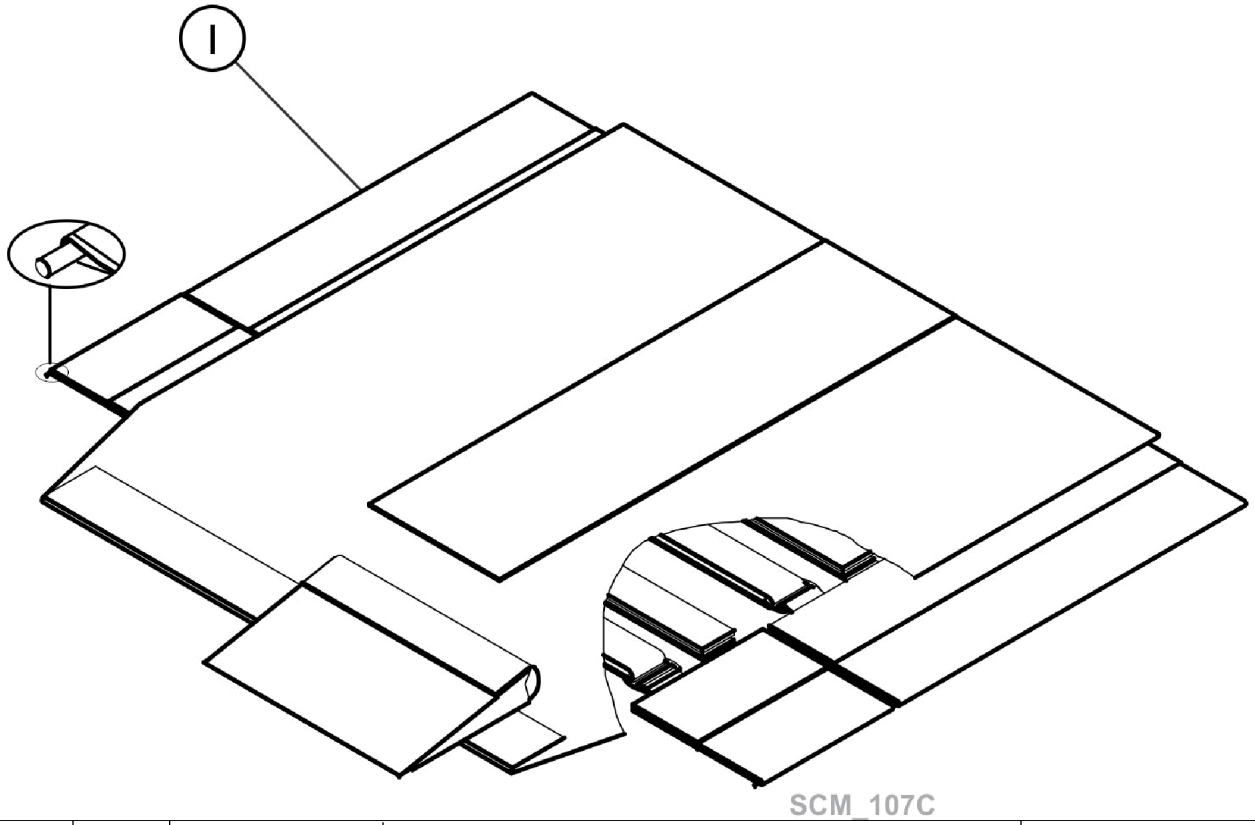

Item Number	Note	Part Number	Description	Quantity Per	
				Package	Assembly
1		See Chart	#1. Upholstery - Seat - Complete	1	1

#1. Upholstery - Seat - Complete

Chair Width	12 - 13" W	14 - 15" W	16 - 17" W	18 - 19" W	20 - 21" W
14 - 16" D	SP1582596	SP1582598	SP1582601	SP1582775	N/A
16 - 18" D	SP1582597	SP1582599	SP1582773	SP1582776	SP1582778
20 - 21" D	N/A	SP1582600	SP1582774	SP1582777	SP1582779

Backrest - Attaching Point (AAFD)

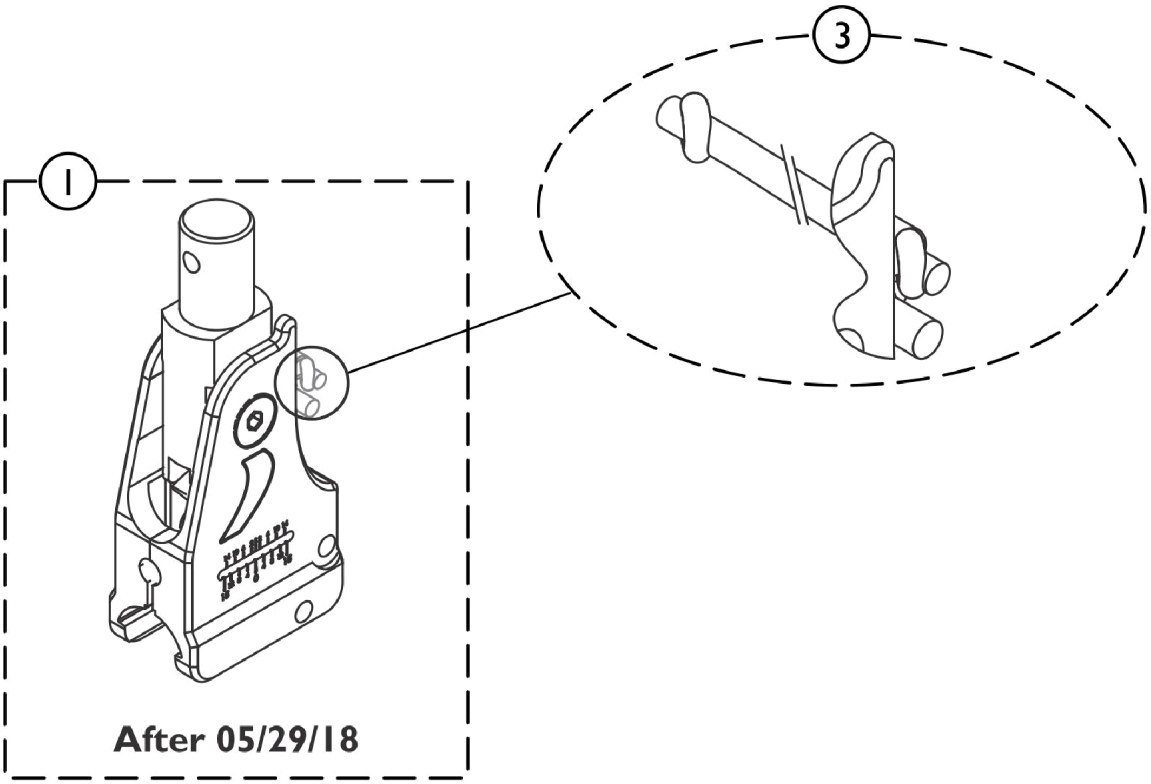

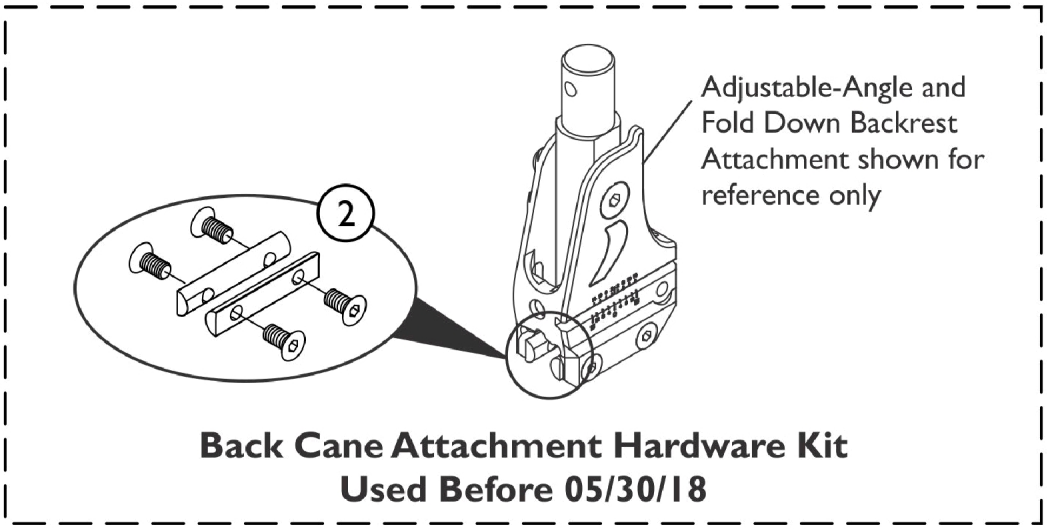

SCM_537A

Backrest - Attaching Point (AAFD)

Item Number	Note	Part Number	Description	Quantity Per	
				Package	Assembly
1		SP1645075	Adjustable Angle and Fold Down Backrest Attachment - Left	1	1
1		SP1645172	Adjustable Angle and Fold Down Backrest Attachment - Right	1	1
2	A	SP1589804	Kit, Hardware, Back Cane Attachment	1	1
3		SP1601900	Cord, Backbrace and Angle or Fold Down Backrest Attachment	1	1

NOTE: A - Item #2 no longer required for Item #1 After 05/29/18.

Backrest - Fixed, Push Handle
(BP4G, B55G, BP55G)

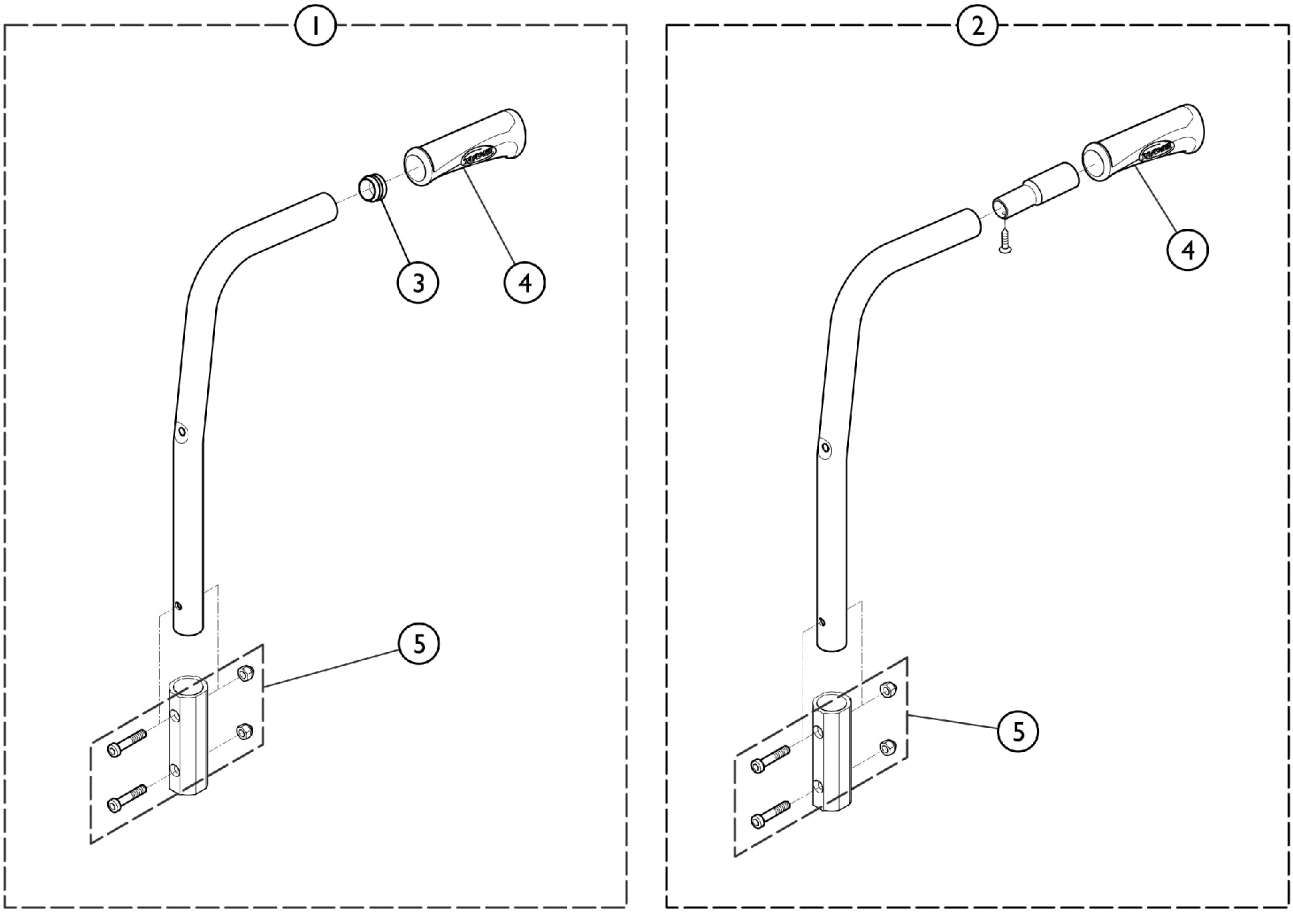

SCM_115A

Backrest - Fixed, Push Handle (BP4G, B55G, BP55G)

Item Number	Note	Part Number	Description	Quantity Per	
				Package	Assembly
1	A	SP1606320	Cane, Back, Fixed w/ Push Handle (12" - ACG1)	1	2
1	A	SP1606321	Cane, Back, Fixed w/ Push Handle (13-14" - ACG1)	1	2
1	A	SP1606322	Cane, Back, Fixed w/ Push Handle (15-16" - ACG1)	1	2
1	A	SP1606323	Cane, Back, Fixed w/ Push Handle (17-18" - ACG1)	1	2
1	A	SP1606324	Cane, Back, Fixed w/ Push Handle (19-20" - ACG1)	1	2
2	B	SP1606326	Cane, Back, Fixed w/ Insert, w/ Push Handle (15-16" - ACG2)	1	2
2	B	SP1606327	Cane, Back, Fixed w/ Insert, w/ Push Handle (17-18" - ACG2)	1	2
2	B	SP1606328	Cane, Back, Fixed w/ Insert, w/ Push Handle (19-20" - ACG2)	1	2
3		SP1418112	Cap, Back Cane (7/8")	1	2
4		SP1435420	Handle, Back Cane (7/8")	1	2
5		SP1589826	Kit, Hardware, Fixed Back Cane	1	2

NOTE: A - Includes items 3, 4, and 5.
B - Includes items 4 and 5.

Backrest - Adjustable, Integrated Push Handle (ABH1416, ABH1619)

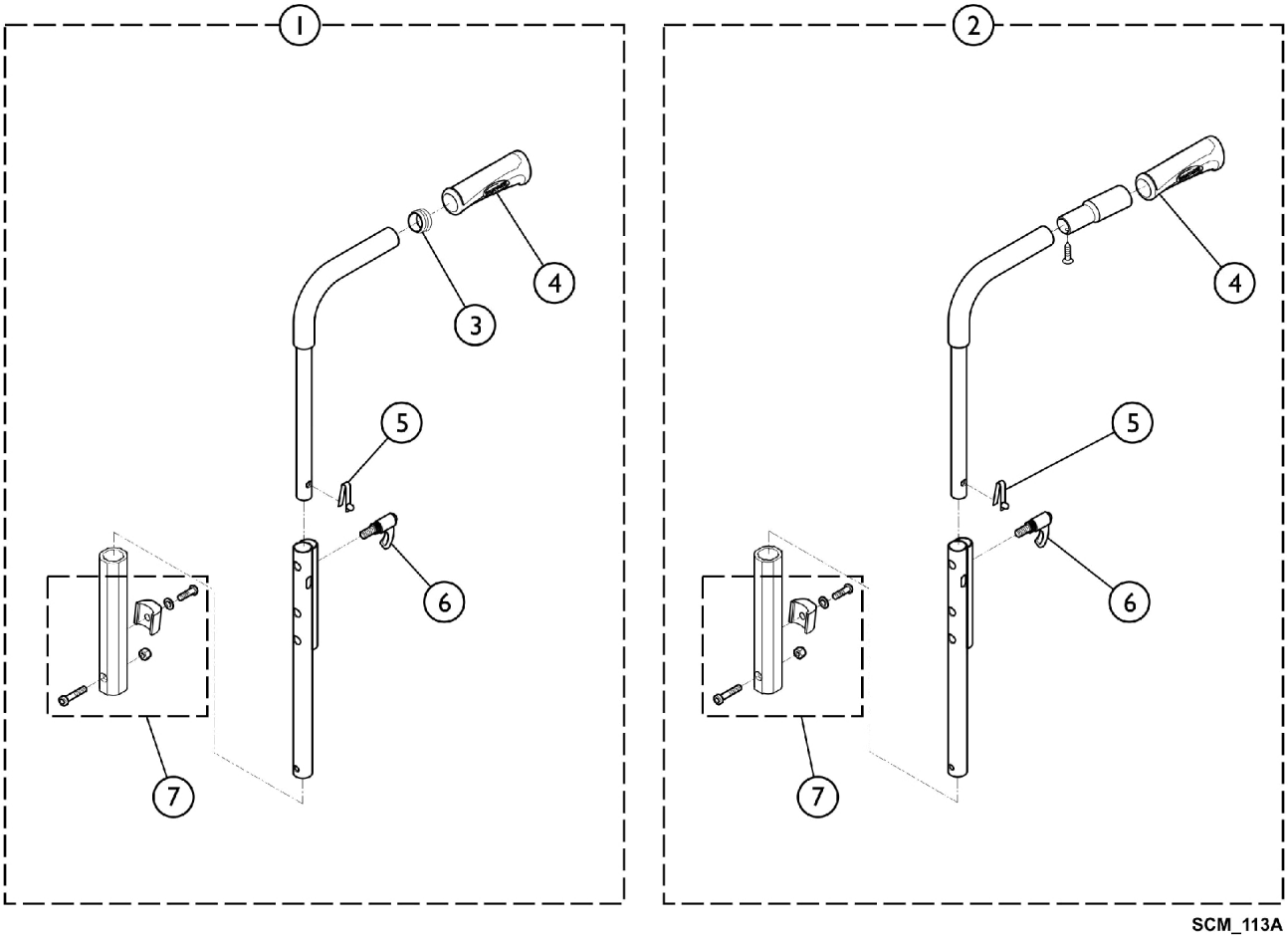

Backrest - Adjustable, Integrated Push Handle (ABH1416, ABH1619)

Item Number	Note	Part Number	Description	Quantity Per	
				Package	Assembly
1	A	SP1584778	Cane, Back, Adjustable Height, Integrated Push Handle (14-16")	1	2
1	A	SP1584779	Cane, Back, Adjustable Height, Integrated Push Handle (16-20")	1	2
2	B	SP1601903	Cane, Back, Adjustable Height w/ Insert, Integrated Push Handle (14-16")	1	2
2	B	SP1601922	Cane, Back, Adjustable Height w/ Insert, Integrated Push Handle (16-20")	1	2
3		SP1418112	Cap, Back Cane (7/8")	1	2
4		SP1425473	Handle, Back Cane (7/8)	1	2
5		SP0027-10003	Spring Pin Locked Armrest	1	2
6		SP1443023	Lever, Indexable (M8 x 25)	1	2
7		SP1589825	Kit, Adjustable Back Cane, Tube Hardware	1	2

NOTE: A - Includes items 3, 4, 5, 6, and 7.
B - Includes items 4, 5, 6, and 7.

Adjustable, Rearset Pushhandle (HNDLADJ57)

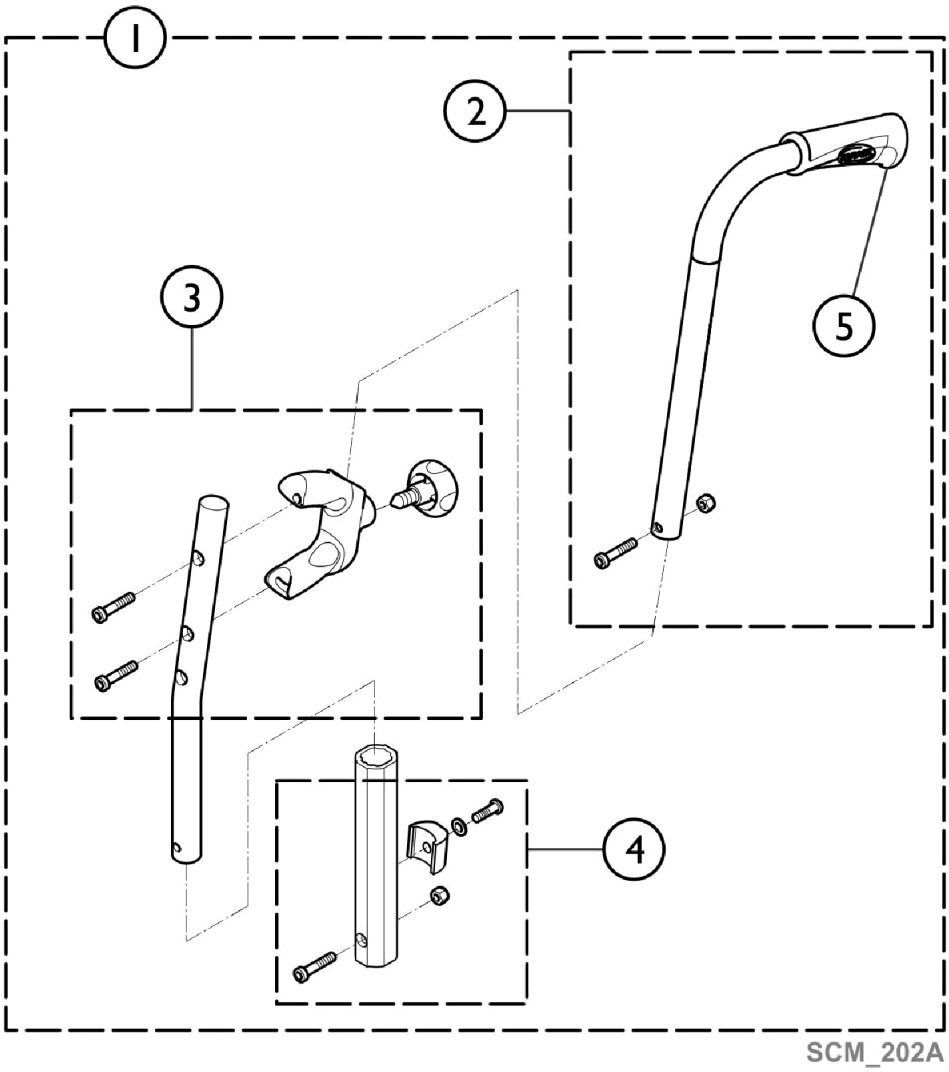

Adjustable, Rearset Pushhandle (HNDLADJ57)

Item Number	Note	Part Number	Description	Quantity Per	
				Package	Assembly
1	A	SP1638470	Cane, Back, Adjustable Height, Rearset Push Handle, Short Tube (14-16")	1	2
1	A	SP1638471	Cane, Back, Adjustable Height, Rearset Push Handle, Short Tube (16-20")	1	2
1	A	SP1584747	Cane, Back, Adjustable Height, Rearset Push Handle, Long Tube (14-16")	1	2
1	A	SP1584764	Cane, Back, Adjustable Height, Rearset Push Handle, Long Tube (16-20")	1	2
2		SP1638472	Kit, Rearset Push Handle Tube, Short	1	2
2		SP1450574	Kit, Rearset Push Handle Tube, Long	1	2
3		SP1451818	Kit, Rearset Push Handle Support	1	2
4		SP1589825	Kit, Adjustable Back Cane, Tube Hardware	1	2
5		SP1435420	Handle, Back Cane (7/8")	1	2

NOTE: A - Includes items 2, 3, 4, and item 5.

Adjustable Height - No Pushhandle (HNDL4ADJ)

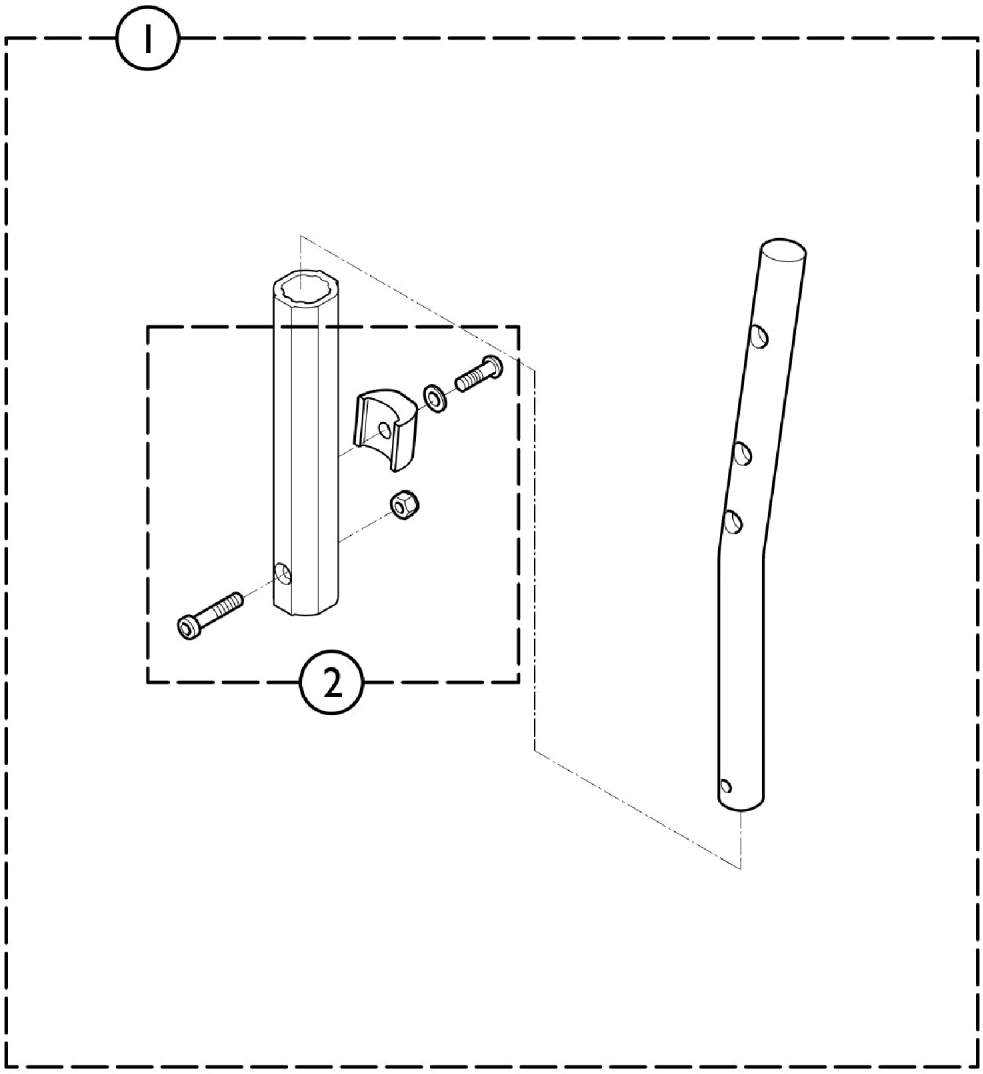

SCM_125A

Item Number	Note	Part Number	Description	Quantity Per	
				Package	Assembly
1	A	SP1584776	Cane, Back, Adjustable Height, w/o Push Handle (14-16")	1	2
1	A	SP1584777	Cane, Back, Adjustable Height, w/o Push Handle (16-20")	1	2
2		SP1589825	Kit, Adjustable Back Cane, Tube Hardware	1	2

NOTE: A - Includes item 2.

Upholstery - Backrest - Fixed and Integrated Push Handle (FXBACKUPH)

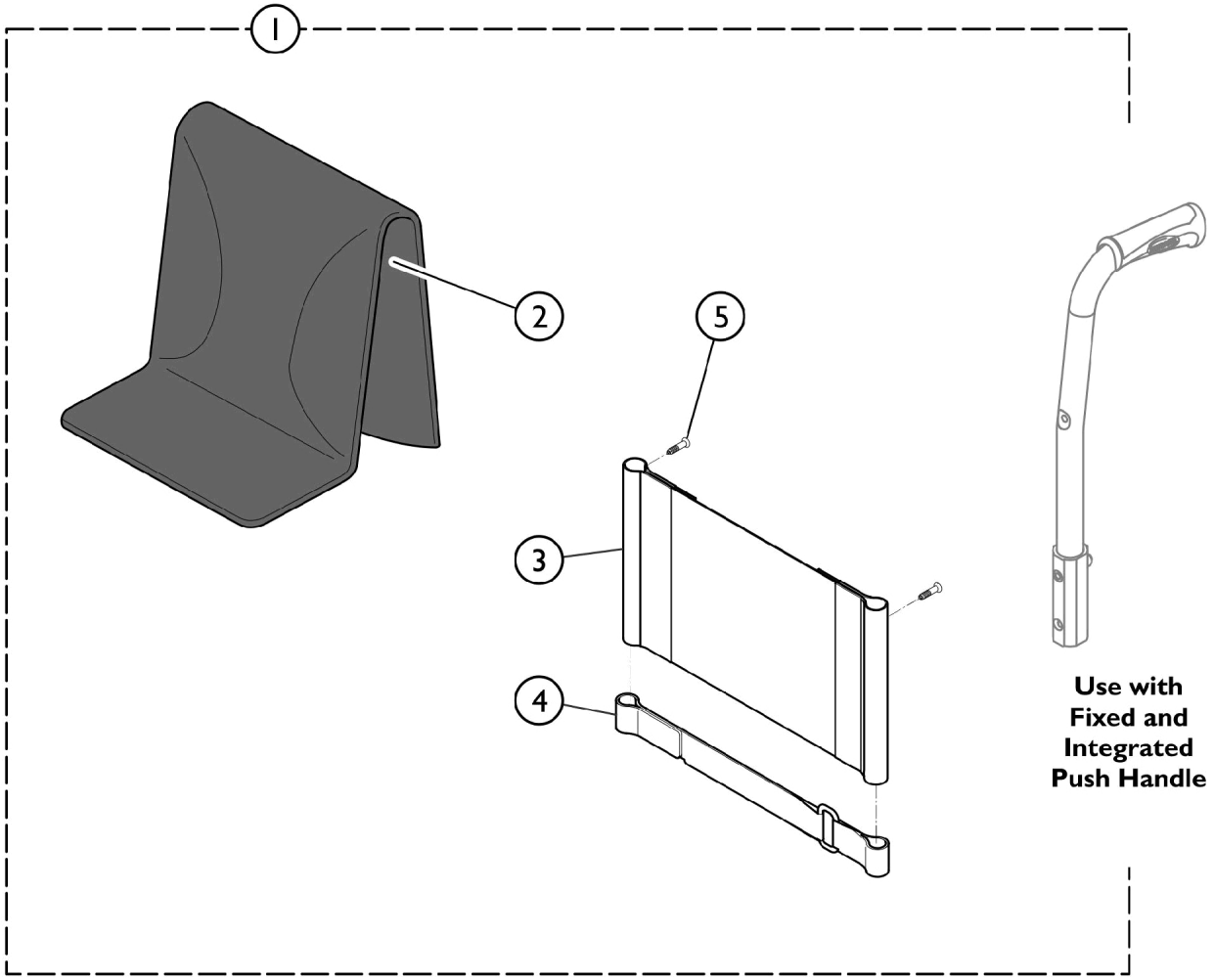

SCM_151A

Item Number	Note	Part Number	Description	Quantity Per	
				Package	Assembly
1	A	See Chart	#1. Upholstery - Back - Complete	1	1
2		See Chart	#2. Upholstery - Back - Outer	1	1
3		See Chart	#3. Fixed Inner Back	1	1
4		SP1601671	Strap, Tension, Adjustment Back Upholstery (19")	1	1
4		SP1601712	Strap, Tension, Adjustment Back Upholstery (24")	1	1
5		SP1428603	Screw Tfb (4,8 x 19 A2r Tx25 DIN7983)	1	2

NOTE: A - Includes items 2 - 5.

Upholstery - Backrest - Fixed and Integrated Push Handle (FXBACKUPH)

#1. Upholstery - Back - Complete

Chair Width	Fixed Low (AGC1)	Fixed High (AGC3)
12" W	SP1584647	SP1588315
13" W	SP1584648	SP1588316
14" W	SP1584649	SP1588317
15" W	SP1584650	SP1588318
16" W	SP1584651	SP1588339
17" W	SP1584652	SP1588340
18" W	SP1584653	SP1588341
19" W	SP1584654	SP1588412
20" W	SP1584655	SP1588428
21" W	SP1584656	SP1588429

#2. Upholstery - Back - Outer

Chair Width	Outer Short (12 - 14" Back Height)	Outer Standard (16 - 18" Back Height)
12" W	SP1586150	SP1586070
13" W	SP1586151	SP1586071
14" W	SP1586169	SP1586072
15" W	SP1586170	SP1586073
16" W	SP1586171	SP1586074
17" W	SP1586185	SP1586075
18" W	SP1586186	SP1586076
19" W	SP1586187	SP1586077
20" W	SP1586188	SP1586148
21" W	SP1586189	SP1586149

Upholstery - Backrest - Fixed and Integrated Push Handle (FXBACKUPH)

#3. Fixed Inner Back

Chair Width	17" High
12" W	SP1584892
13" W	SP1584893
14" W	SP1584894
15" W	SP1532247
16" W	SP1532248
17" W	SP1532249
18" W	SP1532250
19" W	SP1532251
20" W	SP1532252
21" W	SP1533168

Upholstery - Backrest - Adjustable - w/o Integrated and Rearset Push Handle (ADJBACKUPH)

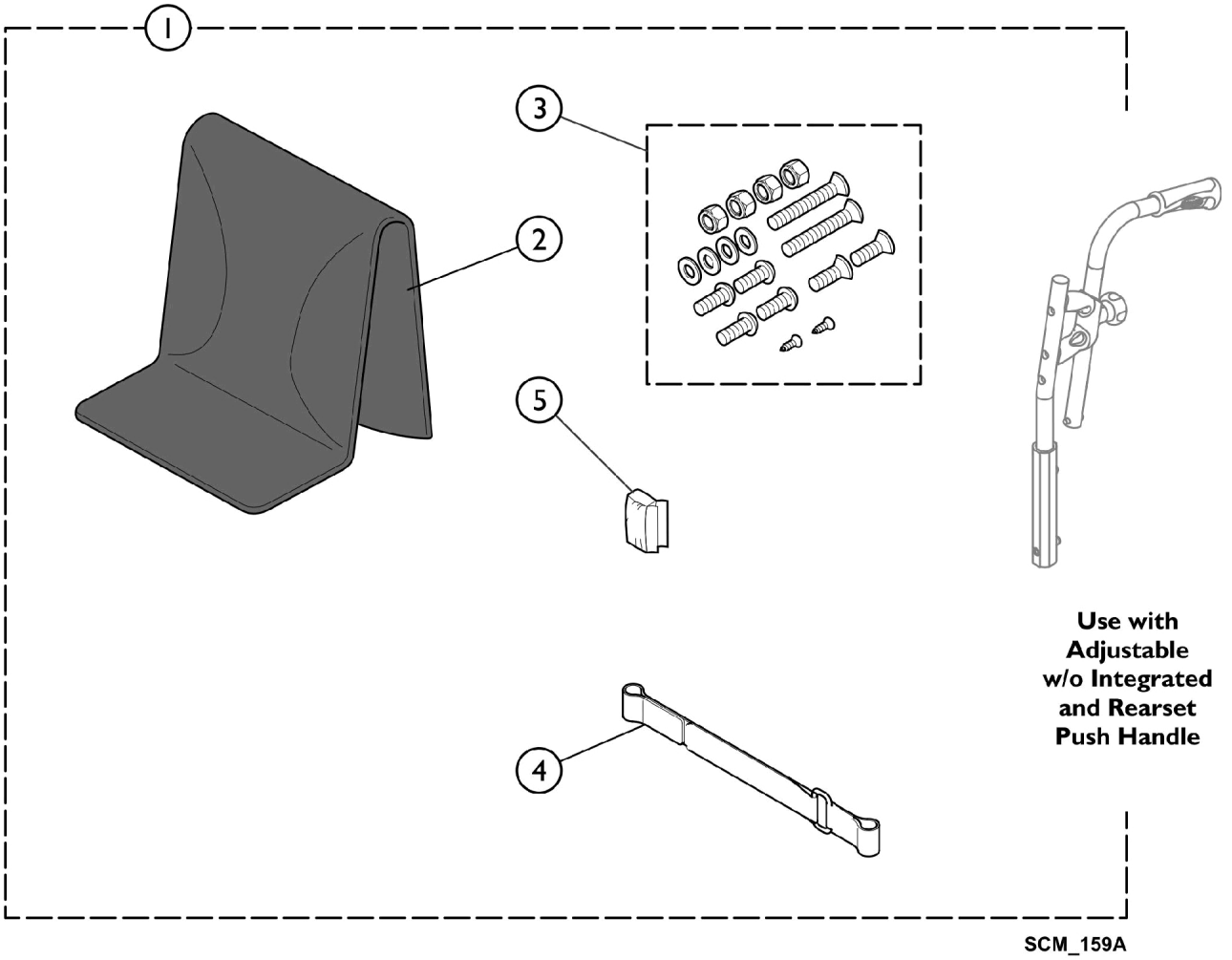

Item Number	Note	Part Number	Description	Quantity Per	
				Package	Assembly
1	A	See Chart	#1. Upholstery - Back - Complete	1	1
2		See Chart	#2. Outer Back Cover	1	1
3		SP1601667	Kit, Hardware, Adjustable Back Cane Upholstery	1	1
4		SP1601671	Strap, Tension, Adjustment Back Upholstery (19")	1	1
4		SP1601712	Strap, Tension, Adjustment Back Upholstery (24")	1	1
5		SP1601713	Kit, Protection, Back Cane w/o Push Handle	1	1

NOTE: A - Includes items 2, 3, 4, and item 5.

Upholstery - Backrest - Adjustable - w/o Integrated and Rearset Push Handle (ADJBACKUPH)

#1. Upholstery - Back - Complete

Chair Width	14 - 16" D	16 - 20" D
12" W	SP1589223	SP1589455
13" W	SP1589224	SP1589456
14" W	SP1589327	SP1589457
15" W	SP1589396	SP1589458
16" W	SP1589397	SP1589459
17" W	SP1589398	SP1589460
18" W	SP1589399	SP1589461
19" W	SP1589400	SP1589466
20" W	SP1589401	SP1589467
21" W	SP1589402	SP1589468

#2. Outer Back Cover

Chair Width	Outer Back Short (12 - 14" Back Height)	Outer Back Standard (16 - 18" Back Height)
12" W	SP1586150	SP1586070
13" W	SP1586151	SP1586071
14" W	SP1586169	SP1586072
15" W	SP1586170	SP1586073
16" W	SP1586171	SP1586074
17" W	SP1586185	SP1586075
18" W	SP1586186	SP1586076
19" W	SP1586187	SP1586077
20" W	SP1586188	SP1586148
21" W	SP1586189	SP1586149

Upholstery - Backrest - Adjustable - Telescoping Back Cane (FXBACKUPH)

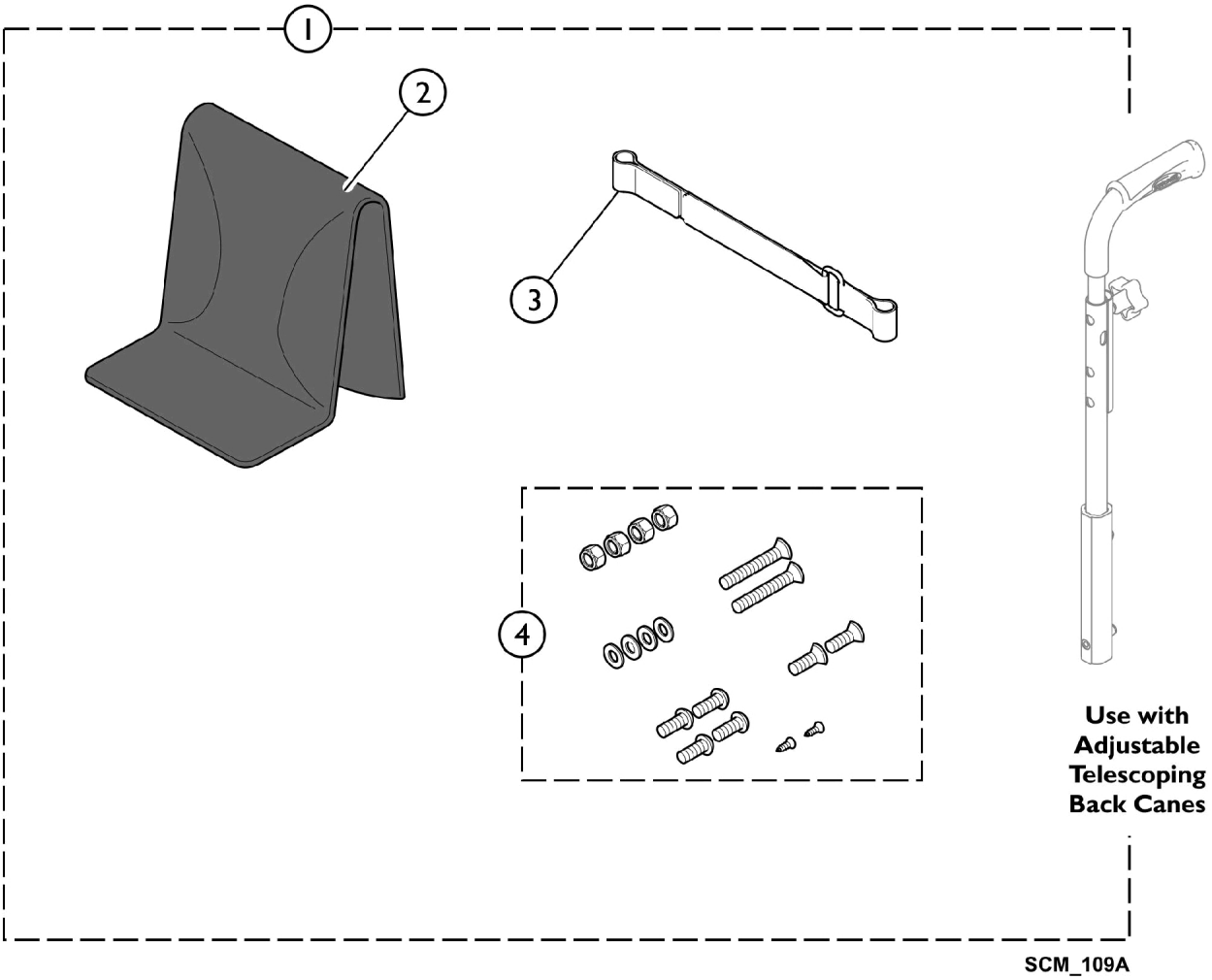

Item Number	Note	Part Number	Description	Quantity Per	
				Package	Assembly
1	A	See Chart	#1. Upholstery - Back - Complete	1	1
2		See Chart	#2. Outer Back Cover	1	1
3		SP1601667	Kit, Hardware, Adjustable Back Cane Upholstery	1	1
4		SP1601671	Strap, Tension, Adjustment Back Upholstery (19")	1	1
4		SP1601712	Strap, Tension, Adjustment Back Upholstery (24")	1	1

NOTE: A - Includes items 2, 3, and 4.

Upholstery - Backrest - Adjustable - Telescoping Back Cane (FXBACKUPH)

#1. Upholstery - Back - Complete

Chair Width	Adjustable Low (AGC1)	Adjustable High (ACG3)
12" W	SP1589403	SP1589423
13" W	SP1589404	SP1589446
14" W	SP1589405	SP1589447
15" W	SP1589406	SP1589448
16" W	SP1589407	SP1589449
17" W	SP1589408	SP1589450
18" W	SP1589409	SP1589451-NLA
19" W	SP1589410	SP1589452
20" W	SP1589411	SP1589453
21" W	SP1589412	SP1589454

#2. Outer Back Cover

Chair Width	Outer Back Short (12 - 14" Back Height)	Outer Back Standard (16 - 18" Back Height)
12" W	SP1586150	SP1586070
13" W	SP1586151	SP1586071
14" W	SP1586169	SP1586072
15" W	SP1586170	SP1586073
16" W	SP1586171	SP1586074
17" W	SP1586185	SP1586075
18" W	SP1586186	SP1586076
19" W	SP1586187	SP1586077
20" W	SP1586188	SP1586148
21" W	SP1586189	SP1586149

Upholstery - Backrest - Adjustable - Fixed and Integrated Push Handle (ADJBACKUPH)

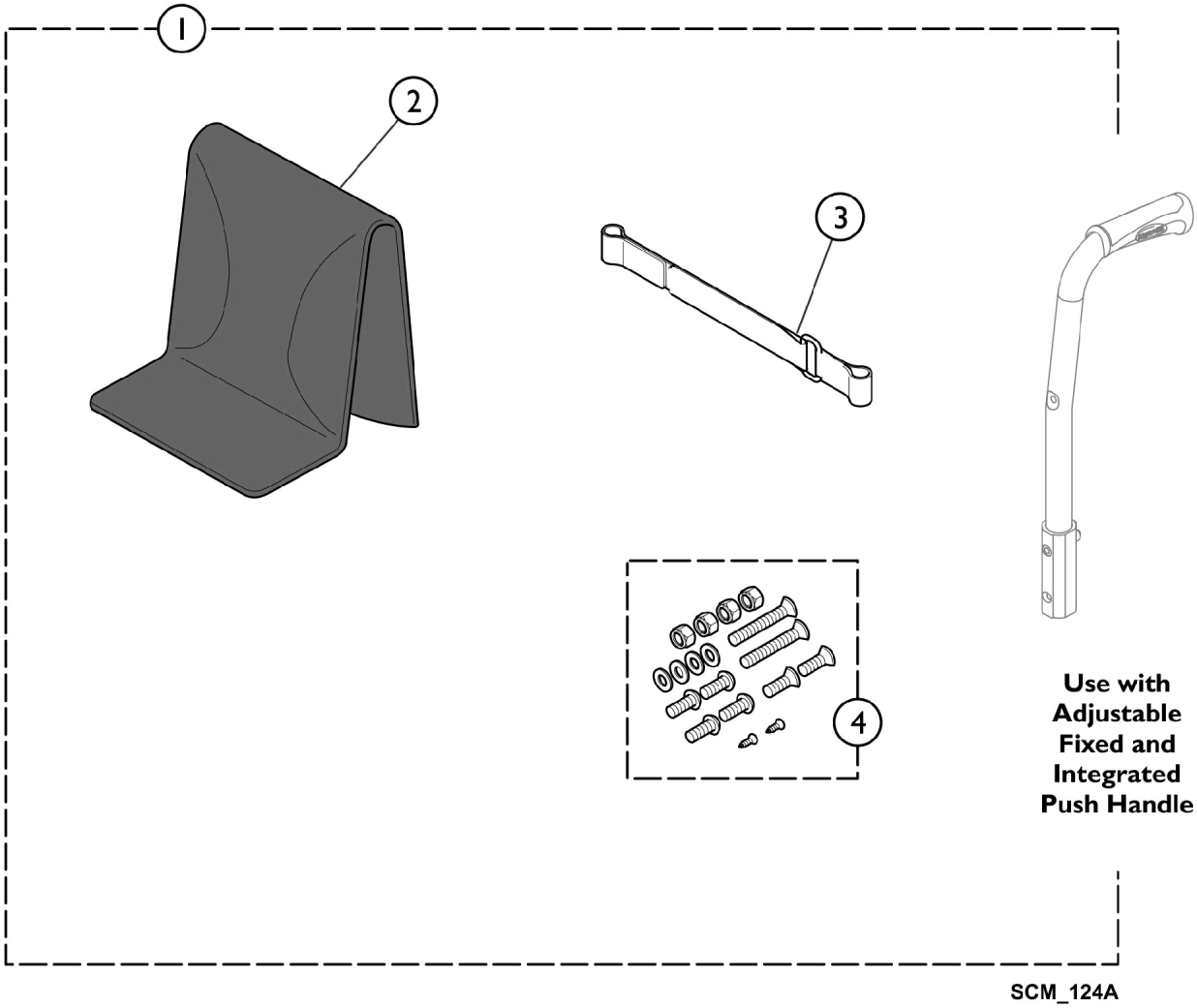

Item Number	Note	Part Number	Description	Quantity Per	
				Package	Assembly
1	A	See Chart	#1. Upholstery Assembly - Back Complete	1	1
2		See Chart	#2. Outer Back Cover	1	1
3		SP1601712	Strap, Tension, Adjustment Back Upholstery (24")	1	1
3		SP1601671	Strap, Tension, Adjustment Back Upholstery (19")	1	1
4		SP1601667	Kit, Hardware, Adjustable Back Cane Upholstery	1	1

NOTE: A - Includes items 2, 3, and 4.

Upholstery - Backrest - Adjustable - Fixed and Integrated Push Handle (ADJBACKUPH)

#1. Upholstery Assembly - Back Complete

Chair Width	Low Adjustable (ACG1)	Medium Adjustable (AGC2)	High Adjustable (AGC3)
12" W	SP1589213	SP1602207	SP1589413
13" W	SP1589214	SP1602208	SP1589414
14" W	SP1589215	SP1602209	SP1589415
15" W	SP1589216	SP1602210	SP1589416
16" W	SP1589217	SP1602211	SP1589417
17" W	SP1589218	SP1602212	SP1589418
18" W	SP1589219	SP1602213	SP1589419
19" W	SP1589220	SP1602214	SP1589420
20" W	SP1589221	SP1602215	SP1589421
21" W	SP1589222	SP1602216	SP1589422

#2. Outer Back Cover

Chair Width	Outer Back Short (12 - 14" Back Height)	Outer Back Standard (16 - 18" Back Height)
12" W	SP1586150	SP1586070
13" W	SP1586151	SP1586071
14" W	SP1586169	SP1586072
15" W	SP1586170	SP1586073
16" W	SP1586171	SP1586074
17" W	SP1586185	SP1586075
18" W	SP1586186	SP1586076
19" W	SP1586187	SP1586077
20" W	SP1586188	SP1586148
21" W	SP1586189	SP1586149

Front Riggings - 70 Degree Hanger (70SA)

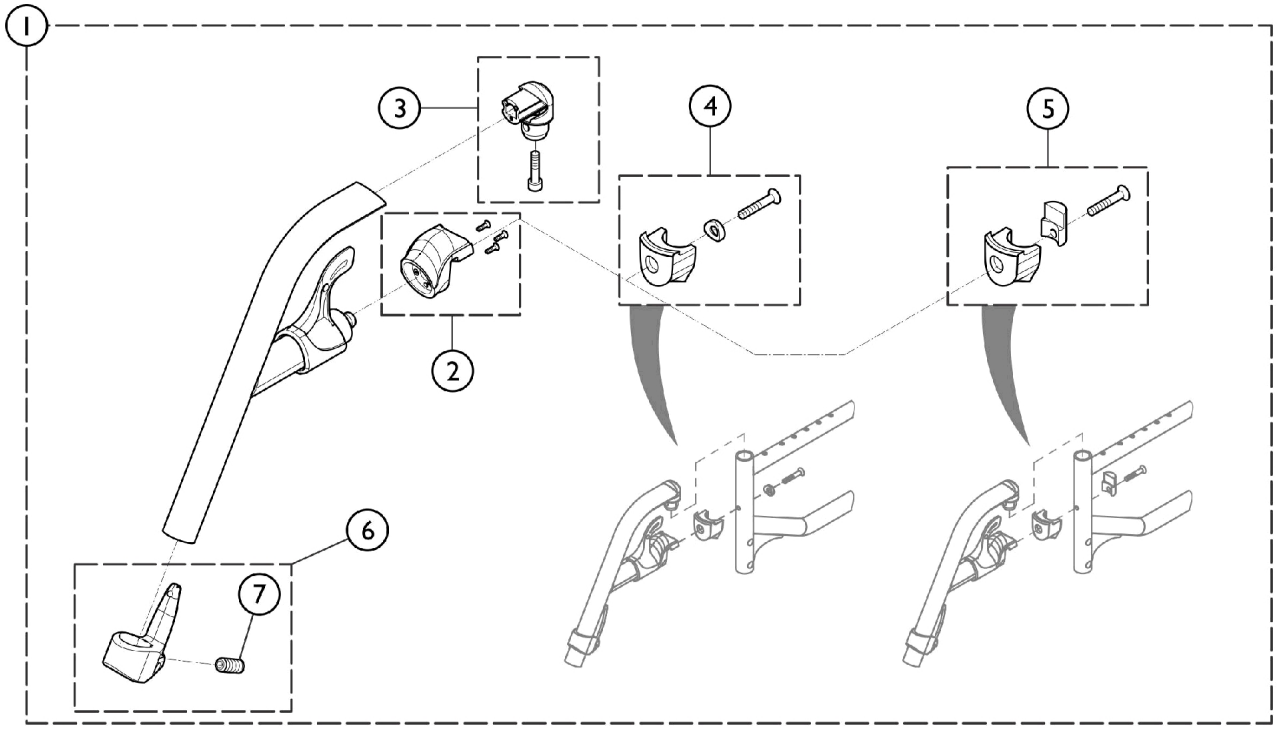

SCM_129B

Item Number	Note	Part Number	Description	Quantity Per	
				Package	Assembly
1	A	See Chart	#1. 70 Degree Hanger - Complete	1	2
2		SP1584383	Kit, Hanger Locking Nose	1	2
3		SP1584381	Kit, Hanger Pivot	1	2
4		SP1584380	Kit, Hanger Locked	1	2
5		SP1587483	Kit, Hanger Stopper	1	2
6		SP1584382	Calf Strap Holder and Ball Screw	1	2
7		SP1424571	Screw, Stop (M10 x 23)	1	2

NOTE: A - Includes items 2, 3, 4, 5, 6, and 7.

#1. 70 Degree Hanger - Complete

Color	Part Number	Color	Part Number
Pearl White	SP1584371-0637	Hypnotic Purple	SP1584371-0645
Anthracite Black	SP1584371-0609	Pearl Grey	SP1584371-0515
Pop Blue	SP1584371-0643	Matte Black	SP1584371-0646
Deep Red	SP1584371-0607	Intense Yellow	SP1584371-0647
Extreme Green	SP1584371-0644	Vibrant Orange	SP1584371-0648

Front Riggings - 80 Degree Hanger (80SA)

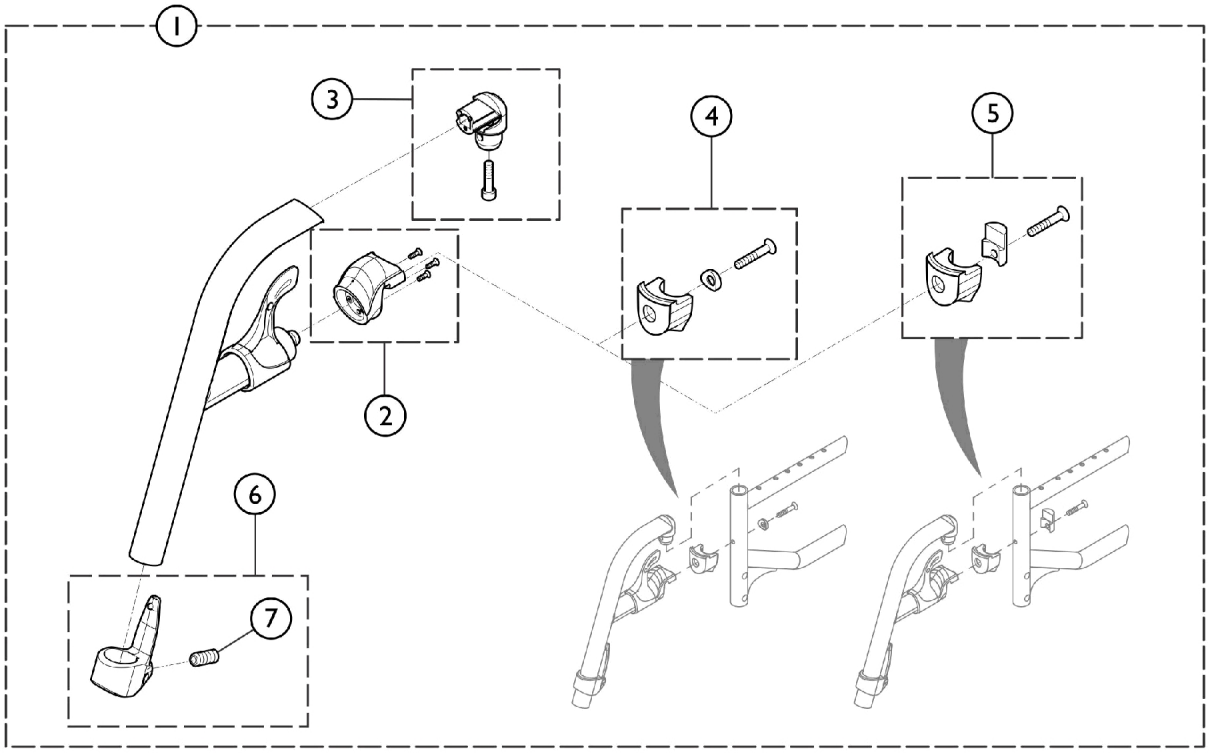

SCM_108A

Item Number	Note	Part Number	Description	Quantity Per	
				Package	Assembly
1	A	See Chart	#1. 80 Degree Hanger - Complete	1	2
2		SP1584383	Kit, Hanger Locking Nose	1	2
3		SP1584381	Kit, Hanger Pivot	1	2
4		SP1584380	Kit, Hanger Locked	1	2
5		SP1587483	Kit, Hanger Stopper	1	2
6		SP1584382	Calf Strap Holder and Ball Screw	1	2
7		SP1424571	Screw, Stop (M10 x 23)	1	2

NOTE: A - Includes items 2, 3, 4, 5, 6, and 7.

#1. 80 Degree Hanger - Complete

Color	Part Number	Color	Part Number
Pearl White	SP1584369-0637	Hypnotic Purple	SP1584369-0645
Anthracite Black	SP1584369-0609	Pearl Grey	SP1584369-0515
Pop Blue	SP1584369-0643	Matte Black	SP1584369-0646
Deep Red	SP1584369-0607	Intense Yellow	SP1584369-0647
Extreme Green	SP1584369-0644	Vibrant Orange	SP1584369-0648

Front Riggings - 90 Degree Hanger (90SA)

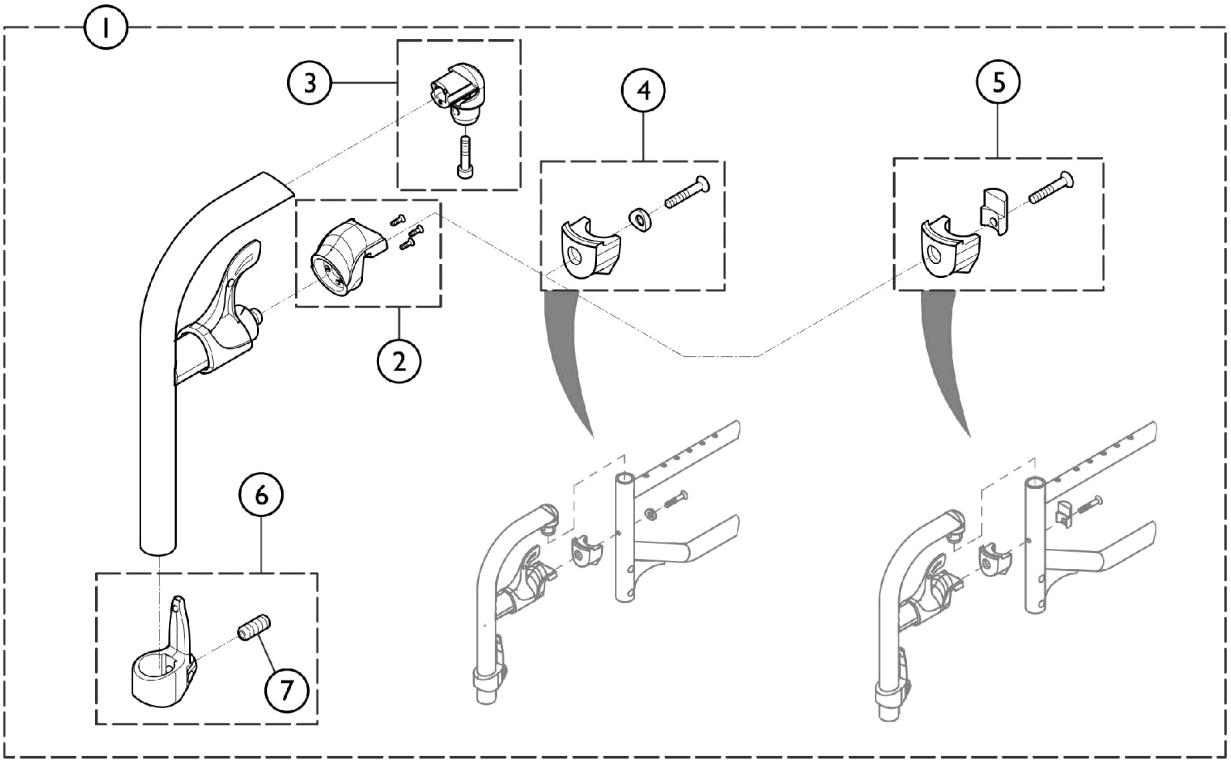

SCM_131B

Item Number	Note	Part Number	Description	Quantity Per	
				Package	Assembly
1	A	See Chart	#1. 90 Degree Hanger	1	2
2		SP1584383	Kit, Hanger Locking Nose	1	2
3		SP1584381	Kit, Hanger Pivot	1	2
4		SP1584380	Kit, Hanger Locked	1	2
5		SP1587483	Kit, Hanger Stopper	1	2
6		SP1584382	Calf Strap Holder and Ball Screw	1	2
7		SP1424571	Screw, Stop (M10 x 23)	1	2

NOTE: A - Includes items 2, 3, 4, 5, 6, and 7.

#1. 90 Degree Hanger

Color	Part Number	Color	Part Number
Pearl White	SP1584370-0637	Hypnotic Purple	SP1584370-0645
Anthracite Black	SP1584370-0609	Pearl Grey	SP1584370-0515
Pop Blue	SP1584370-0643	Matte Black	SP1584370-0646
Deep Red	SP1584370-0607	Intense Yellow	SP1584370-0647
Extreme Green	SP1584370-0644	Vibrant Orange	SP1584370-0648

Front Riggings - Elevating Legrest (HPELVSWING)

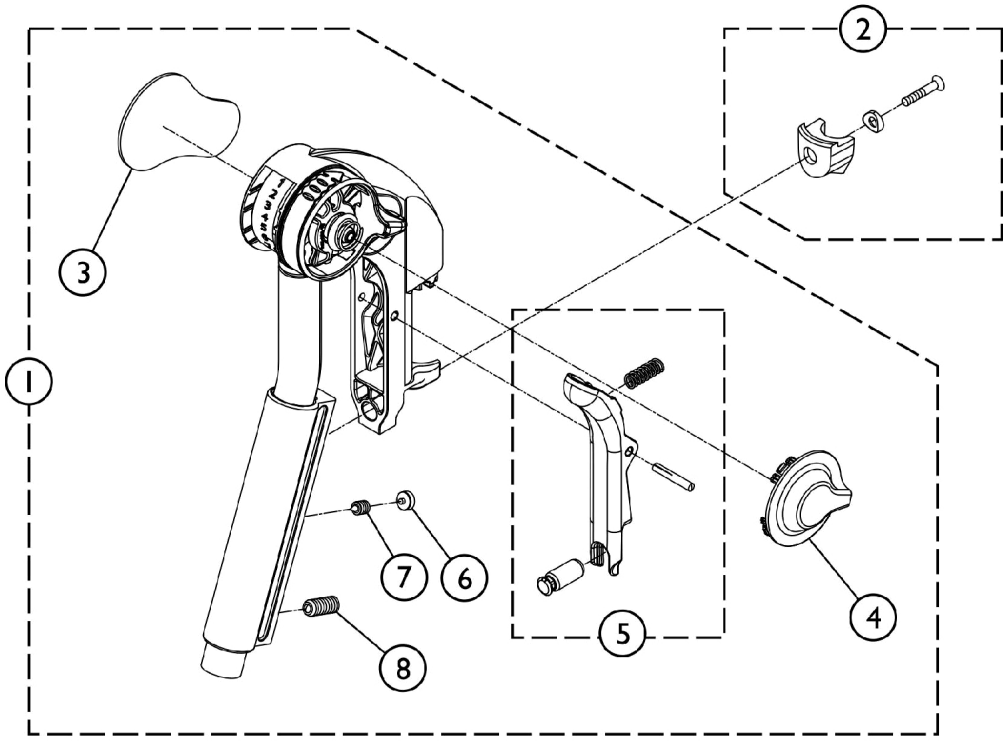

SCM_123A

Item Number	Note	Part Number	Description	Quantity Per	
				Package	Assembly
1	A	SP1552881-NLA	NLA - Elevating Legrest w/ Hardware - Left	1	1
1	A	SP1552882-NLA	NLA - Elevating Legrest w/ Hardware - Right	1	1
2		SP1584380	Kit, Hanger Locked	1	1
3		SP1428336	Kneepad	1	1
4		SP1508943	Lever, Incline Adjustment	1	1
5		SP1430429	Kit, Legrest Trigger	1	1
6		SP1435741	Plug, Footrest Hanger	1	1
7		SP1424572	Screw, Stop (M10 x 12r)	1	1
8		SP1424571	Screw, Stop (M10 x 23)	1	1

NOTE: A - Includes items 2, 3, 4, 5, 6, 7, and 8.

Front Riggings - Calf Pad (HPELVSWING)

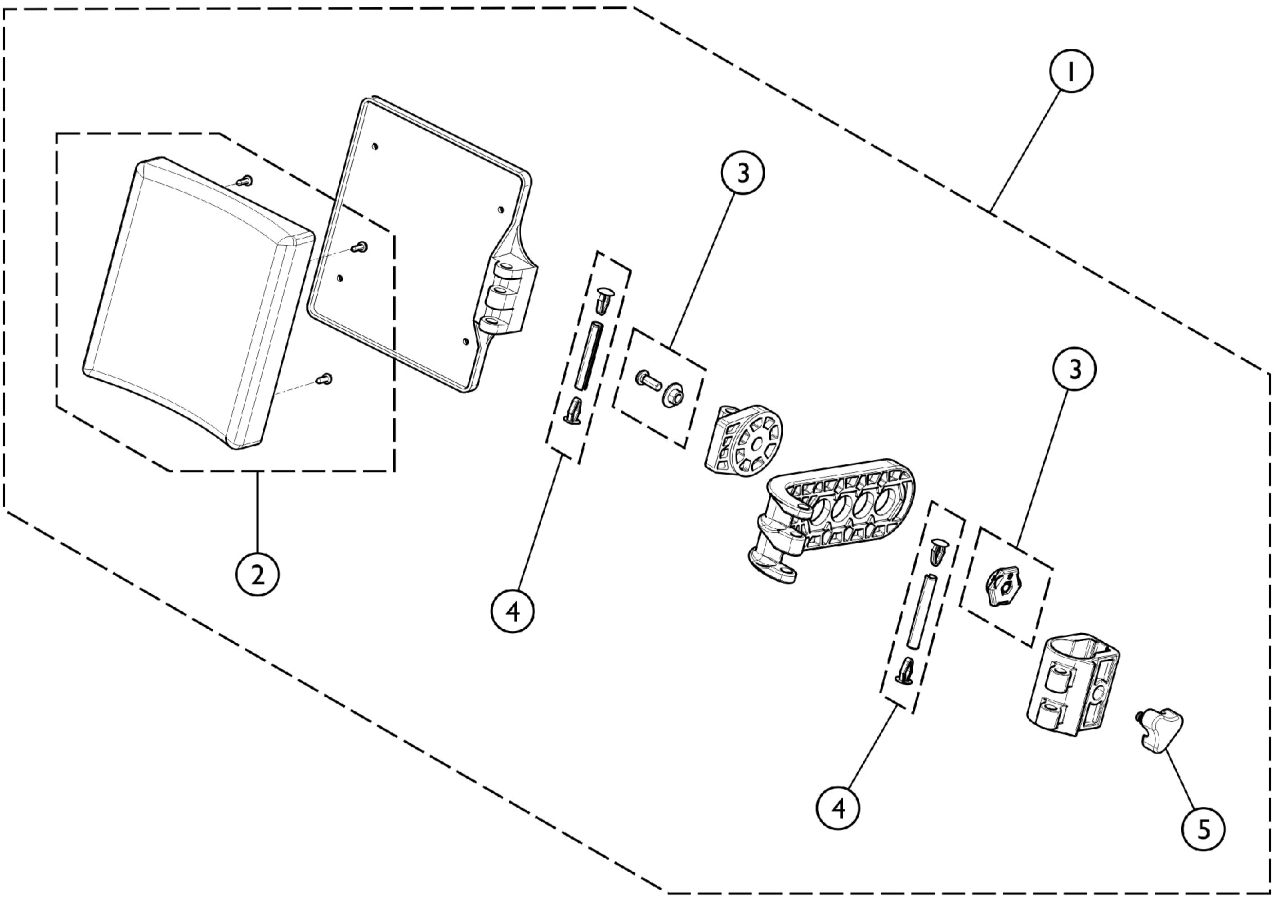

SCM_116A

Item Number	Note	Part Number	Description	Quantity Per	
				Package	Assembly
1	A	SP1450932	Complete Polyurethane Calf Pad (Cushion w/ Support), (15-17" W)	1	1
1	A	SP1450933	Complete Polyurethane Calf Pad (Cushion w/ Support), (18-20" W)	1	1
2		SP1430430	Polyurethane Calf Pad Cushion w/ Hardware (15-17" W)	1	1
2		SP1430431	Polyurethane Calf Pad Cushion w/ Hardware (18-20" W)	1	1
3		SP1440132	Kit, Hardware, Angle Adjustable Calf Pad	1	1
4		SP1430432	Kit, Articulation Pin Calf Pad	1	1
5		SP1440943	Knob, Locking Star	1	1

NOTE: A - Includes items 2, 3, 4, and 5.

Front Riggings - Amputee Legrest (AMPSPTP)

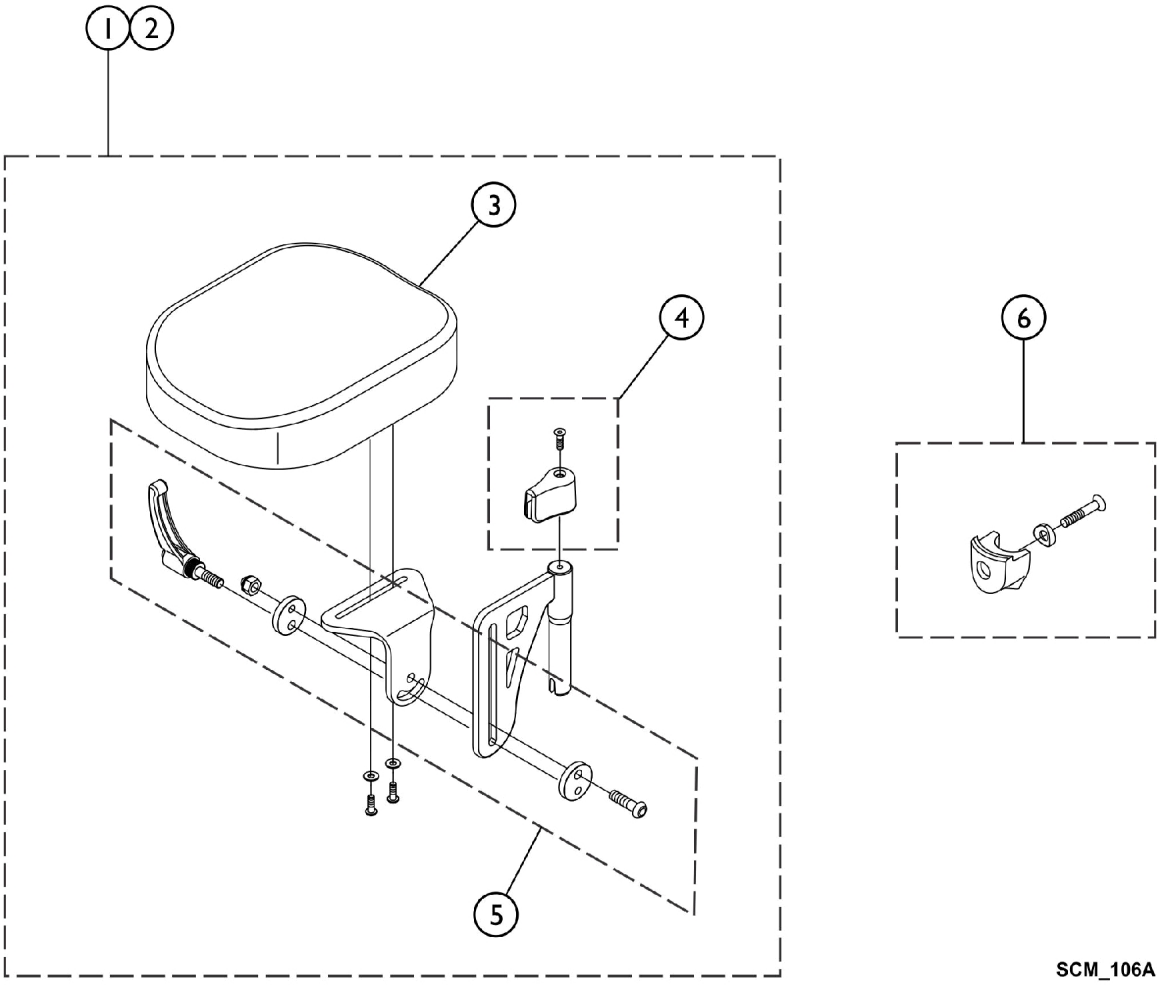

Item Number	Note	Part Number	Description	Quantity Per	
				Package	Assembly
1	A	SP1442991	Amputee, Legrest Support - Left	1	1
2	A	SP1442990	Amputee, Legrest Support - Right	1	1
3		SP1497450	Cushion, Amputee Legrest (9-13/16" L x 7-1/16" W)	1	1
4		SP1446556	Stop, Amputee Legrest w/ Hardware	1	1
5		SP1446557	Slide, Amputee Legrest w/ Hardware	1	1
6		SP1584380	Kit, Hanger Locked	1	1

NOTE: A - Includes items 3, 4, 5, and 6.

Footrest - Fixed - Swing Away Frame (SAS, COMPFU)

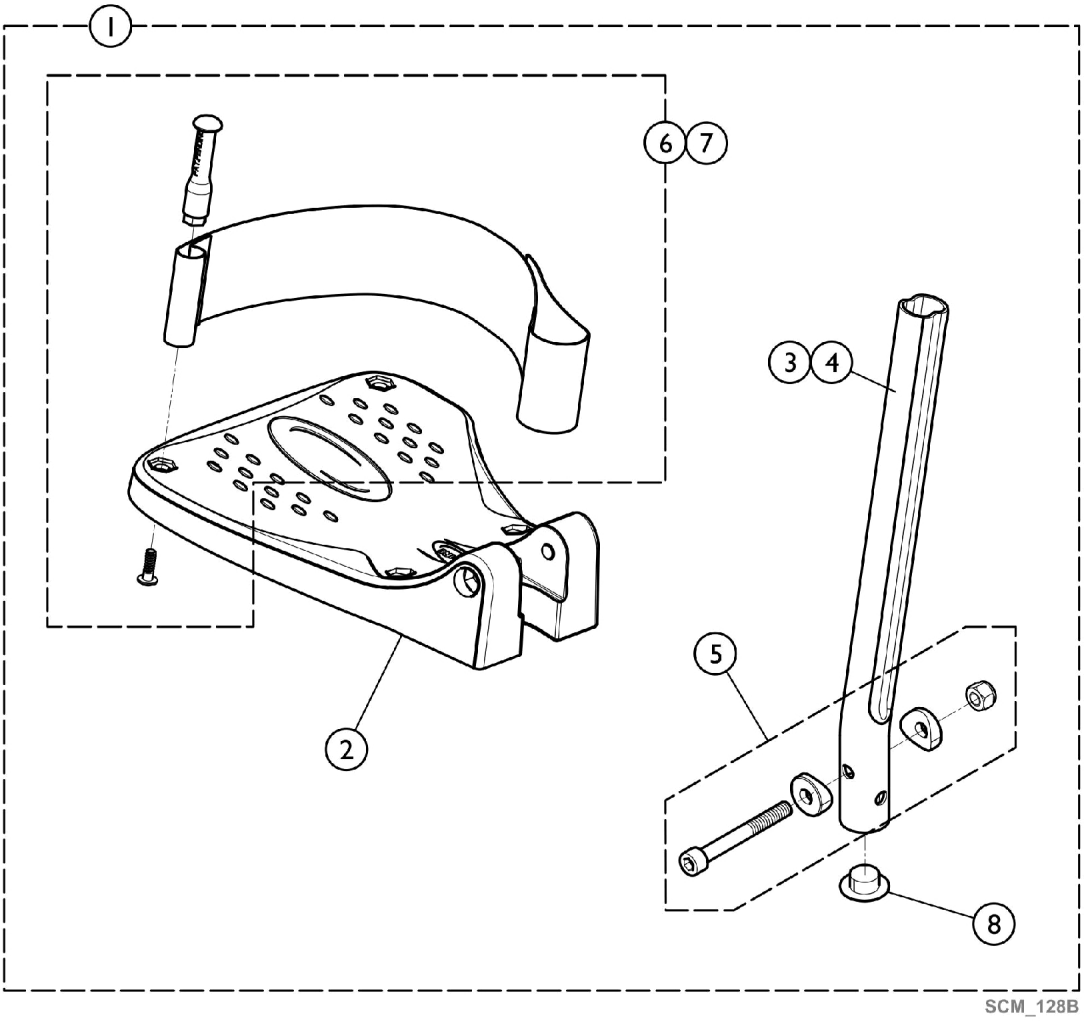

Item Number	Note	Part Number	Description	Quantity Per	
				Package	Assembly
1	A	See Chart	#1. Footrest - Complete	1	1
2		See Chart	#2. Footplate	1	1
3		SP1434561-0010	Standard Tube for Fixed Footrest	1	1
4		SP1434563-0010	Long Tube for Fixed and Adjustable Footrest	1	1
5		SP1430433	Kit, Screws, Fixed Footrest	1	1
6		SP0587-05201	Kit, Heel Strap, Adjustable, Small	1	1
7		SP1492315	Kit, Heel Strap, Adjustable, Medium	1	1
8		SP1424576	Plastic Cap Black (7/8")	1	1

NOTE: A - Includes items 2, 3, 4, 5, 6, 7, and item 8.

Footrest - Fixed - Swing Away Frame (SAS, COMPFU)

#1. Footrest - Complete

Chair Width	Option	Left Footrest	Right Footrest
12" W Standard Tube	SASTD	SP1586899	SP1586900
12" W Long Tube	SAL	SP1587273	SP1587274
13" W Standard Tube	SASTD	SP1586901	SP1587031
13" W Long Tube	SAL	SP1587275	SP1587312
14" W Standard Tube	SASTD	SP1587179	SP1587215
14" W Long Tube	SAL	SP1587313	SP1587405
15 - 16" W Standard Tube	SASTD	SP1530620	SP1530614
15 - 16" W Long Tube	SAL	SP1530633	SP1530630
17 - 18" W Standard Tube	SASTD	SP1530622	SP1530616
17 - 18" W Long Tube	SAL	SP1530634	SP1530631
19 - 20" W Standard Tube	SASTD	SP1530623	SP1530617
19 - 20" W Long Tube	SAL	SP1530635	SP1530632
21" W Standard Tube	SASTD	SP1601715	SP1601716
21" W Long Tube	SAL	SP1601762	SP1601763

Footrest - Fixed - Swing Away Frame (SAS, COMPFU)

#2. Footplate

Footplate Size	Chair Width	Left Footplate	Right Footplate
5-1/4"	12 - 13" W	SP0572-04433	SP0572-04447
6-1/2"	14" W	SP0572-04434	SP0572-04448
6-3/4"	15 - 16" W	SP1529643	SP1529642
8"	17 - 18" W	SP1529645	SP1529644
9"	19 - 21" W	SP1529647	SP1529646

Footrest - Fixed Frame (FXSTD, FXL, COMPFU)

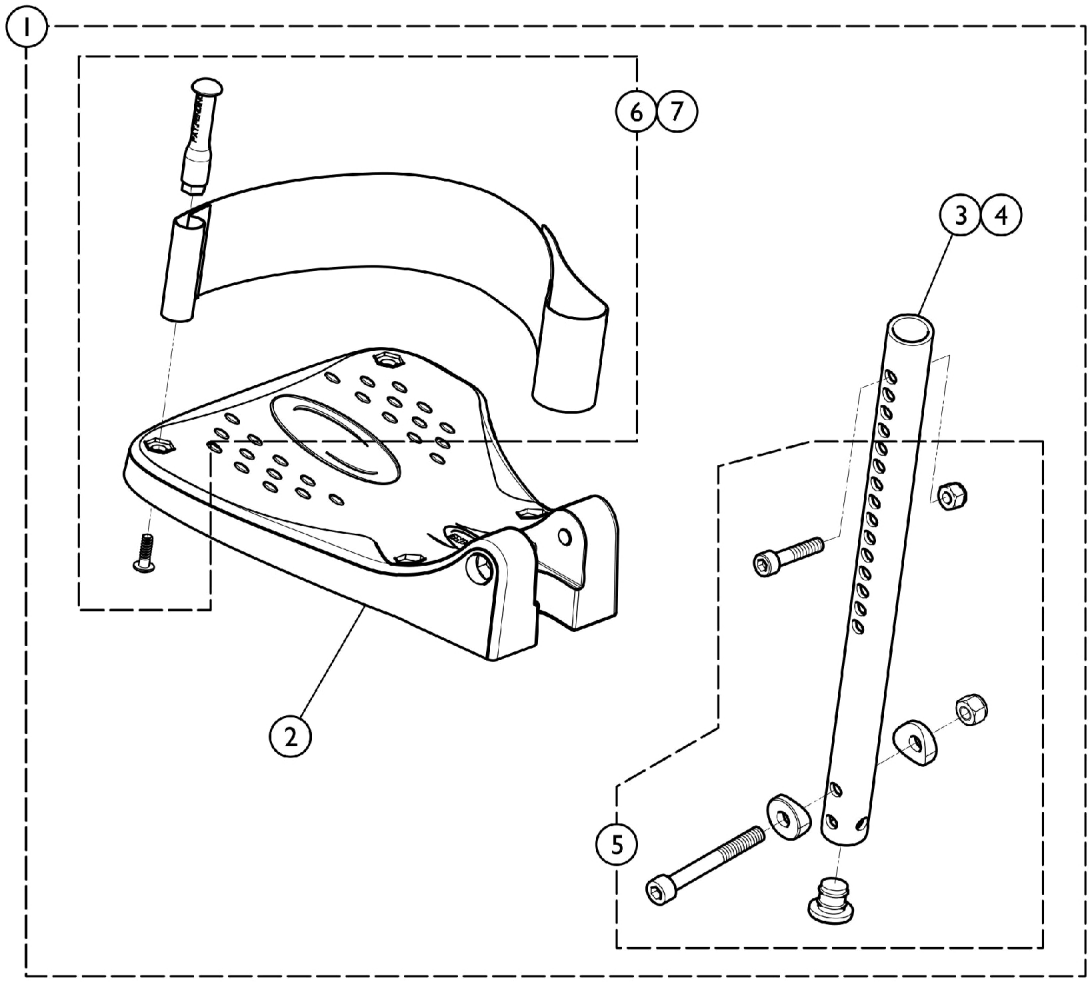

SCM_126B

Item Number	Note	Part Number	Description	Quantity Per	
				Package	Assembly
1	A	See Chart	#1. Footrest - Complete	1	1
2		See Chart	#2. Footplate	1	1
3		SP1511849-0010	Footrest Tube, Standard Straight, Fixed Frame	1	1
4		SP1506244-0699	Footrest Tube, Long Straight, Fixed Frame	1	1
5		SP1434612	Kit, Hardware, Footrest Tube	1	1
6		SP0587-05201	Kit, Heel Strap, Adjustable, Small	1	1
7		SP1492315	Kit, Heel Strap, Adjustable, Medium	1	1

NOTE: A - Includes items 2, 3, 4, 5, 6, and item 7.

Footrest - Fixed Frame (FXSTD, FXL, COMPFU)

#1. Footrest - Complete

Chair Width	Option	Left Footrest	Right Footrest
12" W Standard Tube	FXSTD	SP1586899	SP1586900
12" W Long Tube	FXL	SP1587273	SP1587274
13" W Standard Tube	FXSTD	SP1586901	SP1587031
13" W Long Tube	FXL	SP1587275	SP1587312
14" W Standard Tube	FXSTD	SP1587179	SP1587215
14" W Long Tube	FXL	SP1587313	SP1587405
15 - 16" W Standard Tube	FXSTD	SP1530620	SP1530614
15 - 16" W Long Tube	FXL	SP1530633	SP1530630
17 - 18" W Standard Tube	FXSTD	SP1530622	SP1530616
17 - 18" W Long Tube	FXL	SP1530634	SP1530631
19 - 20" W Standard Tube	FXSTD	SP1530623	SP1530617
19 - 20" W Long Tube	FXL	SP1530635	SP1530632
21" W Standard Tube	FXSTD	SP1601715	SP1601716
21" W Long Tube	FXL	SP1601762	SP1601763

Footrest - Fixed Frame (FXSTD, FXL, COMPFU)

#2. Footplate

Footplate Size	Chair Width	Left Footplate	Right Footplate
5-1/4"	12 - 13" W	SP0572-04433	SP0572-04447
6-1/2"	14" W	SP0572-04434	SP0572-04448
6-3/4"	15 - 16" W	SP1529643	SP1529642
8"	17 - 18" W	SP1529645	SP1529644
9"	19 - 21" W	SP1529647	SP1529646

Footrest - Fixed - High Mounted - Swing Away Frame (SAS, COMPFU)

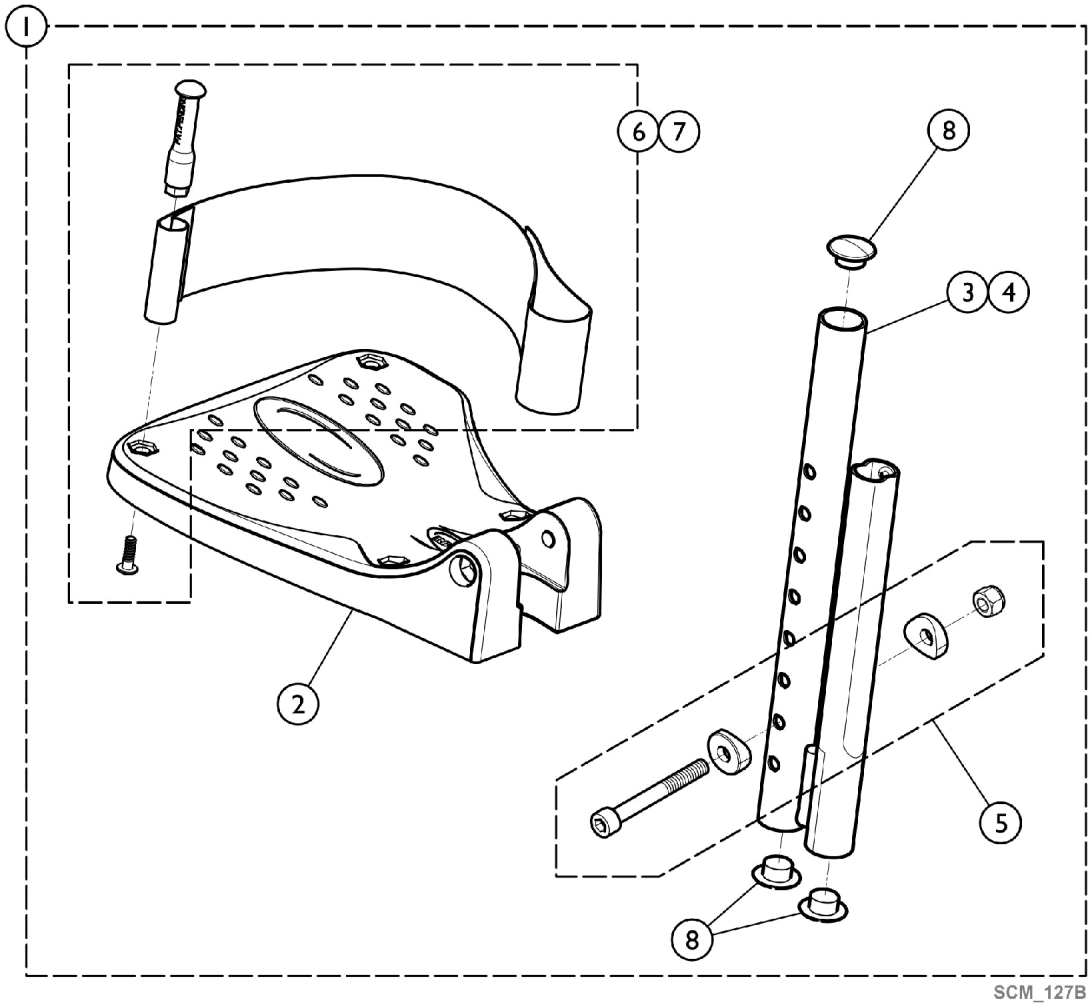

Item Number	Note	Part Number	Description	Quantity Per	
				Package	Assembly
1	A	See Chart	#1. Footrest Complete	1	1
2		See Chart	#2. Footplate	1	1
3		SP1511849-0010	Footrest Tube, Standard Straight, Fixed Frame	1	1
4		SP1506244-0699	Footrest Tube, Long Straight, Fixed Frame	1	1
5		SP1434612	Kit, Hardware, Footrest Tube	1	1
6		SP0587-05201	Kit, Heel Strap, Adjustable, Small	1	1
7		SP1492315	Kit, Heel Strap, Adjustable, Medium	1	1
8		SP1424576	Plastic Cap Black (7/8")	1	1

NOTE: A - Item includes 2, 3, 4, 5, 6, 7, and item 8.

Footrest - Fixed - High Mounted - Swing Away Frame (SAS, COMPFU)

#1. Footrest Complete

Chair Width	Left Footrest	Right Footrest
14" W	SP1587842	SP1587843
15" W	SP1587844	SP1587845
16" W	SP1588156	SP1588157
17 - 18" W	SP1532070	SP1532066
19 - 20" W	SP1532072	SP1532068
21" W	SP1601786 See Note(s) A	SP1601787 See Note(s) A
NOTE: A - Footrest includes Heel Strap.		

Footrest - Fixed - High Mounted - Swing Away Frame (SAS, COMPFU)

#2. Footplate

Footplate Size	Chair Width	Left Footplate	Right Footplate
5-1/4"	12 - 13" W	SP0572-04433	SP0572-04447
6-1/2"	14" W	SP0572-04434	SP0572-04448
6-3/4"	15 - 16" W	SP1529643	SP1529642
8"	17 - 18" W	SP1529645	SP1529644
9"	19 - 21" W	SP1529647	SP1529646

Adjustable Angle and Depth - Swing Away Frame (SAS, COMADFU)

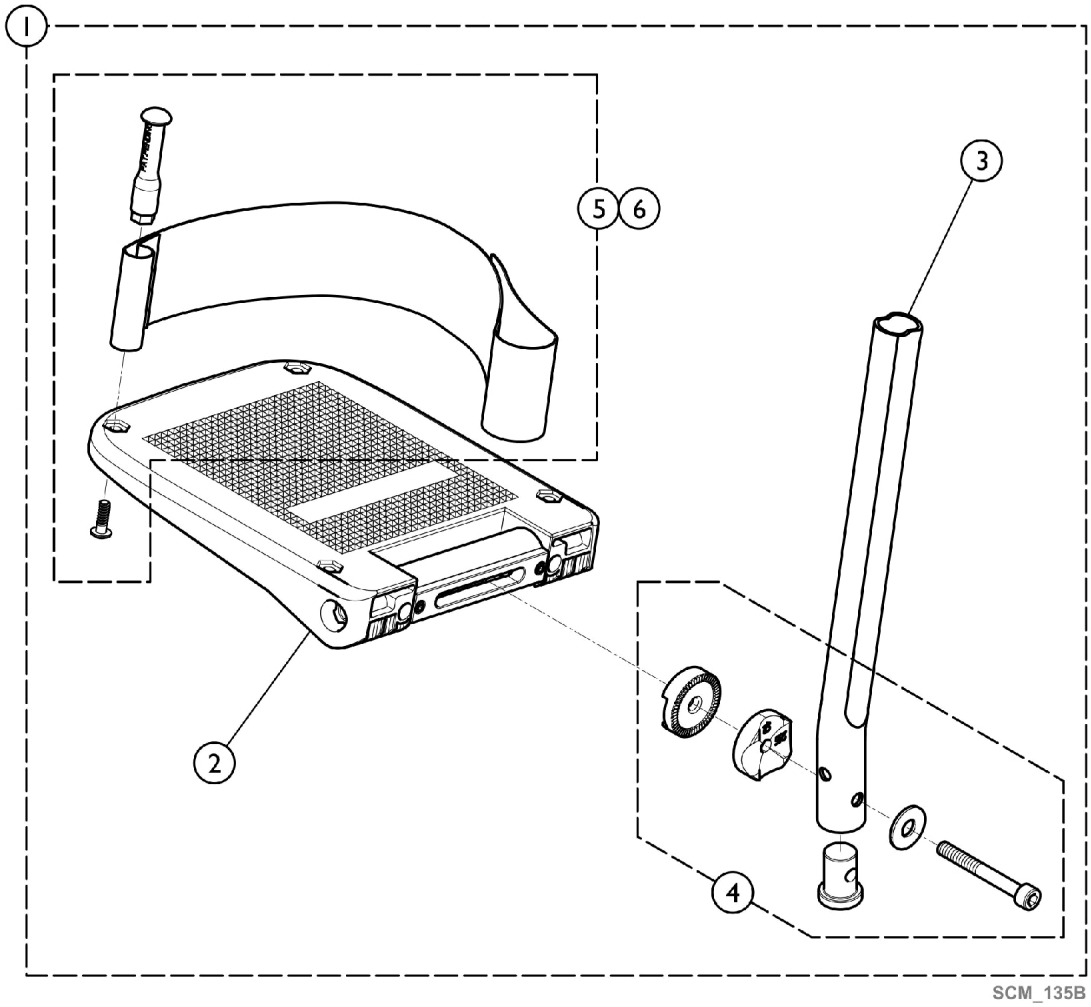

Adjustable Angle and Depth - Swing Away Frame (SAS, COMADFU)

Item Number	Note	Part Number	Description	Quantity Per	
				Package	Assembly
1	A	See Chart	#1. Footrest - Complete	1	1
2		See Chart	#2. Footplate	1	1
3		SP1541994	Tube, Footrest, Short, Angle and Adjustable Depth	1	1
3		SP1558855-0010	Tube, Standard, Footrest, Angle and Adjustable Depth	1	1
3		SP1533719	Tube, Standard w/ Heavy Bar	1	1
3		SP1434563-0010	Long Tube for Fixed and Adjustable Footrest	1	1
4		SP1430839	Kit, Hardware, Adjustable Footplate, Short Spacer	1	1
4		SP1430840	Kit, Hardware, Adjustable Footplate, Long Spacer	1	1
5		SP0587-05201	Kit, Heel Strap, Adjustable, Small	1	1
6		SP1492315	Kit, Heel Strap, Adjustable, Medium	1	1

NOTE: A - Includes items 2, 3, 4, 5, and item 6.

#1. Footrest - Complete

Chair Width	Short Tube (SAS)	Standard Tube (SASTD)	Long Tube (SAL)
12" W - Left	SP1587834	SP1587406	SP1587443
12" W - Right	SP1587835	SP1587438	SP1587444
13" W - Left	SP1587836	SP1587439	SP1587445
13" W - Right	SP1587837	SP1587440	SP1587446
14" W - Left	SP1587838	SP1587441	SP1587447
14" W - Right	SP1587839	SP1587442	SP1587448
15" W - Left	SP1548477	SP1428657	SP1440816
15" W - Right	SP1548478	SP1428651	SP1440810
16" W - Left	SP1548487	SP1428658	SP1440817
16" W - Right	SP1548488	SP1428652	SP1440811
17" W - Left	SP1548489	SP1428659	SP1440818
17" W - Right	SP1548490	SP1428653	SP1440812
18" W - Left	SP1548491	SP1428660	SP1440819
18" W - Right	SP1548492	SP1428654	SP1440813
19" W - Left	SP1548518	SP1428661	SP1440820
19" W - Right	SP1548519	SP1428655	SP1440814
20" W - Left	SP1548520	SP1532964	SP1440821
20" W - Right	SP1548521	SP1532963	SP1440815
21" W - Left	SP1601788	SP1601790	SP1601792
21" W - Right	SP1601789	SP1601791	SP1601793

Adjustable Angle and Depth - Swing Away Frame (SAS, COMADFU)

#2. Footplate

Size	Chair Width	Part Number
4-1/4"	12 - 13" W	SP5106371
5-1/4"	14" W	SP5106373
5-1/2"	15 - 16" W	SP5106374
6-1/8"	17 - 18" W	SP5106375
6-1/2"	19" W	SP5106594
7"	20 - 21" W	SP5106376

Footrest - Adjustable Angle and Depth - Fixed Frame (FXSTD, FXL, COMADFU)

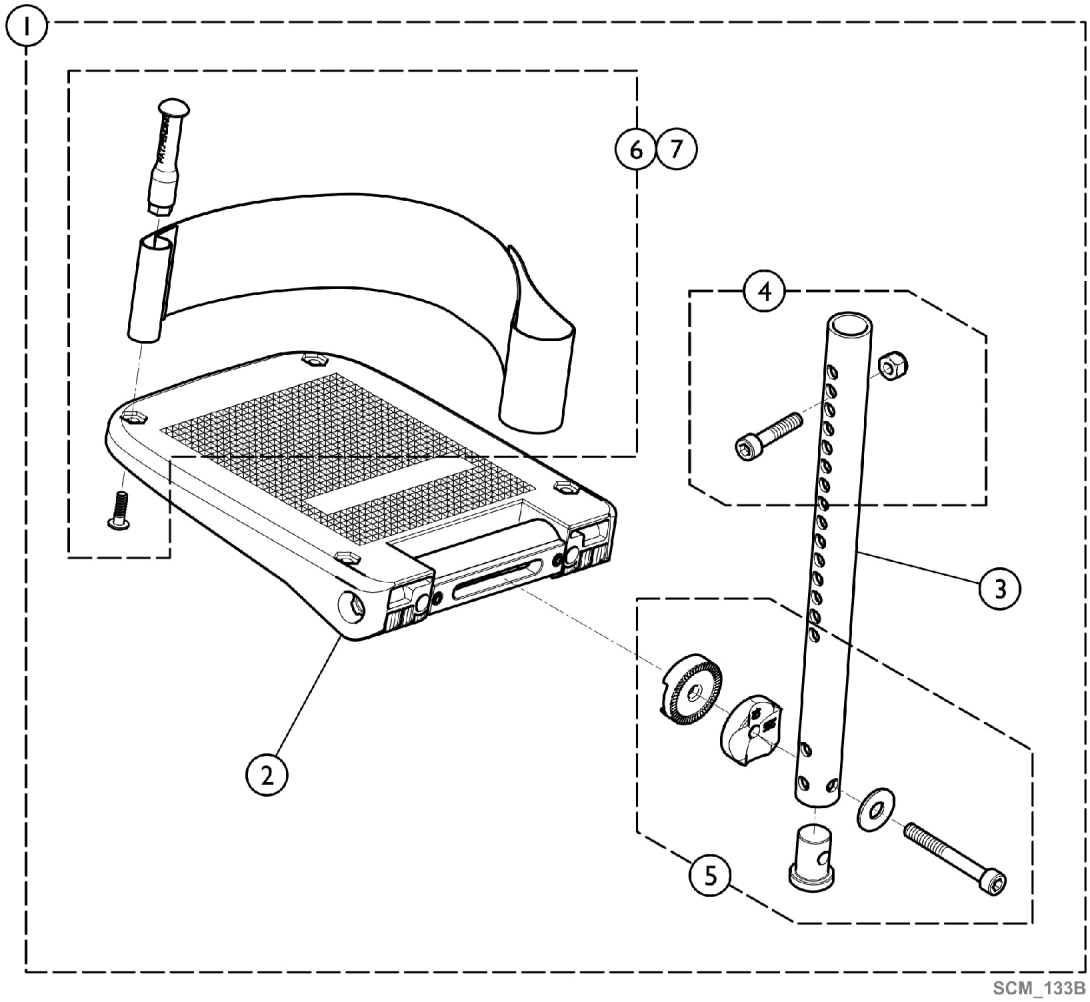

Footrest - Adjustable Angle and Depth - Fixed Frame (FXSTD, FXL, COMADFU)

Item Number	Note	Part Number	Description	Quantity Per	
				Package	Assembly
1	A	See Chart	#1. Footrest - Complete	1	1
2		See Chart	#2. Footplate	1	1
3		SP1511849-0010	Footrest Tube, Standard Straight, Fixed Frame	1	1
3		SP1506244-0699	Footrest Tube, Long Straight, Fixed Frame	1	1
4		SP1602122	Kit, Hardware, Footrest Adjustable Tube w/ Fixed Frame	1	1
5		SP1641026	Kit, Hardware, Adjustable Footplate, Short Spacer	1	1
5		SP1430840	Kit, Hardware, Adjustable Footplate, Long Spacer	1	1
6		SP0587-05201	Kit, Heel Strap, Adjustable, Small	1	1
7		SP1492315	Kit, Heel Strap, Adjustable, Medium	1	1

NOTE: A - Includes items 2, 3, 4, 5, 6, and item 7.

#1. Footrest - Complete

Chair Width	Standard Tube	Long Tube
12" W - Left	SP1591045	SP1587451
12" W - Right	SP1591046	SP1587452
13" W - Left	SP1591047	SP1587453
13" W - Right	SP1591052	SP1587454
14" W - Left	SP1591053	SP1587455
14" W - Right	SP1591054	SP1587456
15" W - Left	SP1591055	SP1587457
15" W - Right	SP1591056	SP1587458
16" W - Left	SP1587513	SP1587459
16" W - Right	SP1587604	SP1587460
17" W - Left	SP1587615	SP1587461
17" W - Right	SP1587616	SP1587462
18" W - Left	SP1587617	SP1587463
18" W - Right	SP1587698	SP1587464
19" W - Left	SP1587699	SP1587465
19" W - Right	SP1587747	SP1587466
20" W - Left	SP1587748	SP1587467
20" W - Right	SP1587749	SP1587468
21" W - Left	SP1590816 See Note(s) A	SP1601794 See Note(s) A
21" W - Right	SP1590817 See Note(s) A	SP1601795 See Note(s) A

NOTE: A - Includes Heel Strap.

Footrest - Adjustable Angle and Depth - Fixed Frame (FXSTD, FXL, COMADFU)

#2. Footplate

Size	Chair Width	Part Number
4-1/4"	12 - 13" W	SP5106371
5-1/4"	14" W	SP5106373
5-1/2"	15" W	SP5106374
6-1/8"	16" W	SP5106375
6-1/2"	17, 19, 20, 21" W	SP5106594
7"	18" W	SP5106376

Adjustable Angle and Depth - High Mounted - Swing Away Frame
(SAS, COMADFU)

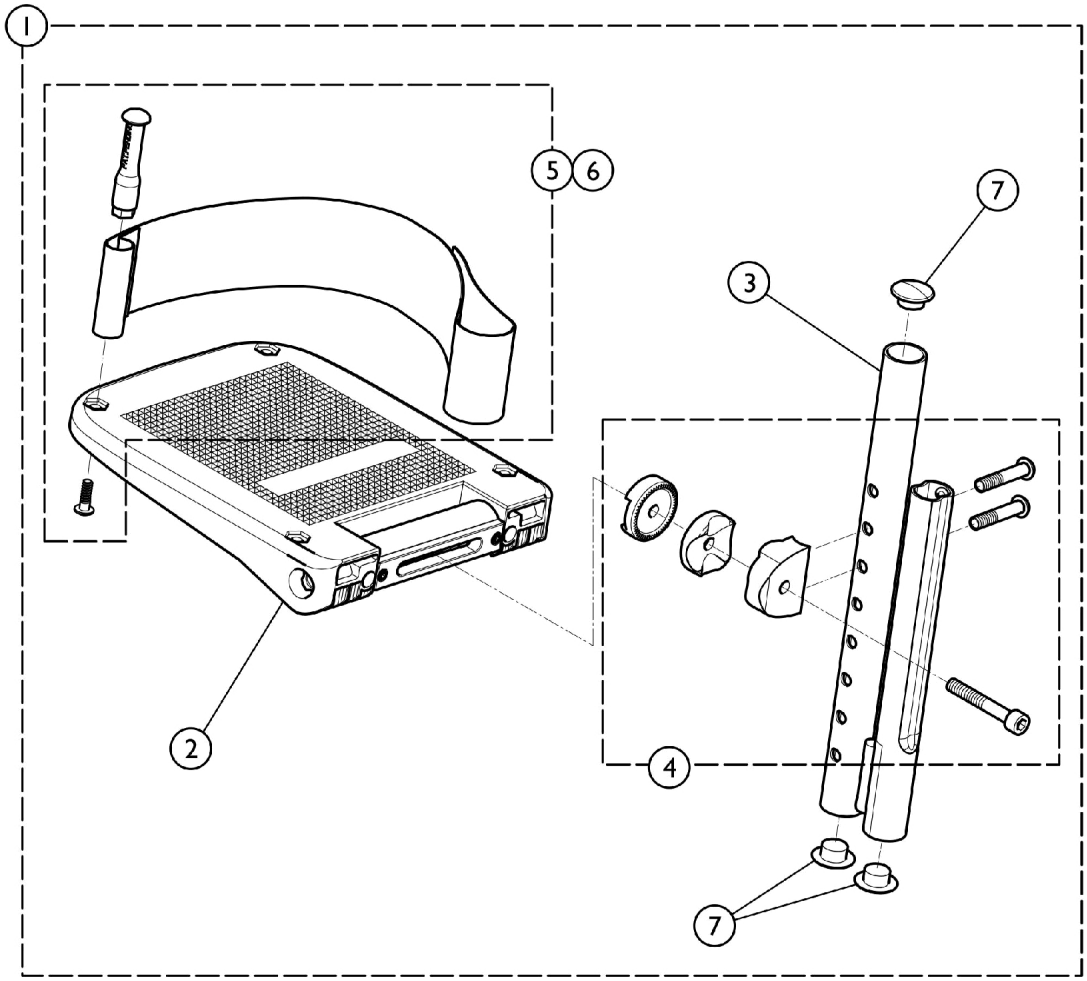

SCM_134B

Adjustable Angle and Depth - High Mounted - Swing Away Frame
(SAS, COMADFU)

Item Number	Note	Part Number	Description	Quantity Per	
				Package	Assembly
1	A	See Chart	#1. Footrest - Complete	1	1
2		See Chart	#2. Footplate	1	1
3		SP1531202-0699	Tube, Footrest, High Mounted - Left	1	1
3		SP1531203-0699	Tube, Footrest, High Mounted - Right	1	1
4		SP1533714	Kit, Hardware, Angle and Adjustable Depth Footrest, High Mounted Tube	1	1
5		SP0587-05201	Kit, Heel Strap, Adjustable, Small	1	1
6		SP1492315	Kit, Heel Strap, Adjustable, Medium	1	1
7		SP1424576	Plastic Cap Black (7/8")	1	3

NOTE: A - Includes items 2, 3, 4, 5, 6, and 7.

#1. Footrest - Complete

Chair Width	Left Footrest	Right Footrest
14" W	SP1588277	SP1588278
15" W	SP1586054	SP1586052
16" W	SP1586068	SP1586053
17 - 18" W	SP1532078	SP1532074
19 - 20" W	SP1532080	SP1532076
21" W	SP1601796 See Note(s) A	SP1601797 See Note(s) A

NOTE: A - Includes Heel Strap.

Adjustable Angle and Depth - High Mounted - Swing Away Frame
(SAS, COMADFU)

#2. Footplate

Size	Chair Width	Part Number
3-1/4"	14" W	SP1518638
4-1/4"	15" W	SP5106371
5-1/4"	16" W	SP5106373
5-1/2"	17 - 18" W	SP5106374
6-1/2"	19 - 21" W	SP5106594

Footrest - One Piece Footplate (OFPU)

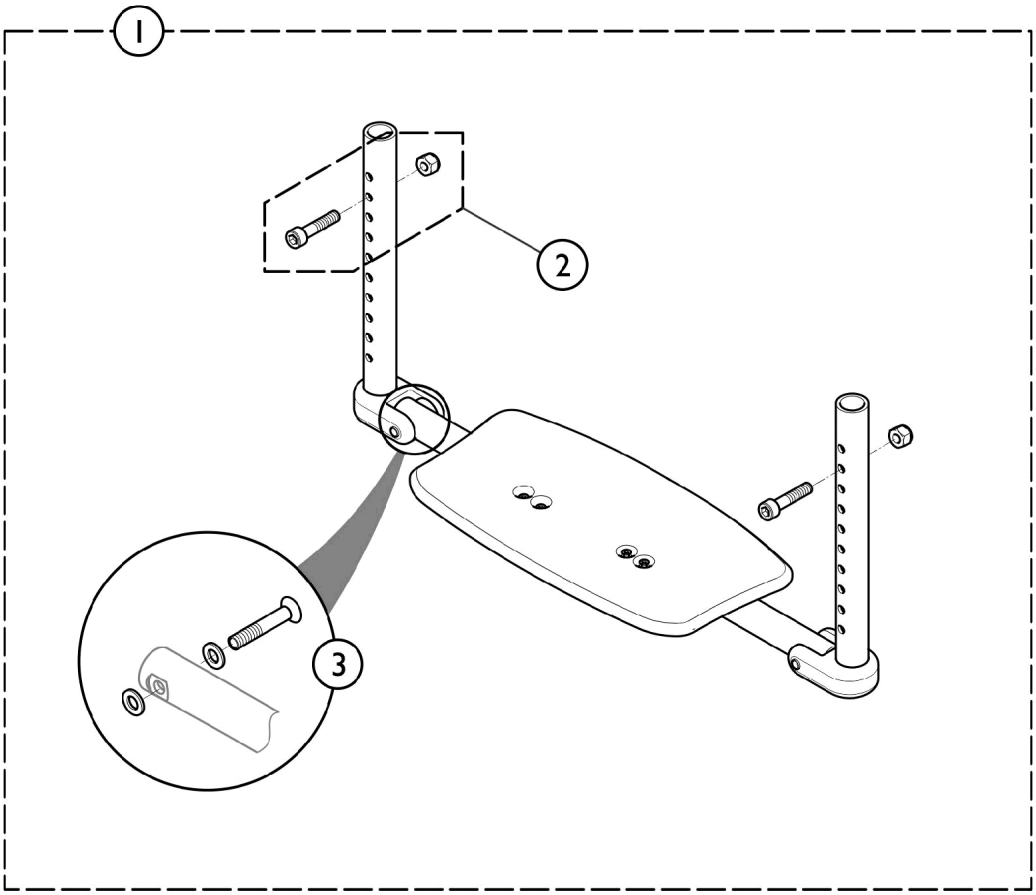

SCM_155B

Item Number	Note	Part Number	Description	Quantity Per	
				Package	Assembly
1	A	See Chart	#1. Footrest - Complete	1	1
2		SP1602218	Kit, Hardware, Fixed Frame, One Piece Footrest	1	1
3		SP1606180	Kit, Hardware, Tube Support, One Piece Footrest	1	1

NOTE: A - Includes items 2 and 3.

#1. Footrest - Complete

Chair Width	Standard Tube	Long Tube
12" W	SP1587750	SP1587824
13" W	SP1587751	SP1587825
14" W	SP1587767	SP1587826
15" W	SP1587768	SP1587827
16" W	SP1587769	SP1587828
17" W	SP1587770	SP1587829
18" W	SP1587771	SP1587830

Footrest - One Piece Footplate (OFPU)

#1. Footrest - Complete

Chair Width	Standard Tube	Long Tube
19" W	SP1587813	SP1587831
20" W	SP1587814	SP1587832
21" W	SP1587818	SP1587833

Fendered Side Guards (SIDEGRDS-FDR)

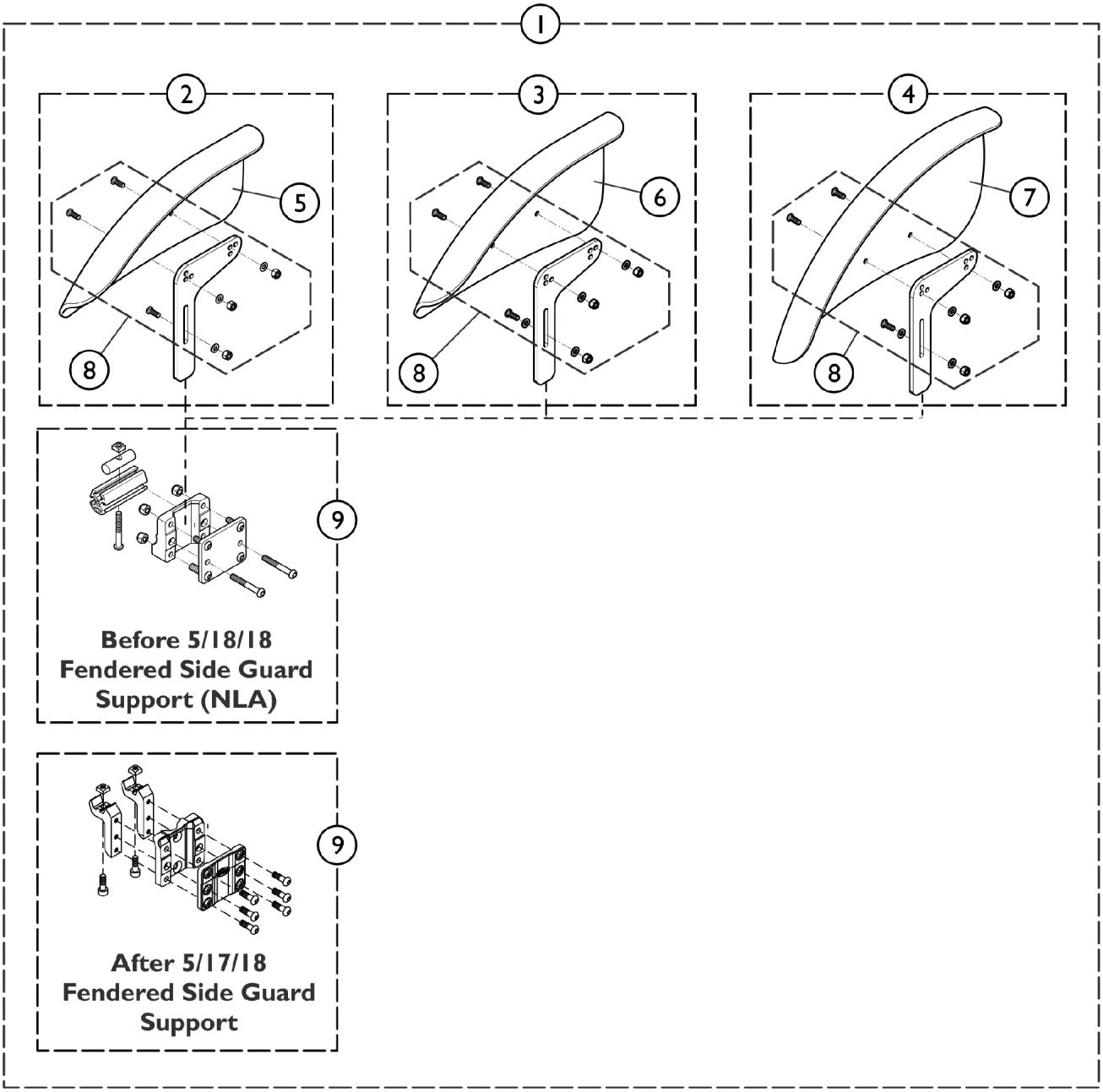

SCM_538A

Fendered Side Guards (SIDEGRDS-FDR)

Item Number	Note	Part Number	Description	Quantity Per Package	Quantity Per Assembly
1	A	See Chart	#1. Fendered Side Guard - Complete	1	1
2	C	SP1601477	Kit, Fendered Side Guard, Medium, w/ L Support - Left	1	1
2	C	SP1601478	Kit, Fendered Side Guard, Medium, w/ L Support - Right	1	1
3	C	SP1601479	Kit, Fendered Side Guard, Large, w/ L Support - Left	1	1
3	C	SP1601480	Kit, Fendered Side Guard, Large, w/ L Support - Right	1	1
4	C	SP1601481	Kit, Fendered Side Guard, Extra Large, w/ L Support - Left	1	1
4	C	SP1601482	Kit, Fendered Side Guard, Extra Large, w/ L Support - Right	1	1
5	C	SP1586515	Fendered Side Guard, Medium - Left	1	1
5	C	SP1586516	Fendered Side Guard, Medium - Right	1	1
6	C	SP1586517	Fendered Side Guard, Large - Left	1	1
6	C	SP1586518	Fendered Side Guard, Large - Right	1	1
7	C	SP1584373	Fendered Side Guard, Extra Large - Left	1	1
7	C	SP1584372	Fendered Side Guard, Extra Large - Right	1	1
8		SP1601485	Kit, Hardware, Fendered Side Guard, L Support	1	1
9	B	SP1651135	Fendered Side Guard Support	1	1

NOTE: A - Includes items 2, 3, 4, 5, 6, 7, 8, and 9.
B - Item #9 is backward compatible for wheelchairs manufactured Before 05/18/18 also.
C - Refer to Item #1chart titled "Fendered Side Guard - Complete" for additional information to help identify the correct Fender Side Guard "SIZE" to order. Need to know both Rear Wheel Size and Rear Seat To Floor (RSTF).

#1. Fendered Side Guard - Complete

Rear Wheel Size	Rear Seat To Floor (RSTF)	Fendered Side Guard Size	Left Side	Right Side
22"	14", 15"	XL = Extra Large	SP1651090	SP1651091
22"	16"	L = Large	SP1651088	SP1651089
22"	17"	M = Medium	SP1651086	SP1651087
22"	18"	N/A	N/A	N/A
24"	14"	N/A	N/A	N/A
24"	15", 16"	XL = Extra Large	SP1651090	SP1651091
24"	17", 18"	L = Large	SP1651088	SP1651089
24"	19"	M = Medium	SP1651086	SP1651087
25"	15"	N/A	N/A	N/A
25"	16", 17", 18"	XL = Extra Large	SP1651090	SP1651091
25"	19"	L = Large	SP1651088	SP1651089
25"	20"	M = Medium	SP1651086	SP1651087

Side Guards (SIDEGRDS)

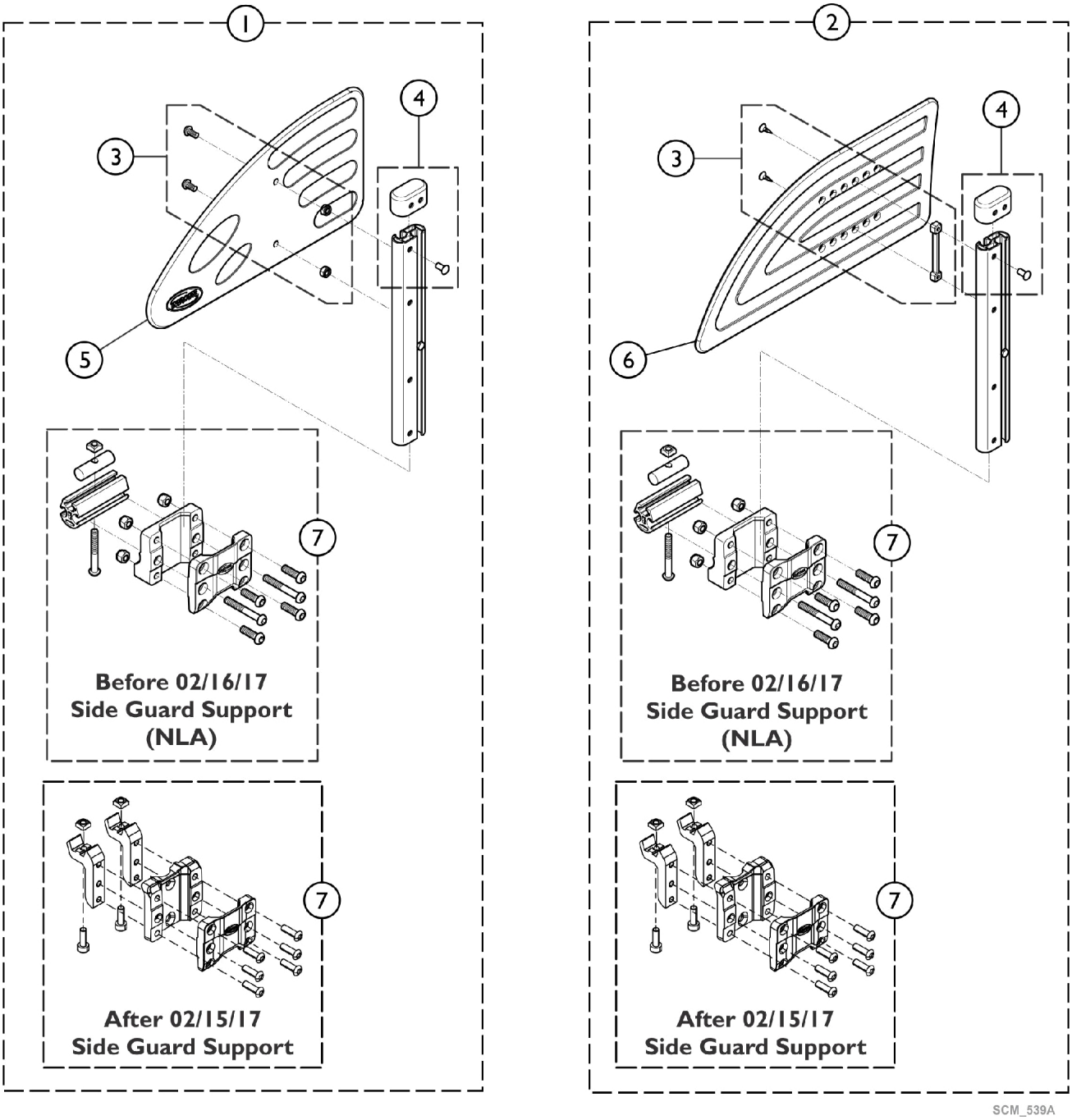

Side Guards (SIDEGRDS)

Item Number	Note	Part Number	Description	Quantity Per	
				Package	Assembly
1	A	SP1639977	Side Guard, Large - Left, (14-16" D)	1	1
1	A	SP1639978	Side Guard, Large - Right, (14-16" D)	1	1
2	B	SP1640133	Side Guard, Extra Large - Left (17-20" D)	1	1
2	B	SP1640134	Side Guard, Extra Large - Right (17-20" D)	1	1
3		SP1601494	Kit, Hardware, Clothing Guard and Armpad	1	1
4		SP1513515	Kit, Clothing Guard Junior Cap	1	1
5		SP1425601	Clothing Guard, Black, T-Arm (HATD / HATF)	1	1
6		SP1434725	Clothing Guard, Height Adjustable	1	1
7	C	SP1640068	Support, Side Guard	1	1

NOTE: A - Includes items 3, 4, 5, and 7.
B - Includes itemd 3, 4, 6, and 7.
C - Item #7 is backward compatible for wheelchairs manufactured Before 02/16/17 also.

Armrest, T-Style, Adjustable, Removable Desk Length Armpad (HATD)

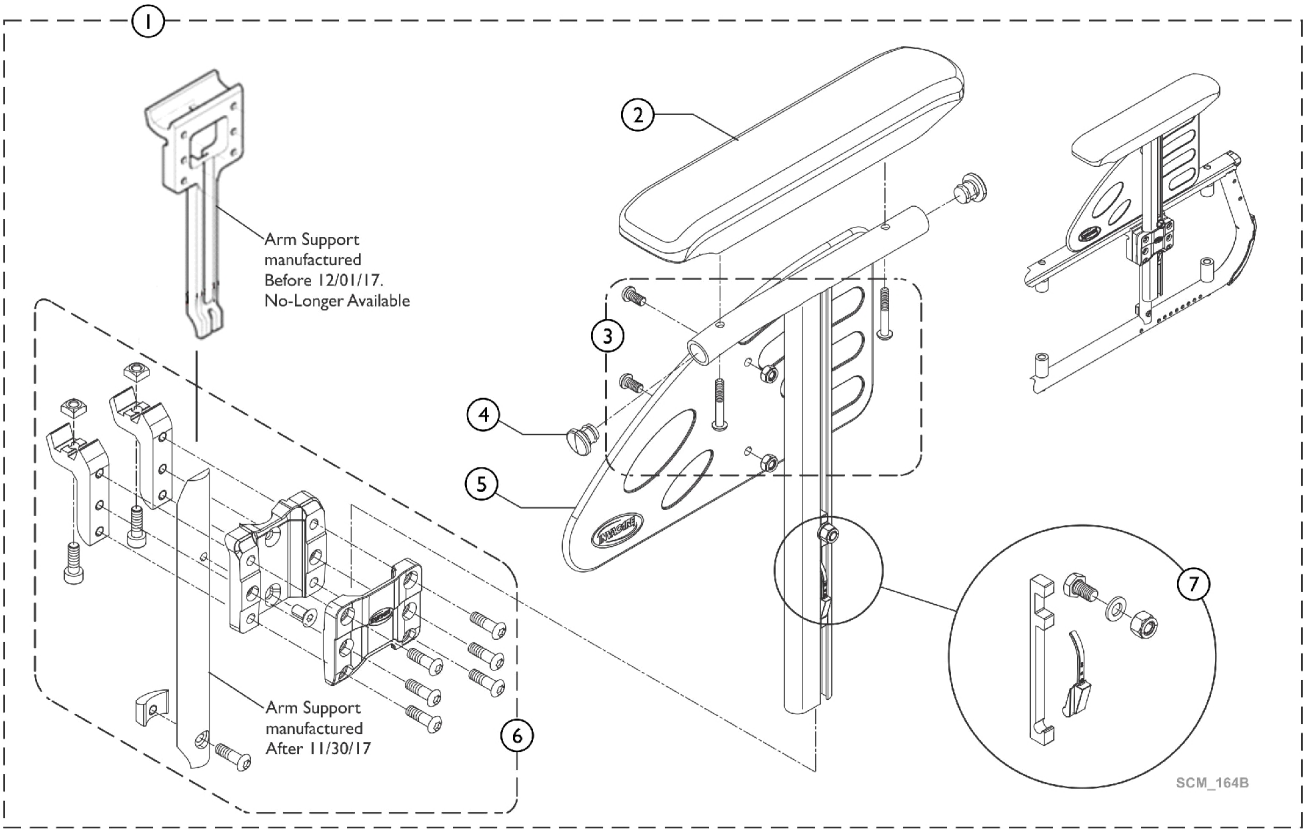

Armrest, T-Style, Adjustable, Removable Desk Length Armpad (HATD)

Item Number	Note	Part Number	Description	Quantity Per	
				Package	Assembly
1	A	SP1639973-NLA	NLA - T-Arm Assembly, Removable, Adjustable Height, Desk Length Armpad - Left	1	1
1	A	SP1639974-NLA	NLA - T-Arm Assembly, Removable, Adjustable Height, Desk Length Armpad - Right	1	1
2		SP1543220	Kit, Desk Length Armpad w/ Hardware	1	1
3		SP1601494	Kit, Hardware, Clothing Guard and Armpad	1	1
4		SP0021-20003	Cap, Cylinder, Black (3/4 Dia. x 1/16")	1	4
5		SP1425601	Clothing Guard, Black, T-Arm (HATD / HATF)	1	1
6	B	SP1606666	Support, Armrest, Plastic	1	1
7		SP1589904	Kit, Locking System, T-Arm (HATD / HATF)	1	1

NOTE: A - Includes items 2-7.
B - Item 6 was revised 12/01/17. It is recommended to order (2) ea. of part number SP1606666 for wheelchairs manufactured Before 12/01/17 to match.

Armrest, T-Style, Adjustable, Removable Full Length Armpad (HATF)

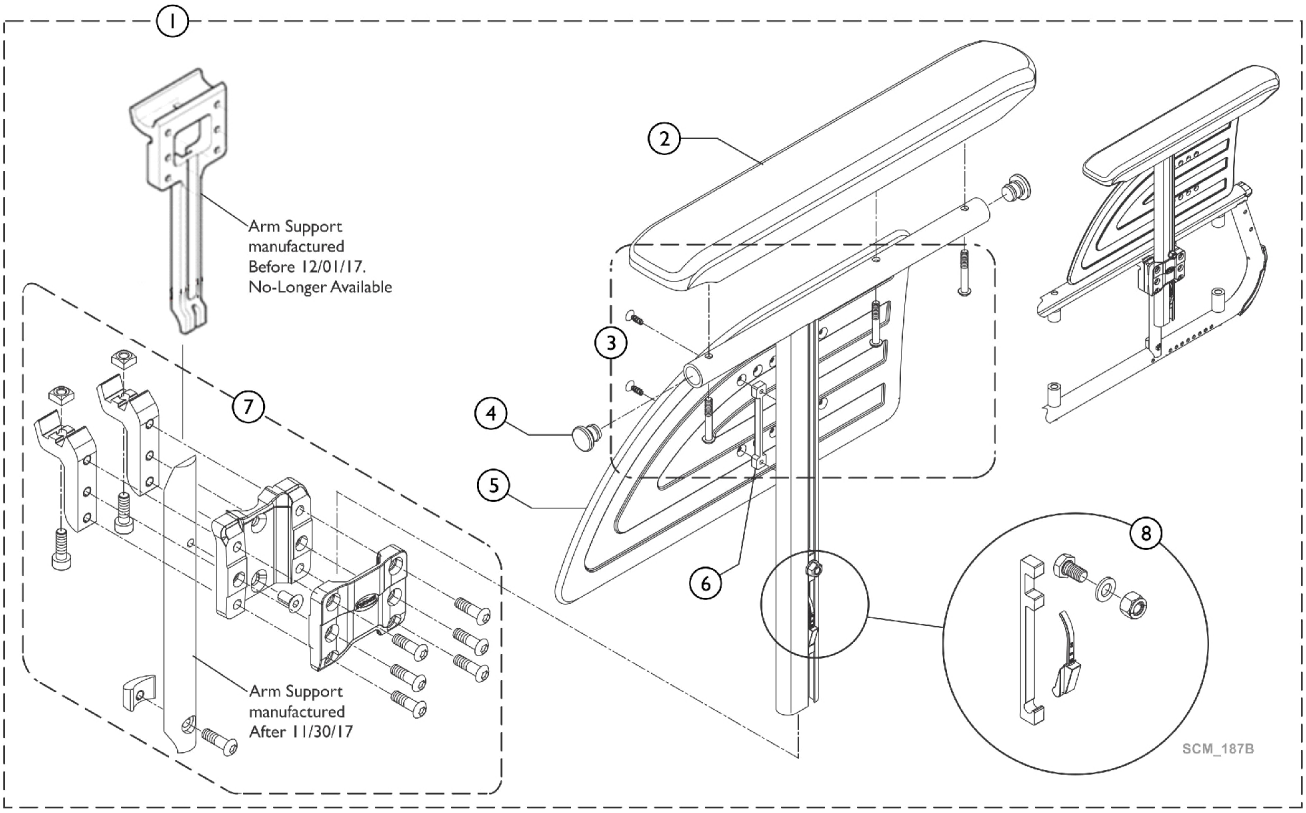

Armrest, T-Style, Adjustable, Removable Full Length Armpad (HATF)

Item Number	Note	Part Number	Description	Quantity Per	
				Package	Assembly
1	A	SP1639975	T-Arm Assembly, Removable, Adjustable Height, Full Length Armpad, Left	1	1
1	A	SP1639976	T-Arm Assembly, Removable, Adjustable Height, Full Length Armpad, Right	1	1
2		SP1543247	Kit, Full Length Armpad w/ Hardware	1	1
3		SP1606075	Kit, Guard, Clothing Hardware, T-Arm	1	1
4		SP0021-20003	Cap, Cylinder, Black (3/4 Dia. x 1/16")	1	4
5		SP1434725	Clothing Guard, Height Adjustable	1	1
6		SP1435388	Double Nut	1	1
7	B	SP1606666	Support, Armrest, Plastic	1	1
8		SP1589904	Kit, Locking System, T-Arm (HATD / HATF)	1	1

NOTE: A - Includes items 2-8.
B - Item 7 was revised 12/01/17. It is recommended to order (2) ea. of part number SP1606666 for wheelchairs manufactured Before 12/01/17 to match.

Armrest, Swing Away - Adjustable, Removable, Desk Length Armpad (FBHAD)

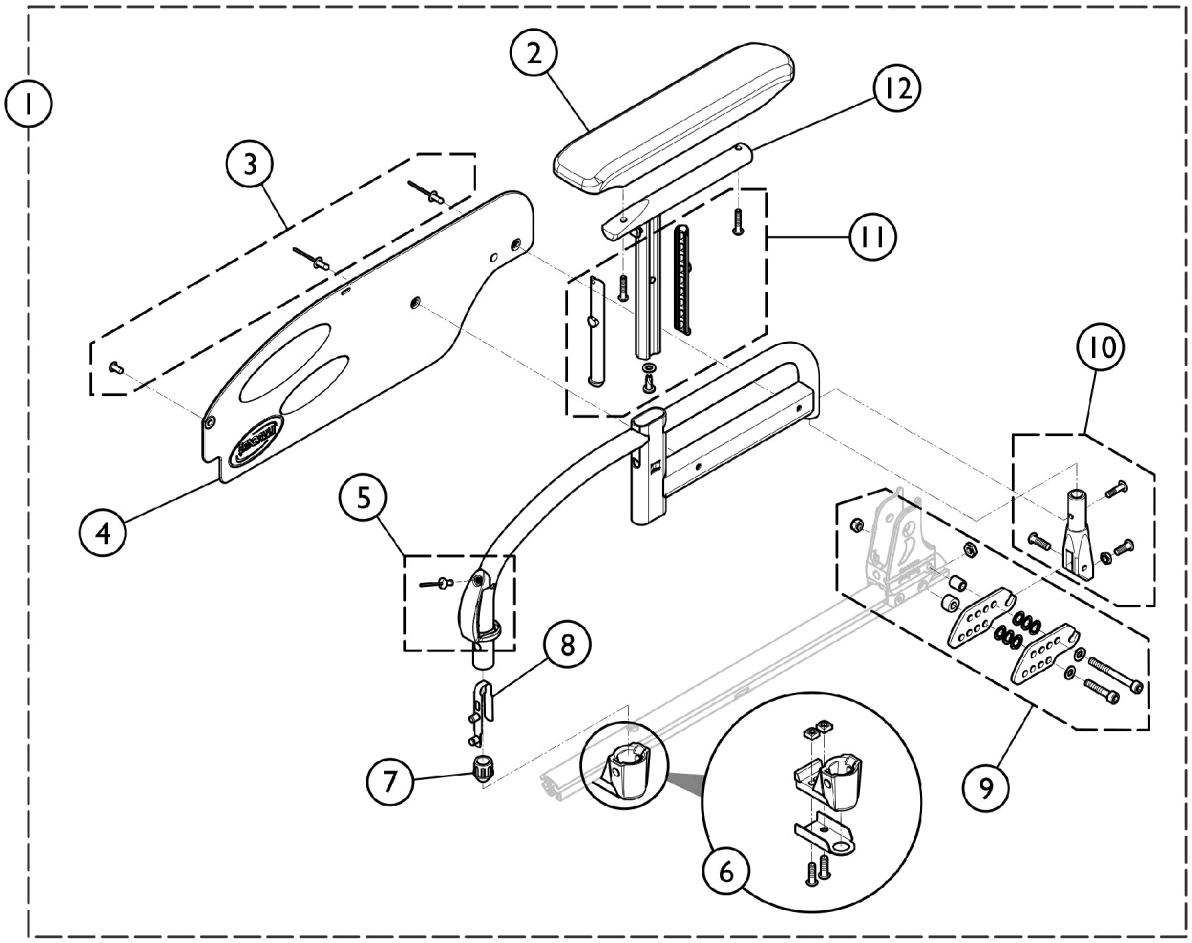

SCM_177B

Item Number	Note	Part Number	Description	Quantity Per Package	Quantity Per Assembly
1	A	See Chart	#1. Armrest Complete	1	1
2		SP1606082	Kit, Desk Length Armpad w/ Hardware	1	1
3		SP1601924	Kit, Guard, Clothing Hardware, T-Arm	1	1
4		SP1426725	Guard, Clothing, T-Arm, Black	1	1
5		SP1601925	Kit, Unlocking Button, T-Arm	1	1
6		SP1601926	Kit, Armrest Locking, T-Arm	1	1
7		SP0572-03405	Cap, Conical, Short	1	1
8		SP1018225	Double Stud Spring	1	1
9		SP1601927	Kit, Desk Armpad Support	1	1
10		SP1601928	Kit, Articulation and Screw	1	1
11		SP1601929	Kit, Plastic Insert and Screw	1	1
12		SP1606077	Kit, Support, Long Armpad	1	1

NOTE: A - Includes items 2 - 12.

Armrest, Swing Away - Adjustable, Removable, Desk Length Armpad (FBHAD)

#1. Armrest Complete

Colors	Left Side	Right Side
Pearl White	SP1584889-0637	SP1584888-0637
Anthracite Black	SP1584889-0609	SP1584888-0609
Pop Blue	SP1584889-0643	SP1584888-0643
Dark Red	SP1584889-0607	SP1584888-0607
Electric Green	SP1584889-0644	SP1584888-0644
Hypnotic Purple	SP1584889-0645	SP1584888-0645
Pearl Grey	SP1584889-0515	SP1584888-0515
Matte Black	SP1584889-0646	SP1584888-0646
Intense Yellow	SP1584889-0647	SP1584888-0647
Vibrating Orange	SP1584889-0648	SP1584888-0648

Armrest, Swing Away - Adjustable, Removable, Full Length Armpad (FBHAF)

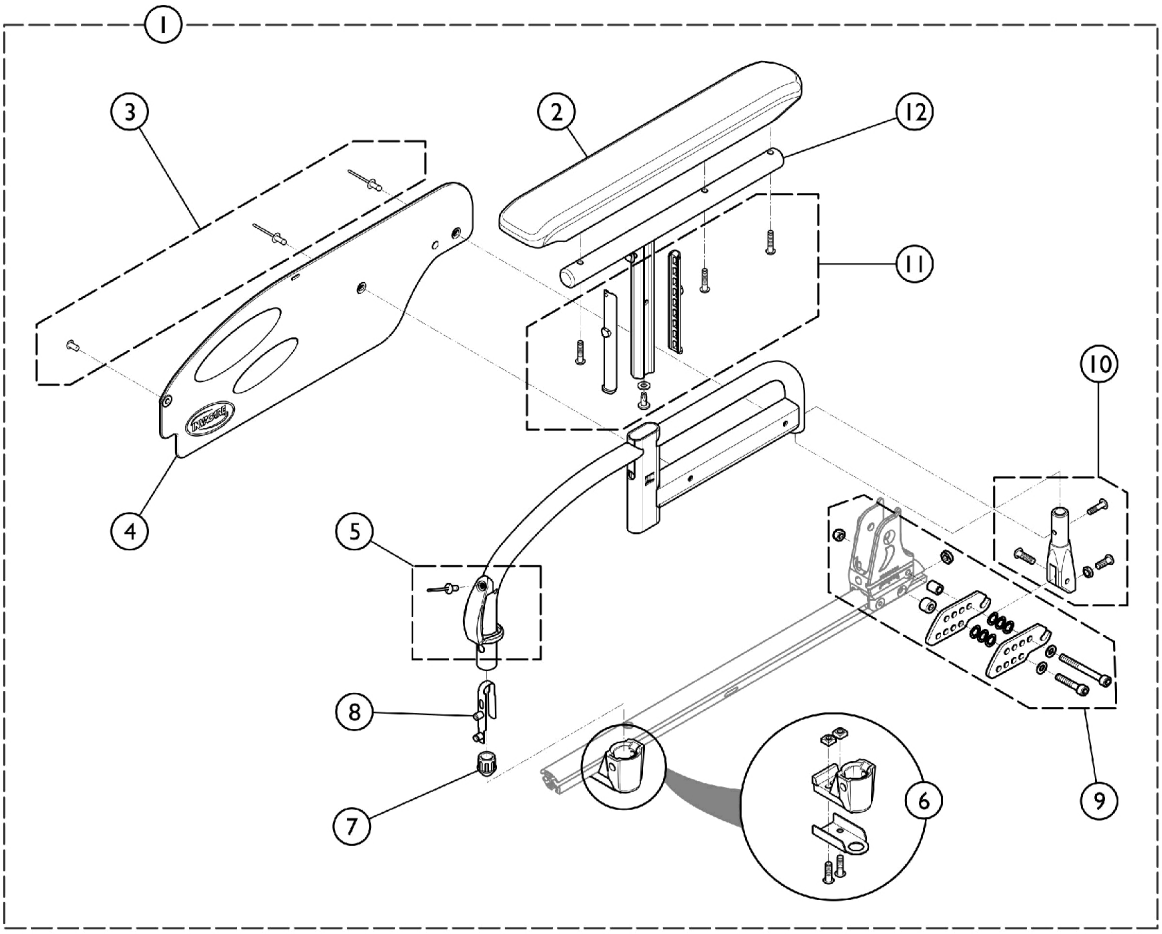

SCM_186A

Item Number	Note	Part Number	Description	Quantity Per Package	Quantity Per Assembly
1	A	See Chart	#1. Armrest Complete	1	1
2		SP1606083	Kit, Full Length Armpad w/ Hardware	1	1
3		SP1601924	Kit, Guard, Clothing Hardware, T-Arm	1	1
4		SP1426725	Guard, Clothing, T-Arm, Black	1	1
5		SP1601925	Kit, Unlocking Button, T-Arm	1	1
6		SP1601926	Kit, Armrest Locking, T-Arm	1	1
7		SP0572-03405	Cap, Conical, Short	1	1
8		SP1018225	Double Stud Spring	1	1
9		SP1601927	Kit, Desk Armpad Support	1	1
10		SP1601928	Kit, Articulation and Screw	1	1
11		SP1601929	Kit, Plastic Insert and Screw	1	1
12		SP1606077	Kit, Support, Long Armpad	1	1

NOTE: A - Includes items 2 - 12.

Armrest, Swing Away - Adjustable, Removable, Full Length Armpad (FBHAF)

#1. Armrest Complete

Colors	Left Side	Right Side
Pearl White	SP1605688-0637	SP1604893-0637
Anthracite Black	SP1605688-0609	SP1604893-0609
Pop Blue	SP1605688-0643	SP1604893-0643
Dark Red	SP1605688-0607	SP1604893-0607
Electric Green	SP1605688-0644	SP1604893-0644
Hypnotic Purple	SP1605688-0645	SP1604893-0645
Pearl Grey	SP1605688-0515	SP1604893-0515
Matte Black	SP1605688-0646	SP1604893-0646
Intense Yellow	SP1605688-0647	SP1604893-0647
Vibrating Orange	SP1605688-0648	SP1604893-0648

Armrest, Swing Away, Padded Handle (AT99)

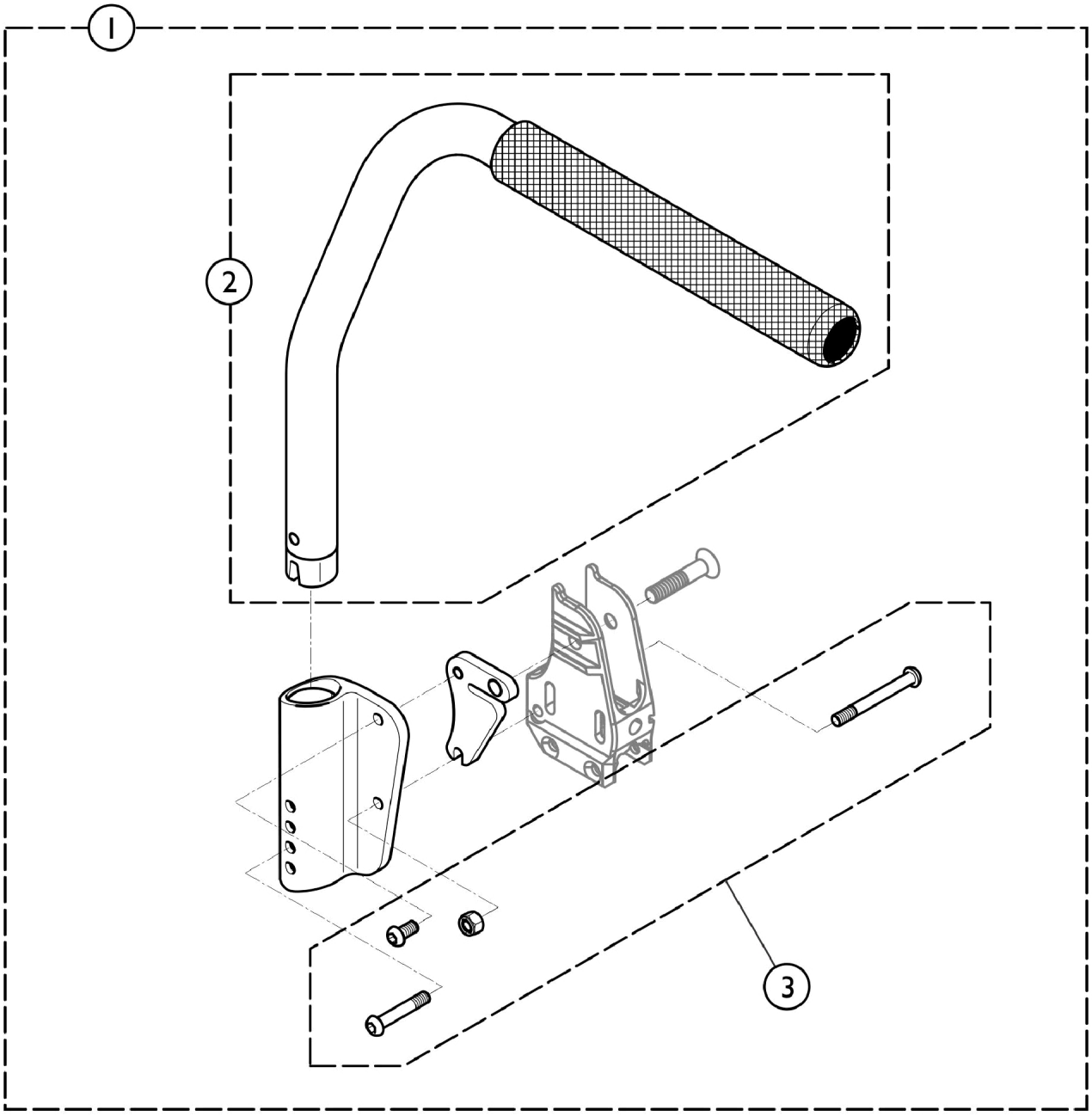

SCM_188A

Armrest, Swing Away, Padded Handle (AT99)

Item Number	Note	Part Number	Description	Quantity Per	
				Package	Assembly
1	A	SP1583753	Swing Away Arm, Tubular, Padded Tube - Left	1	1
1	A	SP1583726	Swing Away Arm, Tubular, Padded Tube - Right	1	1
2		SP1581267	Armrest Assembly, Tubular - Left	1	1
2		SP1581505	Armrest Assembly, Tubular - Right	1	1
3		SP1606078	Kit, Hardware, Swing Away Arm	1	1

NOTE: A - Includes items 2 and 3.

Armrest, Adjustable - Standard Hemi Dartex (ATHA)

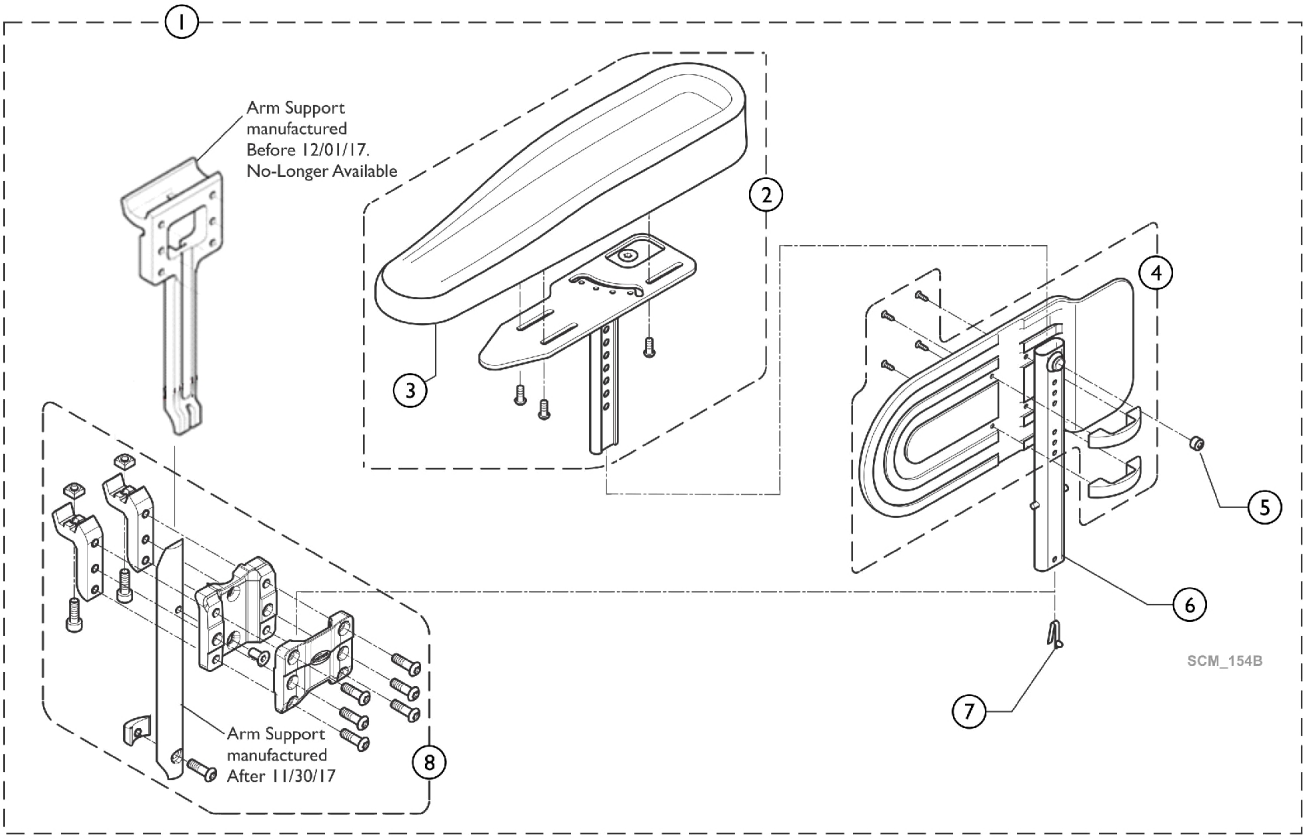

Armrest, Adjustable - Standard Hemi Dartex (ATHA)

Item Number	Note	Part Number	Description	Quantity Per	
				Package	Assembly
1	A	SP1645578	Hemi Armrest, T-Style, Multiposition - Left	1	1
1	A	SP1645579	Hemi Armrest, T-Style, Multiposition - Right	1	1
2		SP1493220	Hemi Dartex Armpad Complete - Left	1	1
2		SP1493219	Hemi Dartex Armpad Complete - Right	1	1
3		SP1493251	Hemi Dartex Armpad	1	1
4		SP1430425	Guard, Clothing Hardware for Hemi Dartex Arm	1	1
5		SP5106533	Screw, Locking (M12 X 10)	1	1
6		SP1443058	Tube, Lowest Arm Rest Tube, Hemi Dartex Arm	1	1
7		SP0027-10003	Spring Pin Locked Armrest	1	1
8	B	SP1606666	Support, Armrest, Plastic	1	1

NOTE: A - Includes items 2-8.
B - Item 8 was revised 12/01/17. It is recommended to order (2) ea. of part number SP1606666 for wheelchairs manufactured Before 12/01/17 to match.

Forks, Caster - Fixed Frame

		FRONT SEAT TO FLOOR HEIGHT (FSTF)							
FORK TYPE:	FRONT WHEEL SIZE	14"	15"	16"	17"	18"	19"	20"	21"
Ultra Low (UL) 1 2	4"	UL1		S2 ⚠	S4	L3	L2		
Small (S) 1 2 3 4	5"		UL2	S1 ⚠	S3	L2	L1	L3	
	6"				S2	S4	L3	L2	
Large & Large w/ Spacer (L) 1 2 3	7"					S3	L2	L1	L3

⚠ Be aware: ONLY 5/8" between floor and fork Spacer is added to achieve height

NOTE 1: The Table above reflects the Fork Letter (UL), (S), or (L) and the numbered Hole Selection for the Caster Screw to go through (1, 2, 3, or 4th position)

NOTE 2: The Table above was developed from the Myon HC Price List model picks. The model picks have a different description compared to the Parts Catalog.
The following listed below is a cross reference

Price List Description		Parts Catalog Description
#1 or 5 Large (L) w/ Spacer	=	Medium High
#2 or 6 Large (L)	=	Medium Low
#3 or 7 Small (S)	=	Short
#4 or 8 Ultra Low (UL)	=	Extra Short

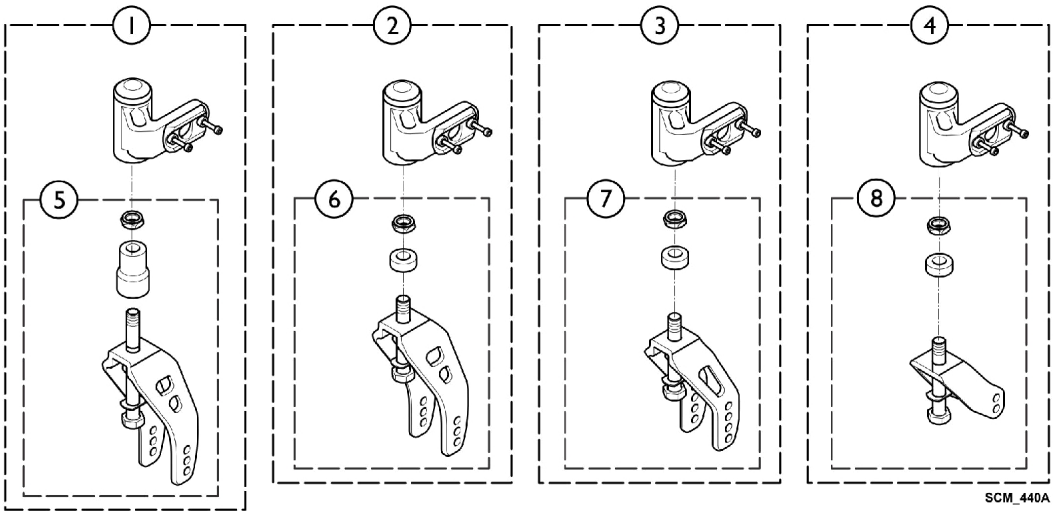

Forks, Caster - Fixed Frame

Item Number	Note	Part Number	Description	Quantity Per	
				Package	Assembly
1		See Chart	#1. Fork Assembly - Medium High - Complete	1	1
2		See Chart	#2. Fork Assembly - Medium Low - Complete	1	1
3		See Chart	#3. Fork Assembly - Short - Complete	1	1
4		See Chart	#4. Fork Assembly - Extra Short - Complete	1	1
5	A	See Chart	#5. Fork - Medium High - Complete	1	1
6	B	See Chart	#6. Fork - Medium Low - Complete	1	1
7	C	See Chart	#7. Fork - Short Low - Complete	1	1
8	D	SP1584029-0601	Kit, Fork Extra Short, Low, Black	1	1

NOTE: A - Used with Item 1.
B - Used with Item 2.
C - Used with Item 3.
D - Used with Item 4.

Forks, Caster - Fixed Frame

#1. Fork Assembly - Medium High - Complete

Fork Style	Medium High w/o Accent	Medium High, Blue Accent	Medium High, Purple Accent
Left Side	SP1583854-0005	SP1583854-0641	SP1583854-0642
Right Side	SP1586290-0005	SP1586290-0641	SP1586290-0642

#2. Fork Assembly - Medium Low - Complete

Fork Style	Medium Low w/o Accent	Medium Low, Blue Accent	Medium Low, Purple Accent
Left Side	SP1583852-0005	SP1583852-0641	SP1583852-0642
Right Side	SP1586286-0005	SP1586286-0641	SP1586286-0642

#3. Fork Assembly - Short - Complete

Fork Style	Short w/o Accent	Short, Blue Accent	Short, Purple Accent
Left Side	SP1583853-0005	SP1583853-0641	SP1583853-0642
Right Side	SP1586288-0005	SP1586288-0641	SP1586288-0642

#4. Fork Assembly - Extra Short - Complete

Fork Style	Extra Short w/o Accent	Extra Short, Blue Accent	Extra Short, Purple Accent
Left Side	SP1583762-0005	SP1583762-0641	SP1583762-0642
Right Side	SP1586292-0005	SP1586292-0641	SP1586292-0642

Forks, Caster - Fixed Frame

#5. Fork - Medium High - Complete

Fork - Medium High w/o Accent	Fork - Medium High Blue Accent	Fork - Medium High Purple Accent
SP1584027-0005	SP1584027-0641	SP1584027-0642

#6. Fork - Medium Low - Complete

Medium Low w/o Accent	Medium Low Blue Accent	Medium Low Purple Accent
SP1584025-0005	SP1584025-0641	SP1584025-0642

#7. Fork - Short Low - Complete

Short Low w/o Accent	Short Low Blue Accent	Short Low Purple Accent
SP1584026-0005	SP1584026-0641	SP1584026-0642

Forks, Caster - Swing Away Frame

		FRONT SEAT TO FLOOR HEIGHT (FSTF)							
FORK TYPE:	FRONT WHEEL SIZE	14"	15"	16"	17"	18"	19"	20"	21"
Ultra Low (UL) 1 2	4"	UL1		S2 ⚠	S4	L3	L2		
Small (S) 1 2 3 4	5"		UL2	S1 ⚠	S3	L2	L1	L3	
	6"				S2	S4	L3	L2	
Large & Large w/ Spacer (L) 1 2 3	7"					S3	L2	L1	L3

⚠ Be aware: ONLY 5/8" between floor and fork

Spacer is added to achieve height

NOTE 1: The Table above reflects the Fork Letter (UL), (S), or (L) and the numbered Hole Selection for the Caster Screw to go through (1, 2, 3, or 4th position)

NOTE 2: The Table above was developed from the Myon HC Price List model picks. The model picks have a different description compared to the Parts Catalog.
The following listed below is a cross reference

Price List Description		Parts Catalog Description
#1 or 5 Large (L) w/ Spacer	=	Medium High
#2 or 6 Large (L)	=	Medium Low
#3 or 7 Small (S)	=	Short
#4 or 8 Ultra Low (UL)	=	Extra Short

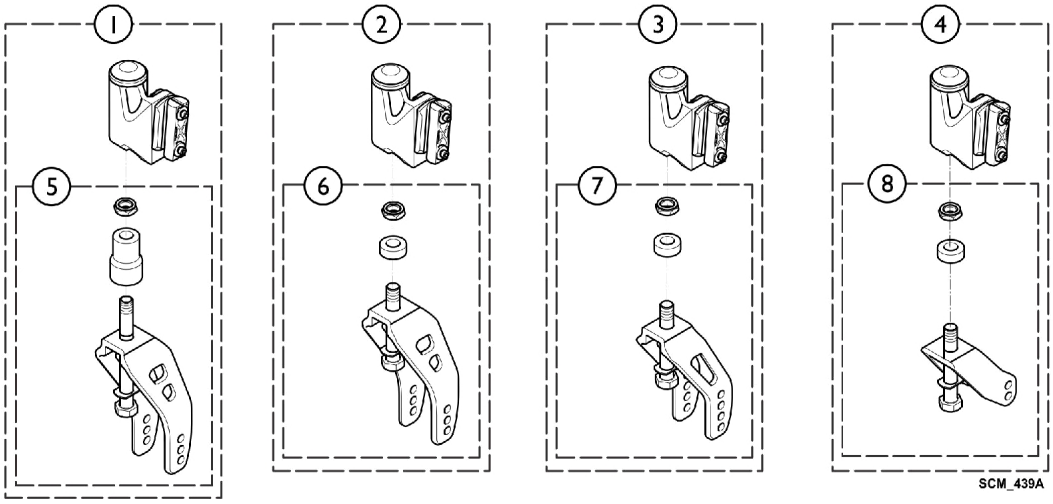

Forks, Caster - Swing Away Frame

Item Number	Note	Part Number	Description	Quantity Per	
				Package	Assembly
1		See Chart	#1. Fork Assembly - Medium High - Complete	1	1
2		See Chart	#2. Fork Assembly - Medium Low - Complete	1	1
3		See Chart	#3. Fork Assembly - Short - Complete	1	1
4		See Chart	#4. Fork Assembly - Extra Short - Complete	1	1
5	A	See Chart	#5. Fork - Medium High - Complete	1	1
6	B	See Chart	#6. Fork - Medium Low - Complete	1	1
7	C	See Chart	#7. Fork - Short - Low - Complete	1	1
8	D	SP1584029-0601	Kit, Fork Extra Short, Low, Black	1	1

NOTE: A - Used with Item 1.
B - Used with Item 2.
C - Used with Item 3.
D - Used with Item 4.

Forks, Caster - Swing Away Frame

#1. Fork Assembly - Medium High - Complete

Fork Style	Medium High w/o Accent	Medium High, Blue Accent	Medium High, Purple Accent
Left Side	SP1583759-0005	SP1583759-0641	SP1583759-0642
Right Side	SP1586262-0005	SP1586262-0641	SP1586262-0642

#2. Fork Assembly - Medium Low - Complete

Fork Style	Medium Low w/o Accent	Medium Low, Blue Accent	Medium Low, Purple Accent
Left Side	SP1583757-0005	SP1583757-0641	SP1583757-0642
Right Side	SP1586259-0005	SP1586259-0641	SP1586259-0642

#3. Fork Assembly - Short - Complete

Fork Style	Short w/o Accent	Short, Blue Accent	Short, Purple Accent
Left Side	SP1583758-0005	SP1583758-0641	SP1583758-0642
Right Side	SP1586260-0005	SP1586260-0641	SP1586260-0642

#4. Fork Assembly - Extra Short - Complete

Fork Style	Extra Short w/o Accent	Extra Short, Blue Accent	Extra Short, Purple Accent
Left Side	SP1583761-0005	SP1583761-0641	SP1583761-0642
Right Side	SP1586270-0005	SP1586270-0641	SP1586270-0642

Forks, Caster - Swing Away Frame

#5. Fork - Medium High - Complete

Fork - Medium High w/o Accent	Fork - Medium High Blue Accent	Fork - Medium High Purple Accent
SP1584027-0005	SP1584027-0641	SP1584027-0642

#6. Fork - Medium Low - Complete

Medium Low w/o Accent	Medium Low Blue Accent	Medium Low Purple Accent
SP1584025-0005	SP1584025-0641	SP1584025-0642

#7. Fork - Short - Low - Complete

Short Low w/o Accent	Short Low Blue Accent	Short Low Purple Accent
SP1584026-0005	SP1584026-0641	SP1584026-0642

Fork Support, Swing Away Frame

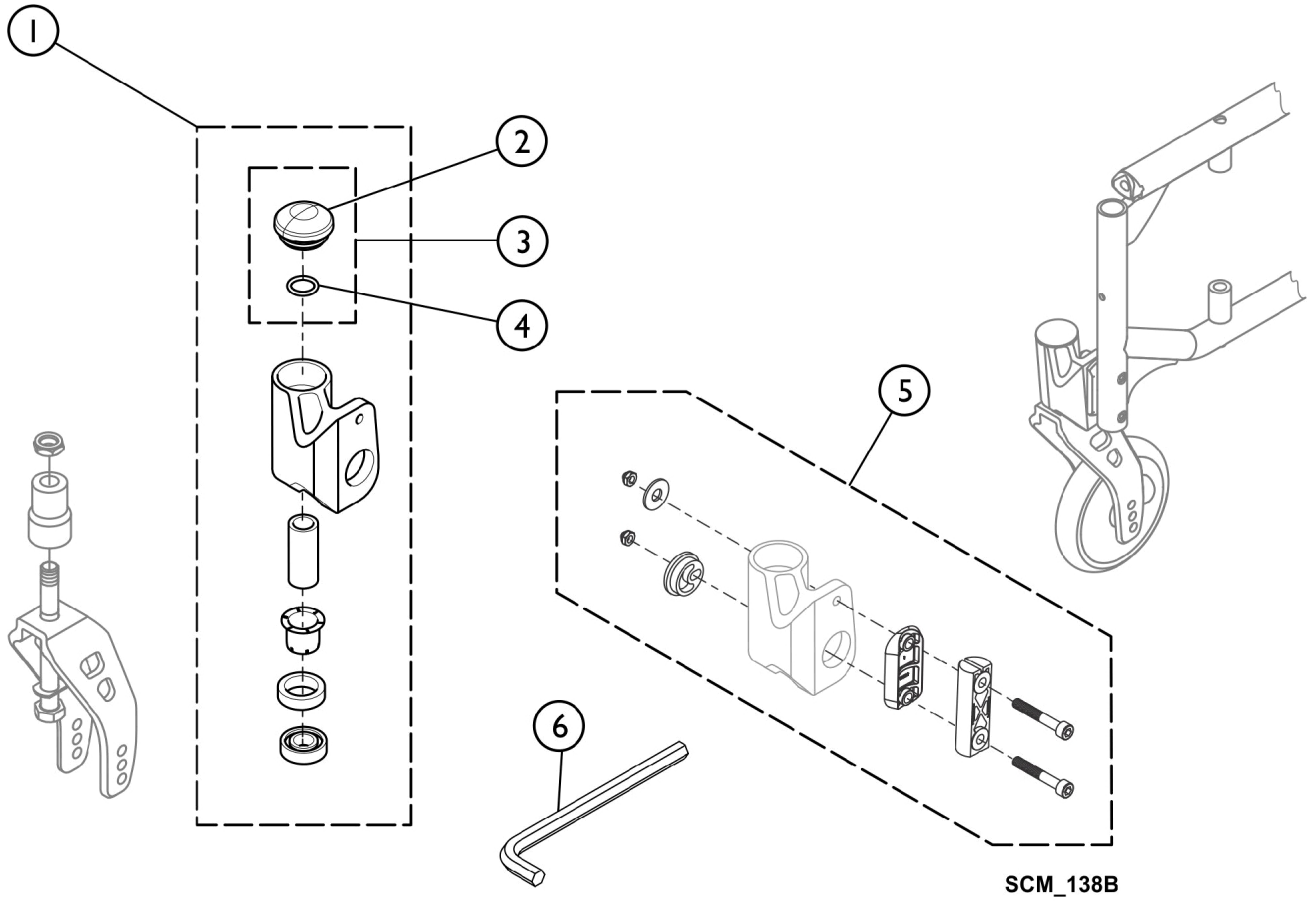

Fork Support, Swing Away Frame

Item Number	Note	Part Number	Description	Quantity Per	
				Package	Assembly
1	A	SP1584023-0005	Kit, Fork Support, w/o Accent, Swing Away Frame - Left	1	1
1	A	SP1586261-0005	Kit, Fork Support, w/o Accent, Swing Away Frame - Right	1	1
1	A	SP1584023-0641	Kit, Fork Support, Blue Accent, Swing Away Frame - Left	1	1
1	A	SP1586261-0641	Kit, Fork Support, Blue Accent, Swing Away Frame - Right	1	1
1	A	SP1584023-0642	Kit, Fork Support, Purple Accent, Swing Away Frame - Left	1	1
1	A	SP1586261-0642	Kit, Fork Support, Purple Accent, Swing Away Frame - Right	1	1
2		SP1589193	Caster Housing Cap, Black	1	1
3		SP1585342-0641	Caster Housing Cap, Blue Accent	1	1
4		SP1483872	O-Ring (15,6 x 2,4 NITRILE 70 SH)	1	1
5		SP1584024	Kit, Adjustment Fork Support, Swing Away Frame	1	1
6		SP1586506	Short Metric Hex Key (5 mm)	1	1

NOTE: A - Includes items 2, 3, 4, and 5.

Fork Support, Fixed Frame

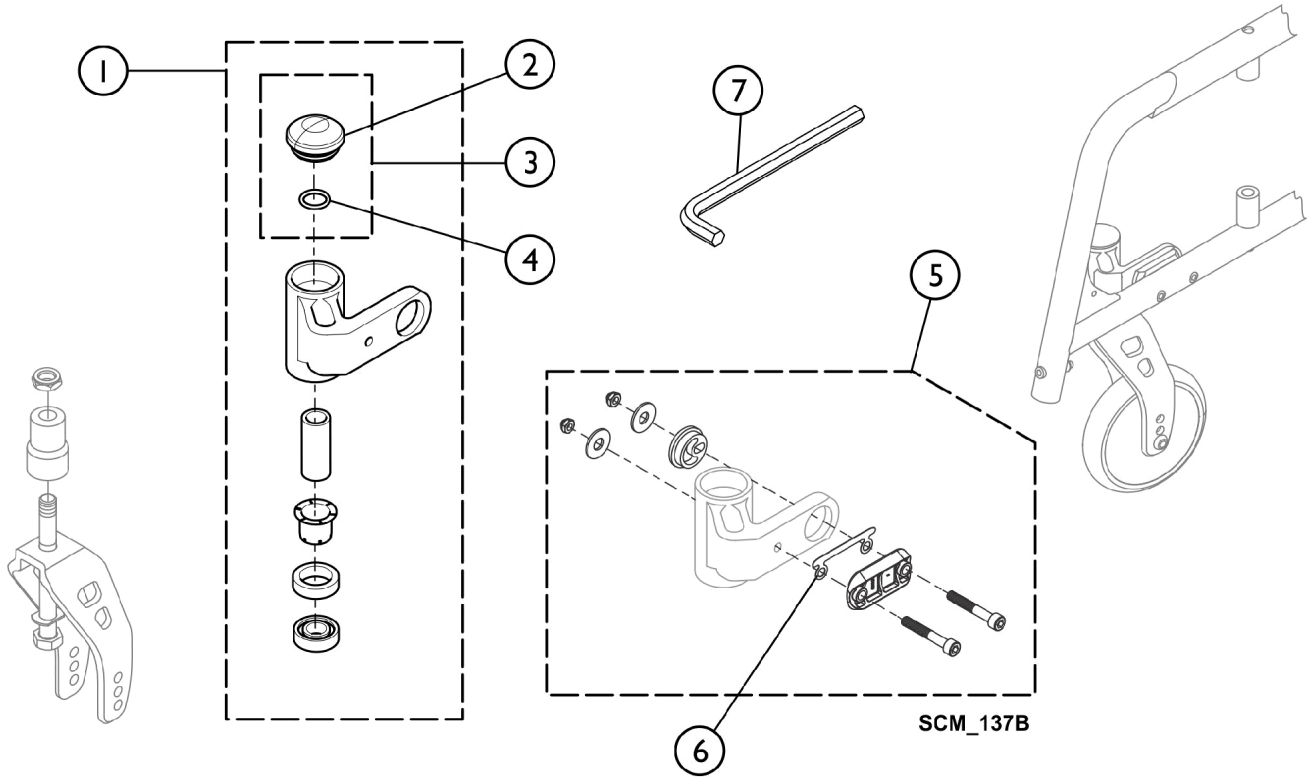

Fork Support, Fixed Frame

Item Number	Note	Part Number	Description	Quantity Per	
				Package	Assembly
1	A	SP1586271-0005	Kit, Fork Support, w/o Accent, Fixed Frame - Left	1	1
1	A	SP1586285-0005	Kit, Fork Support, w/o Accent, Fixed Frame - Right	1	1
1	A	SP1586271-0641	Kit, Fork Support, Blue Accent, Fixed Frame - Left	1	1
1	A	SP1586285-0641	Kit, Fork Support, Blue Accent, Fixed Frame - Right	1	1
1	A	SP1586271-0642	Kit, Fork Support, Purple Accent, Fixed Frame - Left	1	1
1	A	SP1586285-0642	Kit, Fork Support, Purple Accent, Fixed Frame - Right	1	1
2		SP1589193	Caster Housing Cap, Black	1	1
3		SP1585342-0641	Caster Housing Cap, Blue Accent	1	1
3		SP1585342-0642	Caster Housing Cap, Purple Accent	1	1
4		SP1483872	O-Ring (15,6 x 2,4 NITRILE 70 SH)	1	1
5		SP1586287	Kit, Adjustment Fork Support, Fixed Frame	1	1
6		SP1604465	Kit, Adjustment Part Front Wheel (Pair)	2	1
7		SP1586506	Short Metric Hex Key (5 mm)	1	1

NOTE: A - Includes items 2, 3, and 4.

Casters - Front

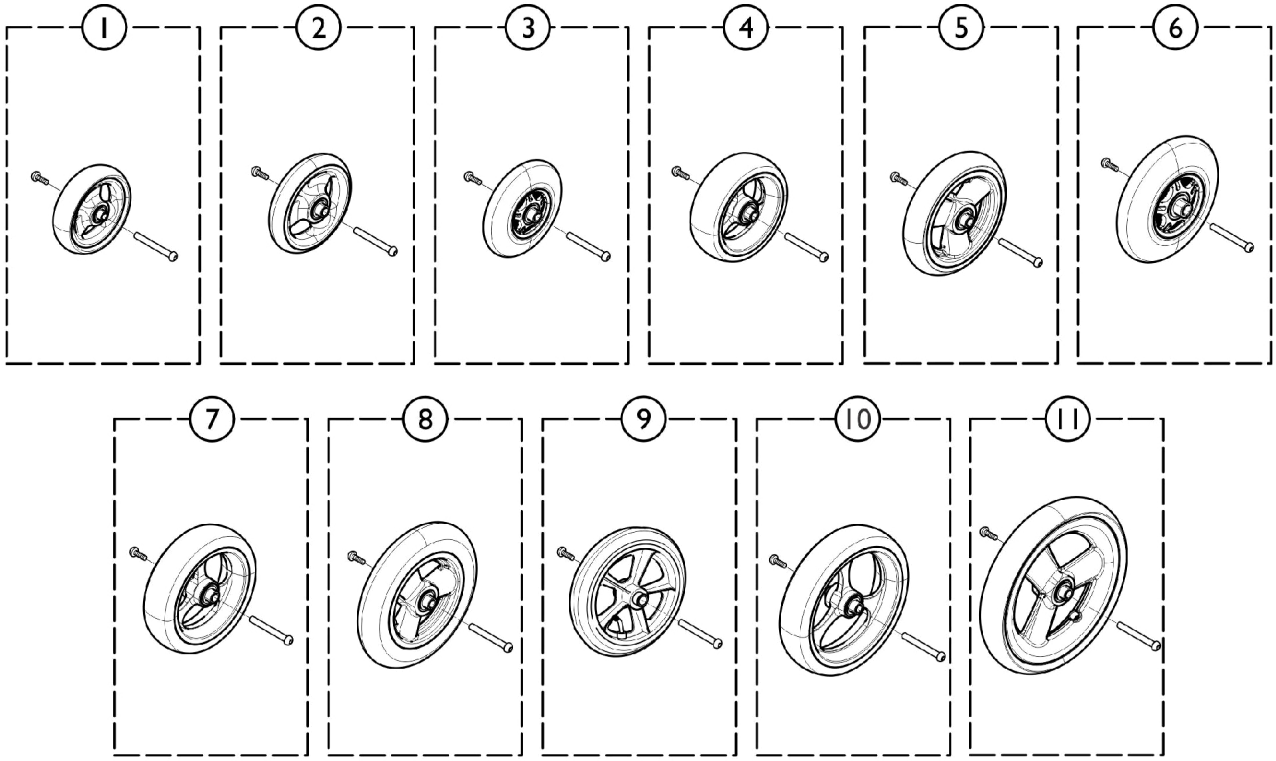

SCM_143A

Item Number	Note	Part Number	Description	Quantity Per Package	Quantity Per Assembly
1	A	SP1584356	Caster, Soft Roll (4") - 425COMSR	1	2
2	A	SP1584357	Caster, Solid (4" x 1") - 475COMUR	1	2
3	A	SP1584358	Caster, Solid Lights (4") - 4COMURLU	1	2
4	A	SP1584359	Caster, Aluminum Soft Roll (4") - 438ALUSR	1	2
5	A	SP1584354	Caster, Solid (5" x 1") - 5COMUR	1	2
6	A	SP1584355	Caster, Solid Lights (5") - 5COMURLU	1	2
7	A	SP1584360	Caster, Aluminum Soft Roll (5") - 538ALUSR	1	2
8	A	SP1584238	Caster, Solid (6" x 1") - 6COMUSR	1	2
9	A	SP1584239	Caster, Pneumatic (6" x 1") - 625COMP	1	2
10	A	SP1584361	Caster, Aluminum Soft Roll (6") - 638ALUSR	1	2
11	A	SP1584236	Caster, Solid (7" x 1") - 725COMSR	1	2

NOTE: A - Attaching Hardware is included with Casters and is not sold separately.

Wheels - Rear - Spoked (22CS, 24CS)

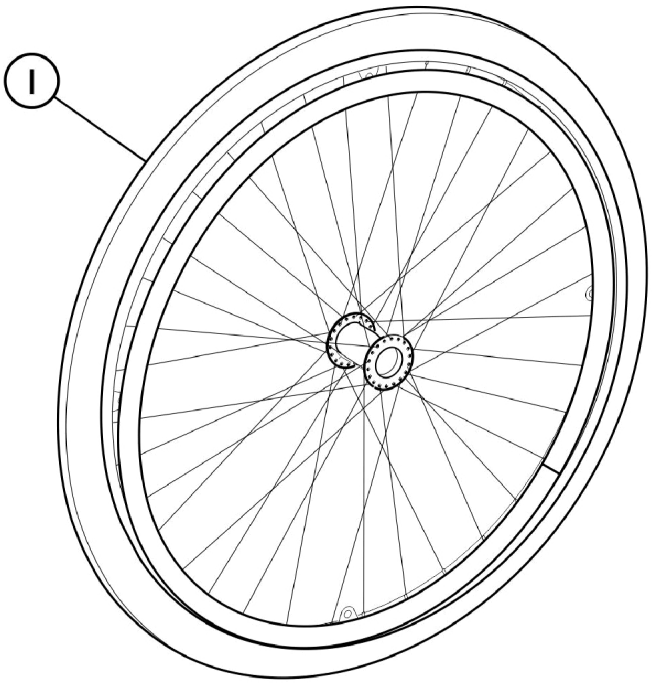

SCM_176A

#1. Wheels - Rear - Complete

Tire Type	22" Wheel Aluminum Handrim	24" Wheel Aluminum Handrim	22" Wheel Anti-Slip Handrim	24" Wheel Anti-Slip Handrim
Pneumatic HP (PNEUHP)	SP1588645	SP1588711	SP1588647	SP1588742
Pneumatic HD (PNEU38)	SP1498493	SP1498486	SP1498494	SP1498492
Solid HD (UR38)	SP1588643	SP1498467	SP1588644	SP1498478

Wheels - Rear - Composite (22COM, 24COM)

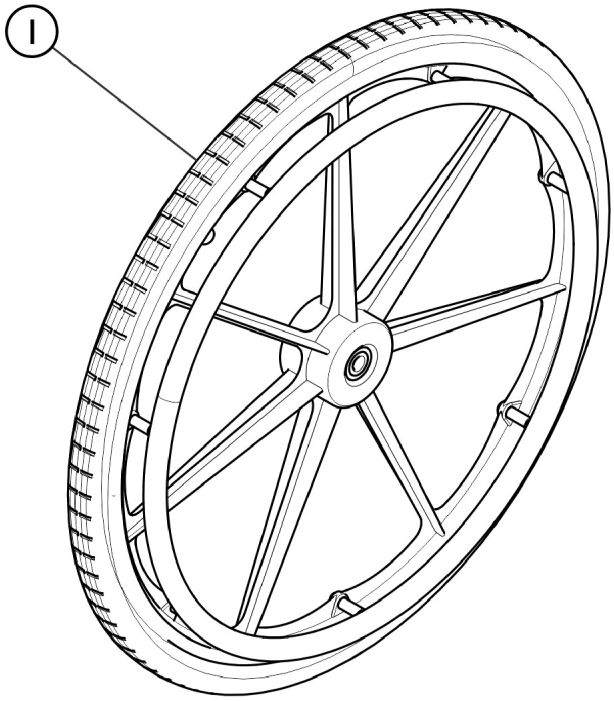

SCM_122A

#1. 22" Rear Wheel - Complete

22" Wheel Aluminum Handrim Pneumatic Tire (PNEU38)	22" Wheel Aluminum Handrim Solid Tire (UR38)	22" Wheel Aluminum Handrim Flat Free Tire (PNEUFF)	22" Wheel Anti-Slip Handrim Pneumatic Tire (PNEU38)	22" Wheel Anti-Slip Handrim Solid Tire (UR38)	22" Wheel Anti-Slip Handrim Flat Free Tire (PNEUFF)
SP1588902	SP1588900	SP1589156	SP1588903	SP1588901	SP1589157

#1. 24" Rear Wheel - Complete

24" Wheel Aluminum Handrim Pneumatic Tire (PNEU38)	24 Wheel Aluminum Handrim Solid Tire (UR38)	24" Wheel Aluminum Handrim Flat Free Tire (PNEUFF)	24" Wheel Anti-Slip Handrim Pneumatic Tire (PNEU38)	24" Wheel Anti-Slip Handrim Solid Tire (UR38)	24" Wheel Anti-Slip Handrim Flat Free Tire (PNEUFF)
SP1588906	SP1588904	SP1589158	SP1588923	SP1588905	SP1589159

Wheels - Rear - Lightweight (22LP, 24LP, 25LP)

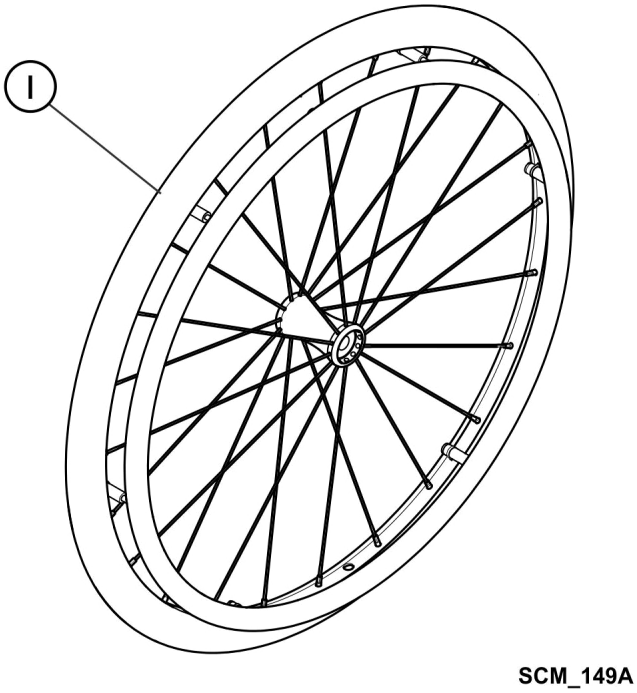

#1. Rear Wheel - Complete

Aluminum Handrim	22" Wheel	24" Wheel	25" Wheel
Pneumatic Tire (PNEU38)	SP1588890	SP1588752	N/A
Solid Tire (UR38)	SP1588888	SP1588750	N/A
Pneumatic HP Tire (PNEUHP)	SP1588896	SP1588754	SP1588746
Pneumatic EVO Tire (SMP)	N/A	SP1588756	SP1588748
Anti-Slip Handrim	22" Wheel	24" Wheel	25" Wheel
Pneumatic Tire (PNEU38)	SP1588895	SP1588755	N/A
Solid Tire (UR38)	SP1588889	SP1588751	N/A
Pneumatic HP Tire (PNEUHP)	SP1588897	SP1588753	SP1588747
Pneumatic EVO Tire (SMP)	N/A	SP1588887	SP1588749

Wheels - Rear - Spinergy (24SPOX, 25SPOX)

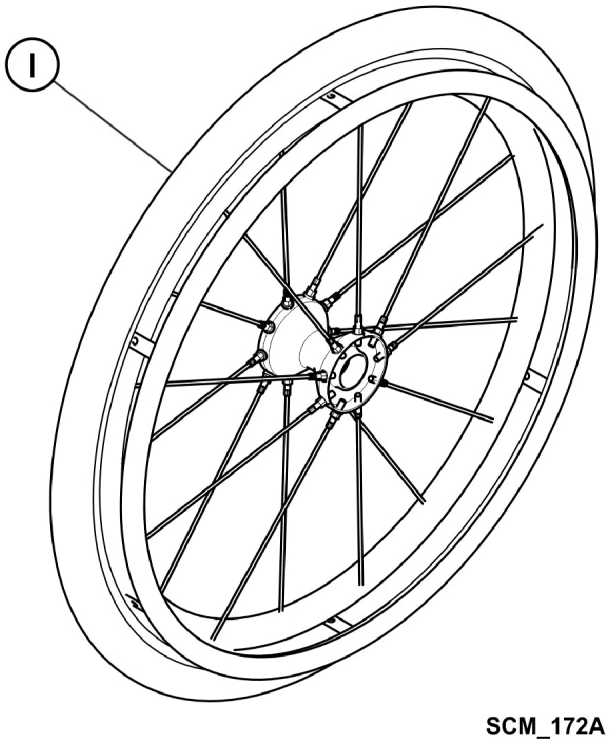

#1. Rear Wheel - Complete

Tire Type	24 - 25" Wheel Aluminum Handrim	24 - 25" Wheel Anti-Slip Handrim
Pneumatic HP (PNEUHP)	SP1588927	SP1588928
Pneumatic Evo (SMP)	SP1588929	SP1589149

Wheels - Rear - Hub Brake (22CS, 24CS)

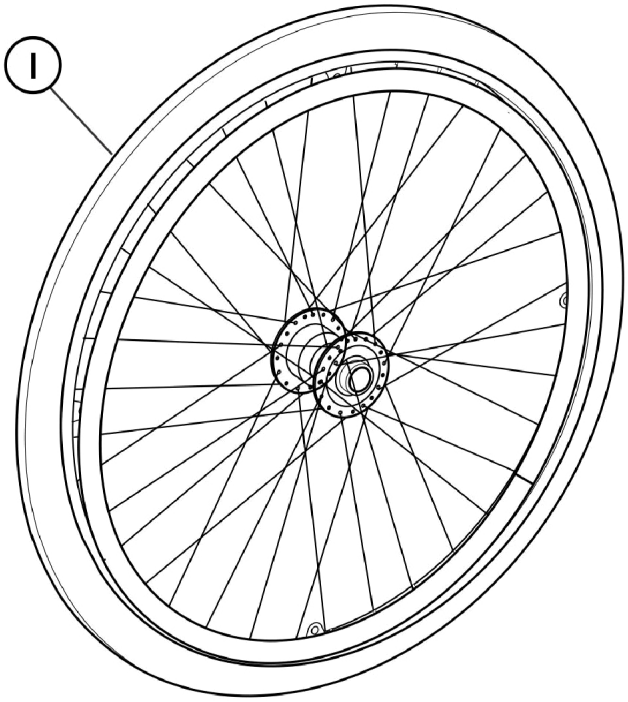

SCM_147A

#1. Hub Brake Rear Wheel - Complete

Tire Type	22" Wheel Aluminum Handrim	24" Wheel Aluminum Handrim	22" Wheel Anti-Slip Handrim	24" Wheel Anti-Slip Handrim
Pneumatic Tire (PNEU38)	SP1498466	SP1498428	SP1557823	SP1573481
Pneumatic HP Tire (PNEUHP)	SP1588646	SP1588712-NLA	SP1588648	SP1588743
Solid Tire (UR38)	SP1498461	SP1498427	SP1557801	SP1573482

Wheels - Rear - Service Parts - Standard and Hub Brake (CS)

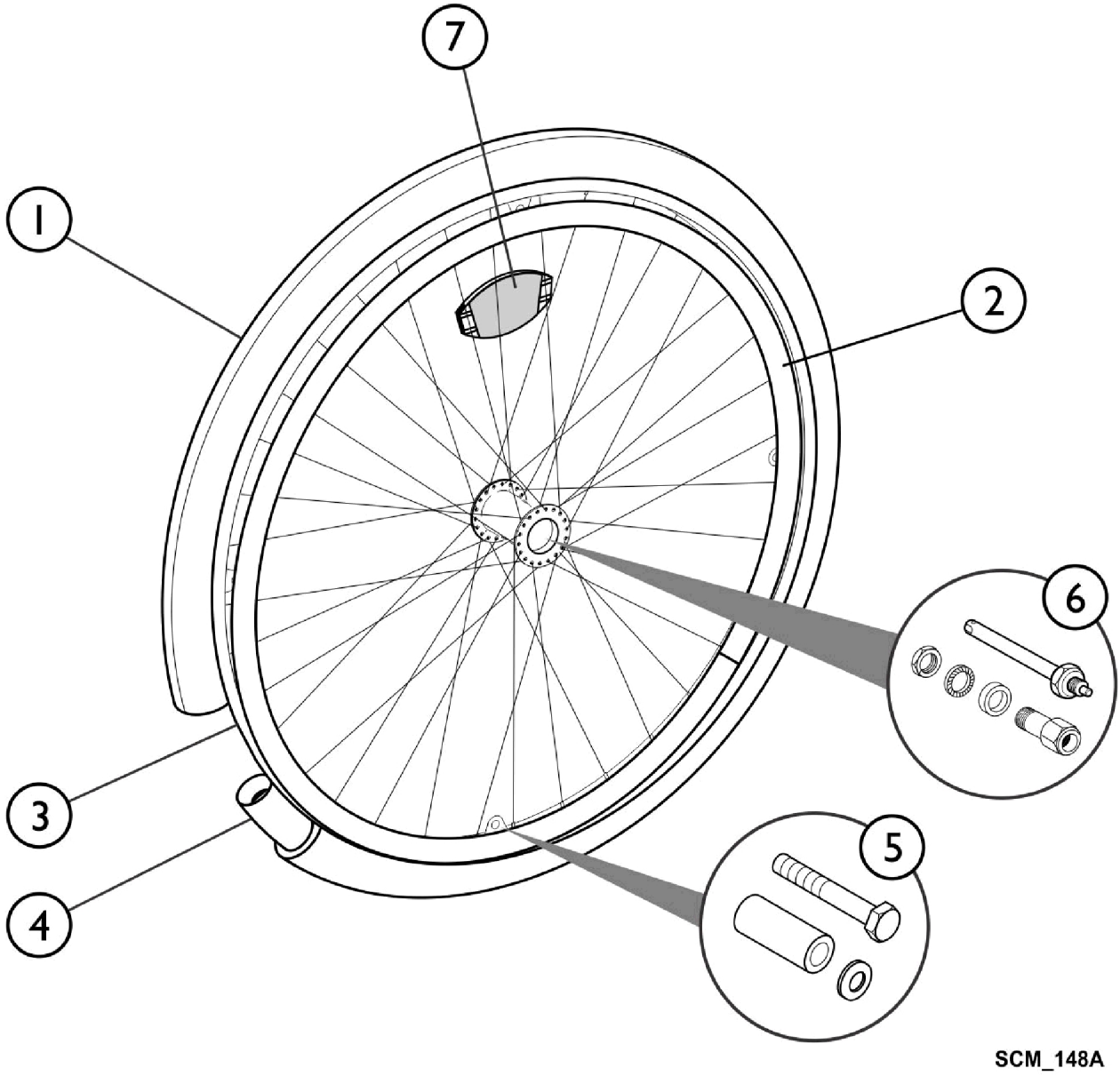

Wheels - Rear - Service Parts - Standard and Hub Brake (CS)

Item Number	Note	Part Number	Description	Quantity Per	
				Package	Assembly
1		SP1531456	Tire, Pneumatic Right Run Plus (22 x 1") (25-501)	1	1
1		SP0036-30035	Tire, Pneumatic, Grey (22" x 1-3/8")	1	1
1		SP0036-10014	Tire, Solid, Grey (22" x 1-3/8")	1	1
1		SP1585334	Tire, Pneumatic HP Grey and Black (24" x 1")	1	1
1		SP0036-30001	Tire, Pneumatic, Grey (24" x 1-3/8")	1	1
1		SP0036-10013	Tire, Solid, Grey (24" x 1-3/8")	1	1
2		SP1505299	Kit, Aluminum Handrim w/ Hardware (22")	1	1
2		SP1505920	Kit, Anti-Slip Handrim w/ Hardware (22")	1	1
2		SP1505291	Kit, Aluminum Handrim w/ Hardware (24")	1	1
2		SP1505298	Kit, Anti-Slip Handrim w/ Hardware (24")	1	1
3		SP5750029	Tape, Rim (22")	1	1
3		SP0036-40003	Tape, Rim (24")	1	1
4		SP1061214	Tube, Inner (Presta Valve, 22")	1	1
4		SP0036-20007	Tube, Inner (22" x 1-3/8")	1	1
4		SP1032240	Tube, Inner (24" x 1")	1	1
4		SP0036-20001	Tube, Inner (24" x 1-3/8")	1	1
5		SP1573626	Kit, Handrim Hardware, Spoked Wheel, 4 Point	1	1
6		SP1591280	Kit, Quick Release Axle	1	1
6		SP1591281	Kit, Quick Release Axle for Hub Brake	1	1
7		SPN90003	Kit, Reflector, Spoked Wheel	1	1

Wheels - Rear - Service Parts - Spinergy (SPOX)

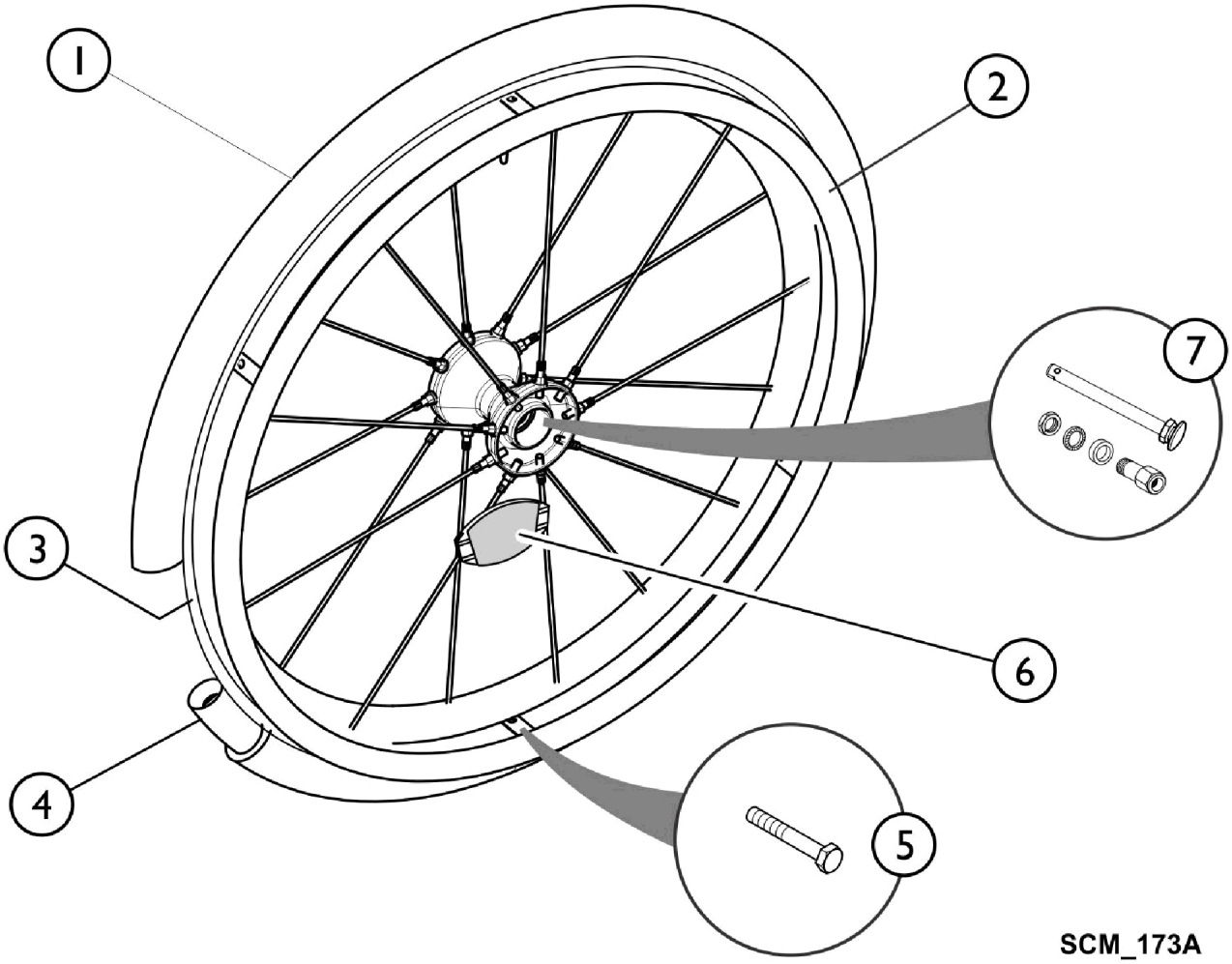

Wheels - Rear - Service Parts - Spinergy (SPOX)

Item Number	Note	Part Number	Description	Quantity Per	
				Package	Assembly
1		SP1585334	Tire, Pneumatic HP Grey and Black (24" x 1")	1	1
1		SP1585331	Tire, Pneumatic, Marathon w/ Evo (24" x 1")	1	1
1		SP1585335-NLA	NLA - Tire, Pneumatic Right Run Plus Grey and Black (25" x 1")	1	1
1		SP1585332	Tire, Pneumatic, Marathon w/ Evo (25" x 1")	1	1
2		SP1601468	Kit, Aluminum Handrim, 6 Position, Spinergy (24")	1	1
2		SP1601469	Kit, Anti-Slip Handrim, 6 Position Spinergy (24")	1	1
2		SP1601470	Kit, Aluminum Handrim, 6 Position, Spinergy (25")	1	1
3		SP0036-40003	Tape, Rim (24")	1	1
4		SP1032240	Tube, Inner (24" x 1")	1	1
4		SP1430886	Tube, Inner, High-Performance Wheel (25")	1	1
5		SP1601502	Kit, Handrim Hardware, Spinergy Wheel, 6pts	1	1
6		SPN90003	Kit, Reflector, Spoked Wheel	1	1
7		SP1603952-0005	Kit, Quick Release Axle w/ Silver Anodized Cap Wheel Spinergy	1	1
7		SP1603952-0641	Kit, Quick Release Axle w/ Blue Cap Wheel Spinergy	1	1
7		SP1603952-0642	Kit, Quick Release Axle w/ Purple Cap Wheel Spinergy	1	1

Wheels - Rear - Service Parts - Composite (COM)

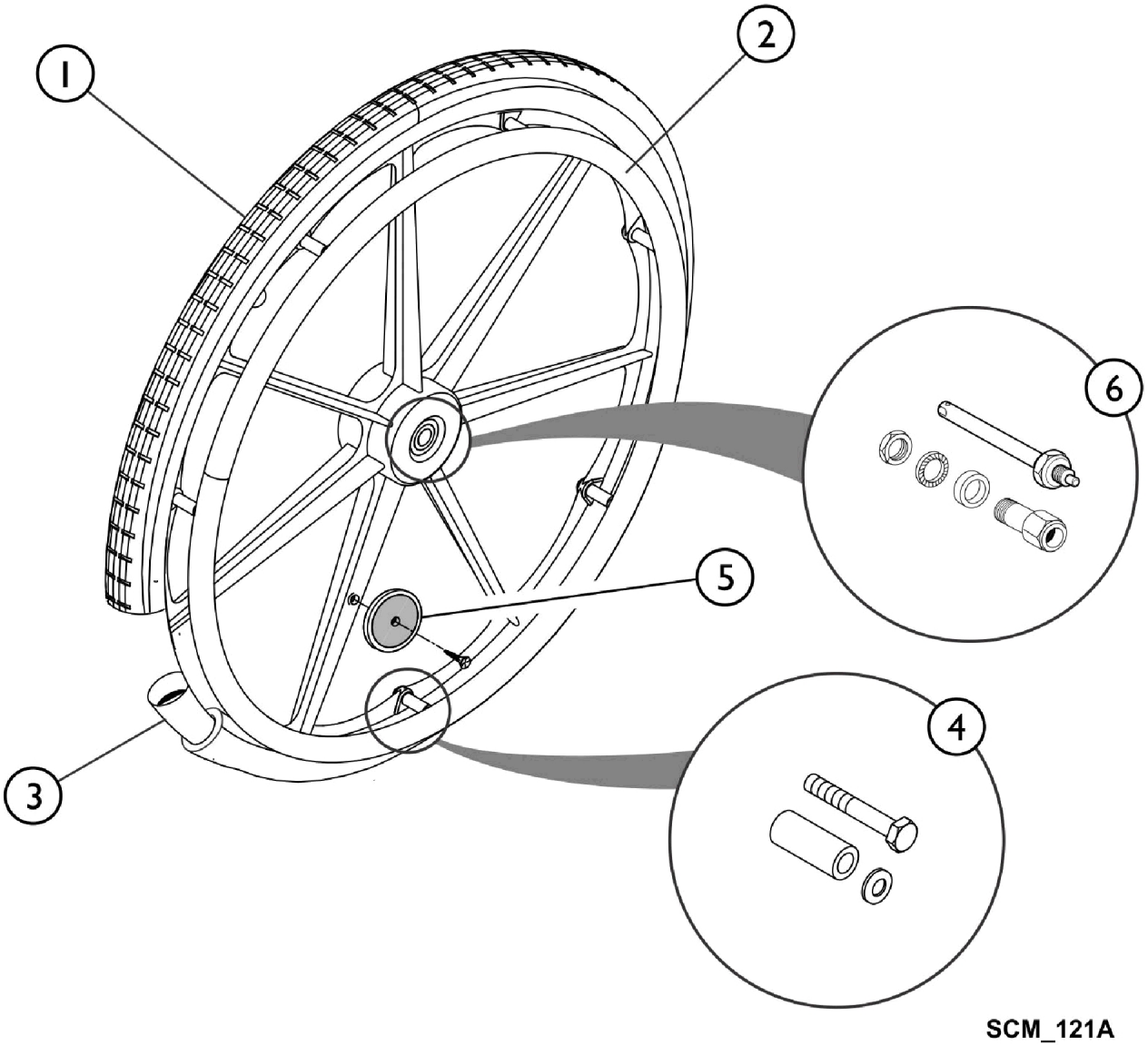

Wheels - Rear - Service Parts - Composite (COM)

Item Number	Note	Part Number	Description	Quantity Per	
				Package	Assembly
1		SP0036-30035	Tire, Pneumatic, Grey (22" x 1-3/8")	1	1
1		SP0036-10014	Tire, Solid, Grey (22" x 1-3/8")	1	1
1		SP0036-30001	Tire, Pneumatic, Grey (24" x 1-3/8")	1	1
1		SP0036-10013	Tire, Solid, Grey (24" x 1-3/8")	1	1
2		SP1604839	Kit, Aluminum Handrim, 7 Position, Composite Wheel (22")	1	1
2		SP1601840	Kit, Anti-Slip Handrim, 7 Position, Composite Wheel (22")	1	1
2		SP1601841	Kit, Aluminum Handrim , 7 Position, Composite Wheel (24")	1	1
2		SP1601842	Kit, Anti-Slip Handrim, 7 Position, Composite Wheel (24")	1	1
3		SP0036-20007	Tube, Inner (22" x 1-3/8")	1	1
3		SP0036-20001	Tube, Inner (24" x 1-3/8")	1	1
4		SP1601484	Kit, Handrim Hardware, Composite Wheel, 7 position	1	1
5		SP9037-30001	Kit, Reflector, Composite Wheel	1	1
6		SP1591280	Kit, Quick Release Axle	1	1

Wheels - Rear - Service Parts - Lightweight (LP)

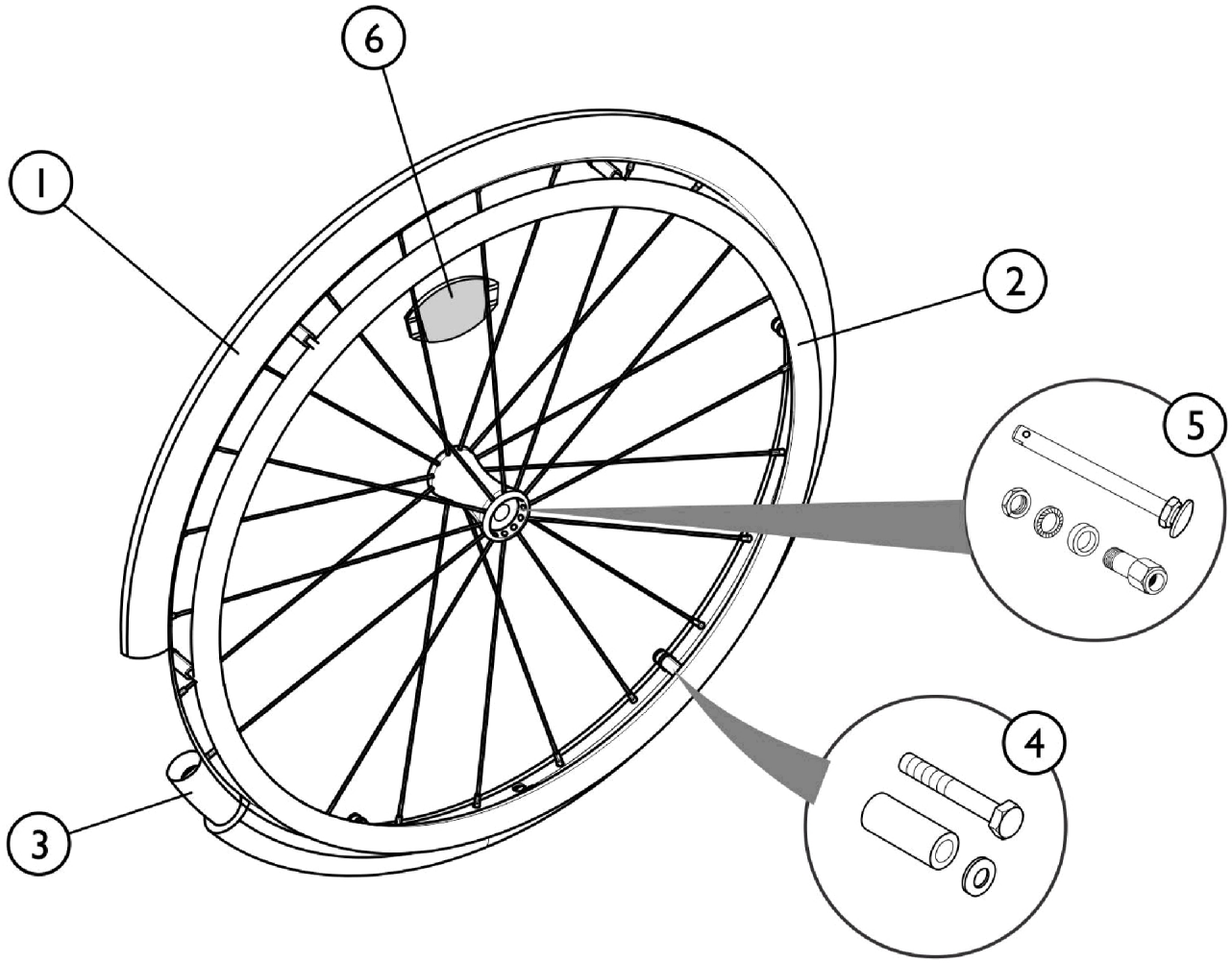

SCM_150A

Wheels - Rear - Service Parts - Lightweight (LP)

Item Number	Note	Part Number	Description	Quantity Per	
				Package	Assembly
1		SP0036-30035	Tire, Pneumatic, Grey (22" x 1-3/8")	1	1
1		SP0036-10014	Tire, Solid, Grey (22" x 1-3/8")	1	1
1		SP1585334	Tire, Pneumatic HP Grey and Black (24" x 1")	1	1
1		SP1585331	Tire, Pneumatic, Marathon w/ Evo (24" x 1")	1	1
1		SP0036-30001	Tire, Pneumatic, Grey (24" x 1-3/8")	1	1
1		SP0036-10013	Tire, Solid, Grey (24" x 1-3/8")	1	1
1		SP1585335-NLA	NLA - Tire, Pneumatic Right Run Plus Grey and Black (25" x 1")	1	1
1		SP1585332	Tire, Pneumatic, Marathon w/ Evo (25" x 1")	1	1
2		SP1601462	Kit, Aluminum Handrim, Lightweight, 6 Position (22")	1	1
2		SP1601463	Kit, Anti-Slip Handrim, Lightweight, 6 Position (22")	1	1
2		SP1601464	Kit, Aluminum Handrim, Lightweight, 6 Position (24")	1	1
2		SP1601465	Kit, Anti-Slip Handrim, Lightweight', 6 Position (24")	1	1
2		SP1601466	Kit, Aluminum Handrim, 6 Position, Lightweight (25")	1	1
2		SP1601467	Kit, Anti-Slip Handrim, 6 Position, Lightweight (25")	1	1
3		SP1061214	Tube, Inner (Presta Valve, 22")	1	1
3		SP0036-20007	Tube, Inner (22" x 1-3/8")	1	1
3		SP1032240	Tube, Inner (24" x 1")	1	1
3		SP0036-20001	Tube, Inner (24" x 1-3/8")	1	1
3		SP1430886	Tube, Inner, High-Performance Wheel (25")	1	1
4		SP1601472	Kit, Handrim Hardware, Lightweight Wheel, 6 Position	1	1
5		SP1601461-0005	Kit, Quick Release Axle w/ Grey Cap	1	1
5		SP1601461-0641	Kit, Quick Release Axle w/ Blue Cap	1	1
5		SP1601461-0642	Kit, Quick Release Axle w/ Purple Cap	1	1
6		SPN90003	Kit, Reflector, Spoked Wheel	1	1

Wheels - Rear - Supports

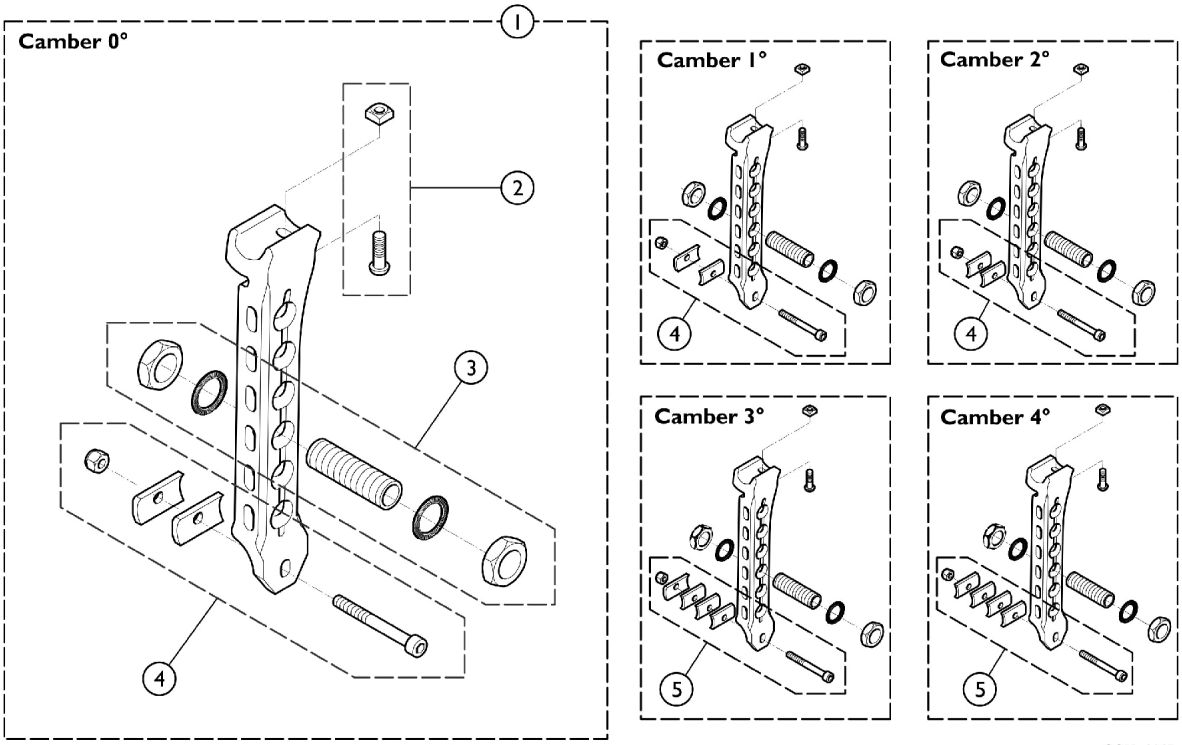

SCM_161B

Item Number	Note	Part Number	Description	Quantity Per	
				Package	Assembly
1	A	SP1554604-0005	Kit, Wheel Assembly, Rear Support w/o Accent - Left	1	1
1	A	SP1555921-0005	Kit, Wheel Assembly, Rear Support w/o Accent - Right	1	1
1	A	SP1554604-0641	Kit, Wheel Assembly, Rear Support, Blue Accent - Left	1	1
1	A	SP1555921-0641	Kit, Wheel Assembly, Rear Support, Blue Accent - Right	1	1
1	A	SP1554604-0642	Kit, Wheel Assembly, Rear Support, Purple Accent - Left	1	1
1	A	SP1555921-0642	Kit, Wheel Assembly, Rear Support, Purple Accent - Right	1	1
2		SP1601541	Kit, Hardware Wheel Assembly, Rear Support	1	1
3		SP1601542	Kit, Wheel Assembly, Rear Bearing	1	1
4		SP1584797	Kit, Camber, 0 - 2 Degree (Pair)	1	1
5		SP1584798	Kit, Camber, 3 - 4 Degree (Pair)	1	1

NOTE: A - Includes items 2, 3, 4, and 5.

Wheels - Rear - Supports - Twion

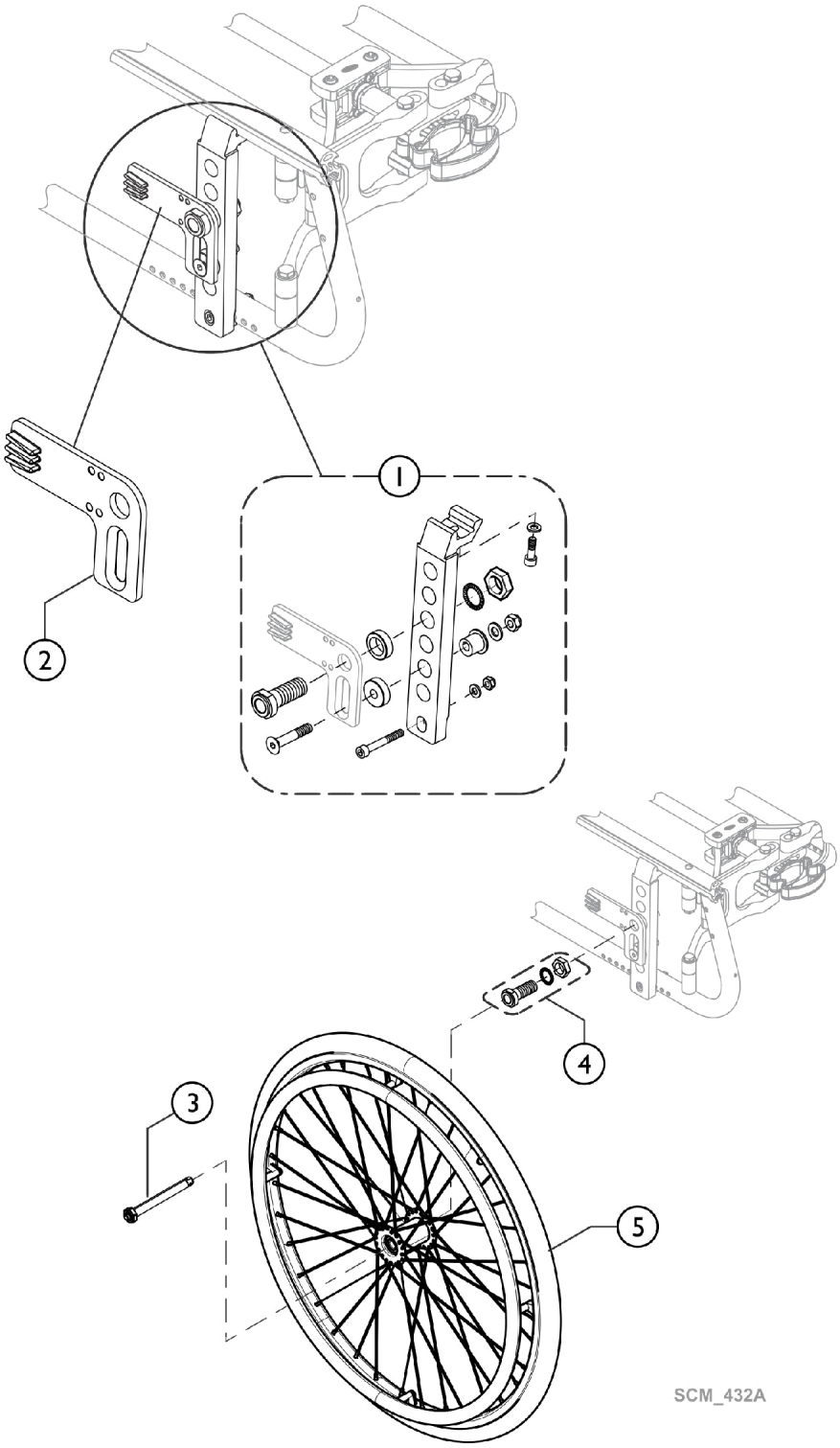

Wheels - Rear - Supports - Twion

Item Number	Note	Part Number	Description	Quantity Per	
				Package	Assembly
1		SP1566599	Kit, Twion, Bracket Set (Pair)	2	1
2		SP1565787	Kit, Torque receiver twion with angle (Pair)	2	1
3		SP1456261	Stub Axle 1/2, Le=104.05 Mm L=123.00 Mm	1	1
4		SP1463606	Kit, Axle Receiver 1/2. Length=50.8Mm Incl.	1	1
5		SP1641140	Rear Wheel 24" for 12.7 Mm Axle, Twion	1	1

Wheels - Rear - Spoke Protectors

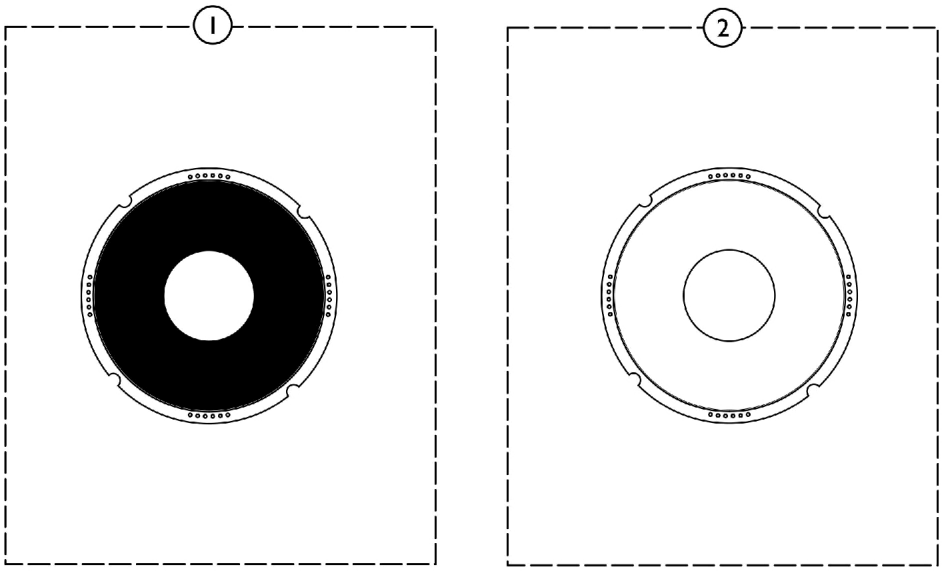

SCM_174A

Item Number	Note	Part Number	Description	Quantity Per	
				Package	Assembly
1		SP0789-04400	Spoke Guard, Black (24") (Pair)	1	1
2		SP1556990	Spoke Guard, Transparent (22") (Pair)	1	1

Wheel Locks - Push Brakes

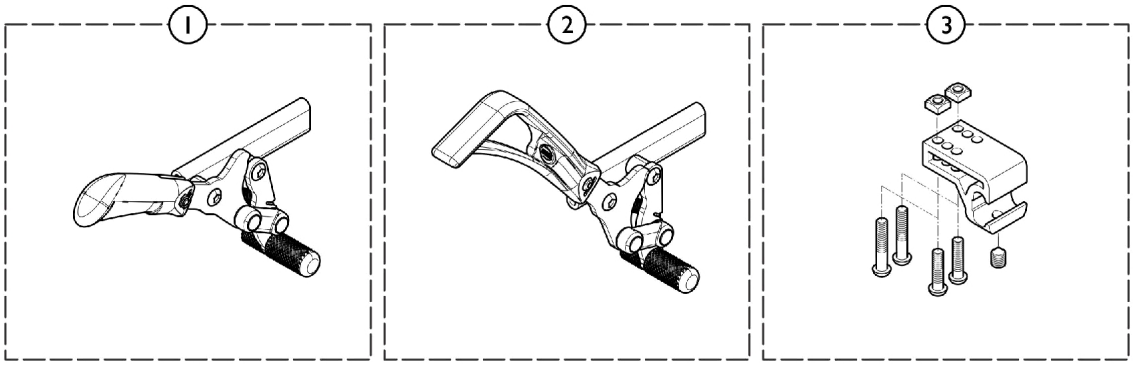

SCM_157A

Item Number	Note	Part Number	Description	Quantity Per	
				Package	Assembly
1		SP1581538	NLA - Push Brake - Left	1	1
1		SP1581537-NLA	NLA - Push Brake - Right	1	1
2		SP1581546	Push Brake, Extension Handle - Left	1	1
2		SP1581545	Push Brake, Extension Handle - Right	1	1
3		SP1589978-NLA	NLA - Kit, Brakes, Clamp	1	1

Wheel Locks - Pull Brakes

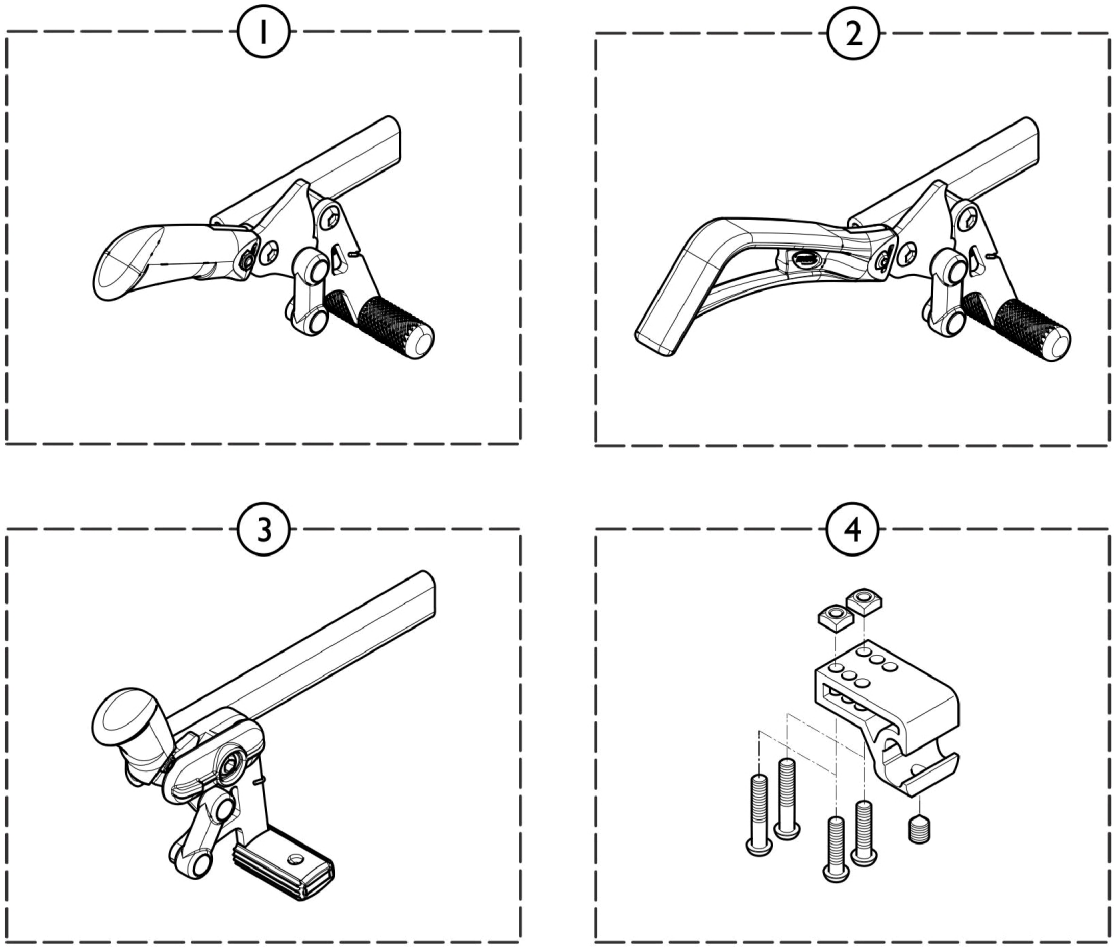

SCM_156A

Item Number	Note	Part Number	Description	Quantity Per	
				Package	Assembly
1		SP1581534	Pull Brake - Left	1	1
1		SP1581533	Pull Brake - Right	1	1
2		SP1581542	Pull Brake, Extension Handle - Left	1	1
2		SP1581541	Pull Brake, Extension Handle - Right	1	1
3		SP1559151	Pull Brake Long Support - Left	1	1
3		SP1559150	Pull Brake Long Support - Right	1	1
4		SP1589978-NLA	NLA - Kit, Brakes, Clamp	1	1

Wheel Locks - Attendant Operated, Hub Brake

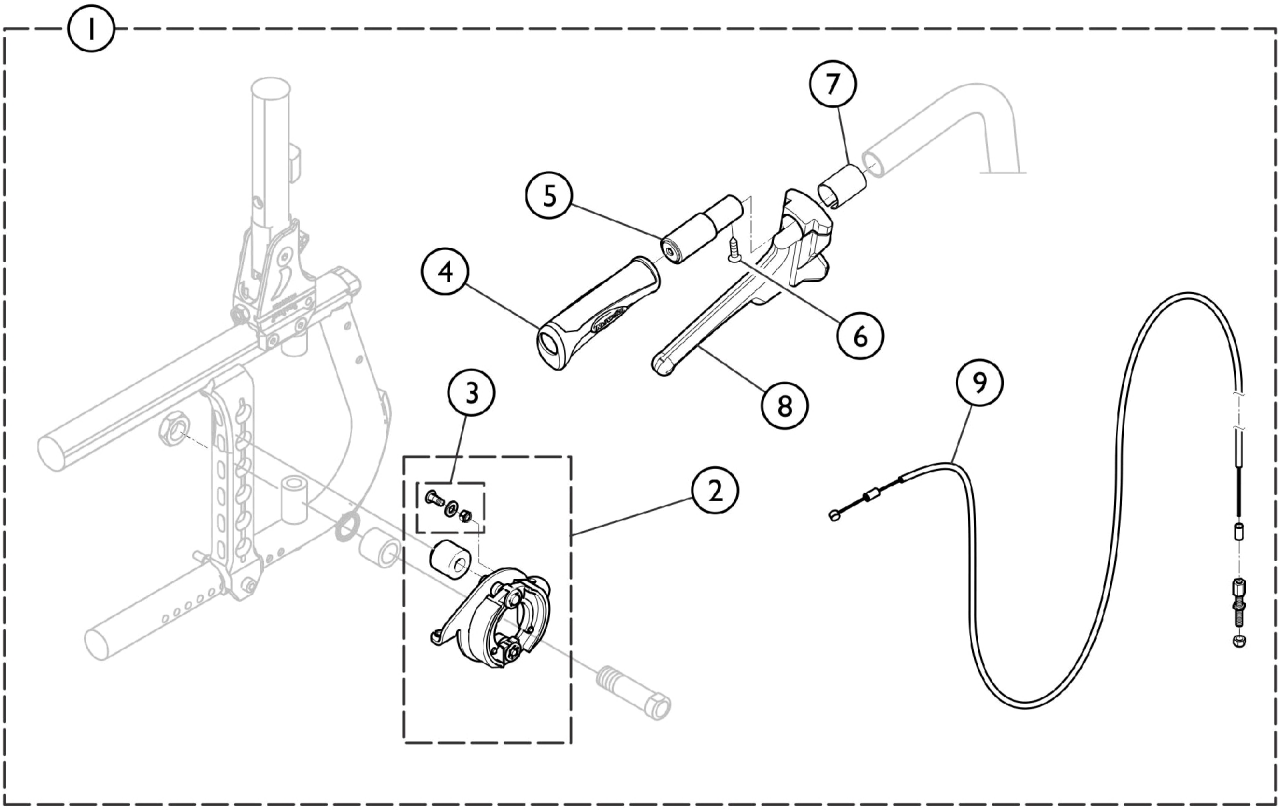

SCM_146A

Item Number	Note	Part Number	Description	Quantity Per	
				Package	Assembly
1		SP1601543	Kit, Attendant Hub Brake, Complete (w/o Wheels)	1	1
2		SP1601544	Kit, Hub Brake Plate w/ Spacer - Left	1	1
2		SP1601545	Kit, Hub Brake Plate w/ Spacer - Right	1	1
3		SPM30071	Cable Clamp Bolt w/ Nut and Washer	1	1
4		SP1425473	Handle, Back Cane (7/8)	1	1
5		SP1425530	Insert, Push Handle	1	1
6		SP1428603	Screw Tfb (4,8 x 19 A2r Tx25 DIN7983)	1	1
7		SP5221363	Hub Brake Adaptation, Back Cane, Fixed	1	1
8		SP1420527	Lever, Brake, Black (7/8 Dia.)	1	1
9		SP1564821	Attendant Hub Brakes, Complete Mechanism (Pair)	1	1

Accessories - Anti-Tippers

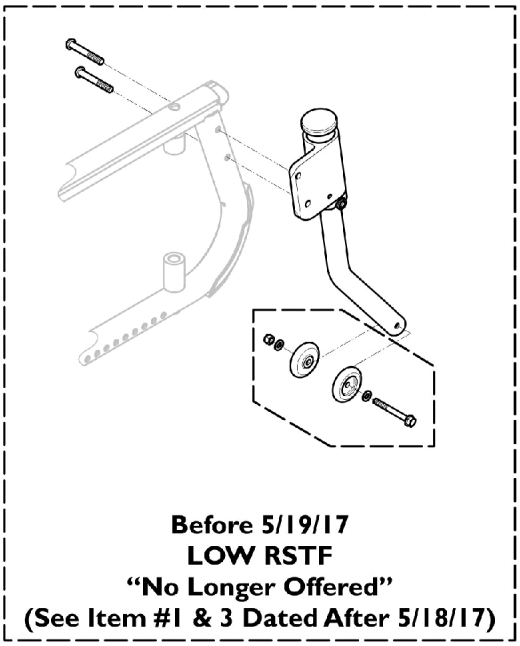

Before 5/19/17
LOW RSTF
"No Longer Offered"
(See Item #1 & 3 Dated After 5/18/17)

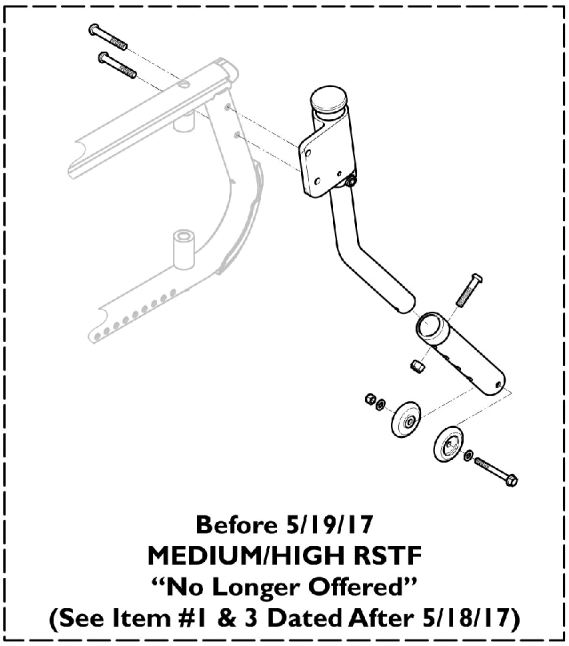

Before 5/19/17
MEDIUM/HIGH RSTF
"No Longer Offered"
(See Item #1 & 3 Dated After 5/18/17)

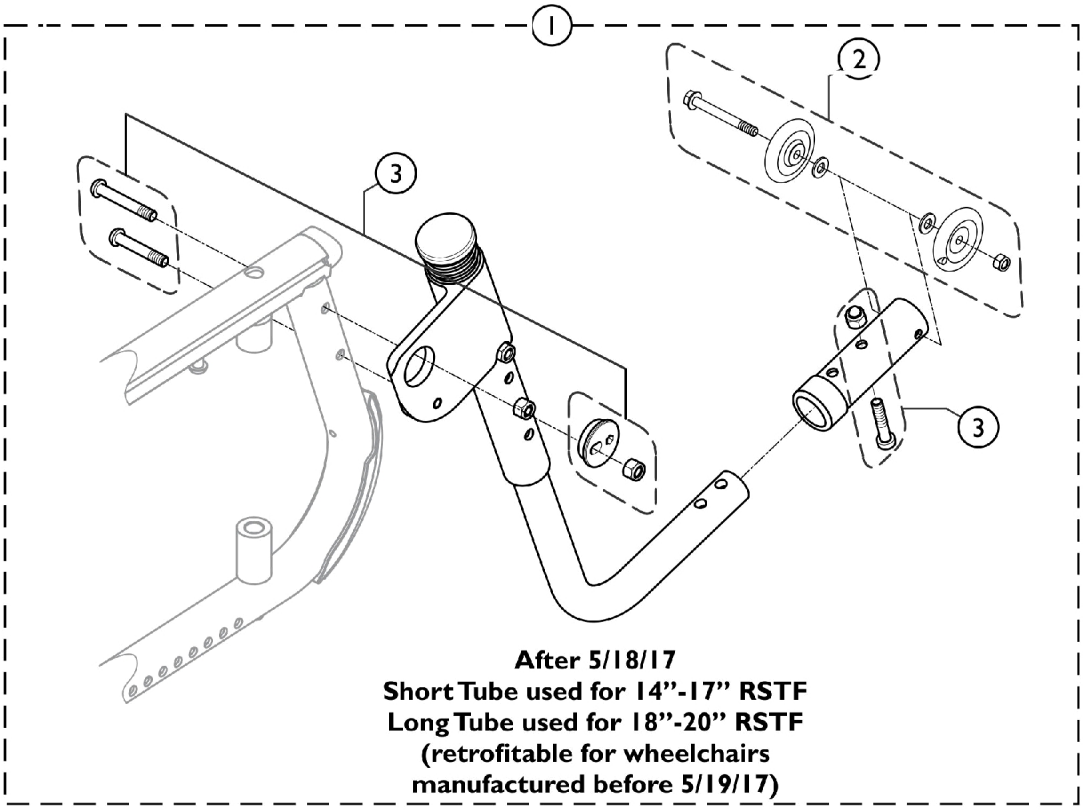

After 5/18/17
Short Tube used for 14"-17" RSTF
Long Tube used for 18"-20" RSTF
(retrofitable for wheelchairs
manufactured before 5/19/17)

SCM_160B

Accessories - Anti-Tippers

Item Number	Note	Part Number	Description	Quantity Per	
				Package	Assembly
1	A,B,C	SP1607127	Kit, Anti-tipper, Active, Angle Adjustable, Short tube, Rear Seat Height (14-17") - Left	1	1
1	A,B,C	SP1607128	Kit, Anti-tipper, Active, Angle Adjustable, Short tube, Rear Seat Height (14-17") - Right	1	1
1	A,B,D	SP1607180	Kit, Anti-tipper, Active, Angle Adjustable, Long tube, Rear Seat Height (18-20") - Left	1	1
1	A,B,D	SP1607181	Kit, Anti-tipper, Active, Angle Adjustable, Long tube, Rear Seat Height (18-20") - Right	1	1
2		SP1548802	Kit, Wheels w/ Hardware, Anti-Tippers (Washers Out)	1	1
3		SP1607192	Kit, Hardware, Anti-tipper	1	1

NOTE:
A - Includes Anti-Tipper with items 2 and 3.
B - Whether your wheelchair is already equipped with a different design that is shown, it is recommended to order both Right and Left side Anti-Tipper Assembly Kits and item #3 (2 ea.) Anti-Tipper Hardware to match.
C - Replaced Anti-Tippers manufactured Before 5/19/17 that used Rear Seat to Floor setting LOW 14-15" RSTF and MEDIUM 16-17" RSTF
D - Replaced Anti-Tippers manufactured Before 5/19/17 that used Rear Seat to Floor setting MEDIUM 18" RSTF and HIGH 19-20" RSTF

Accessories - Calf Strap

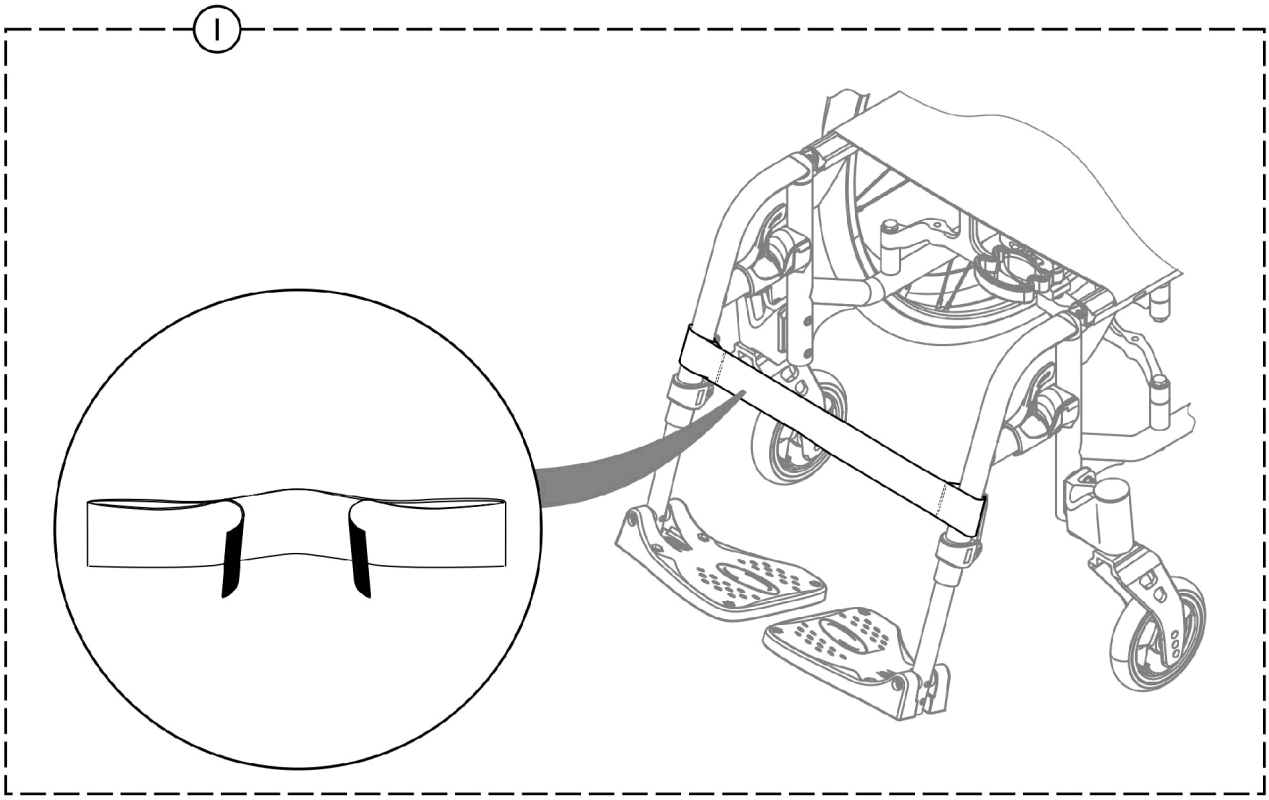

SCM_117A

Item Number	Note	Part Number	Description	Quantity Per	
				Package	Assembly
1		SP0572-05794	Calf Strap Adjustable, Small, (12-16" W)	1	1
1		SP1433580	Calf Strap Adjustable, Medium (17-19" W)	1	1
1		SP1497574	Calf Strap Adjustable, Large, (20-24" W)	1	1

Accessories - Cane/Crutch Holder

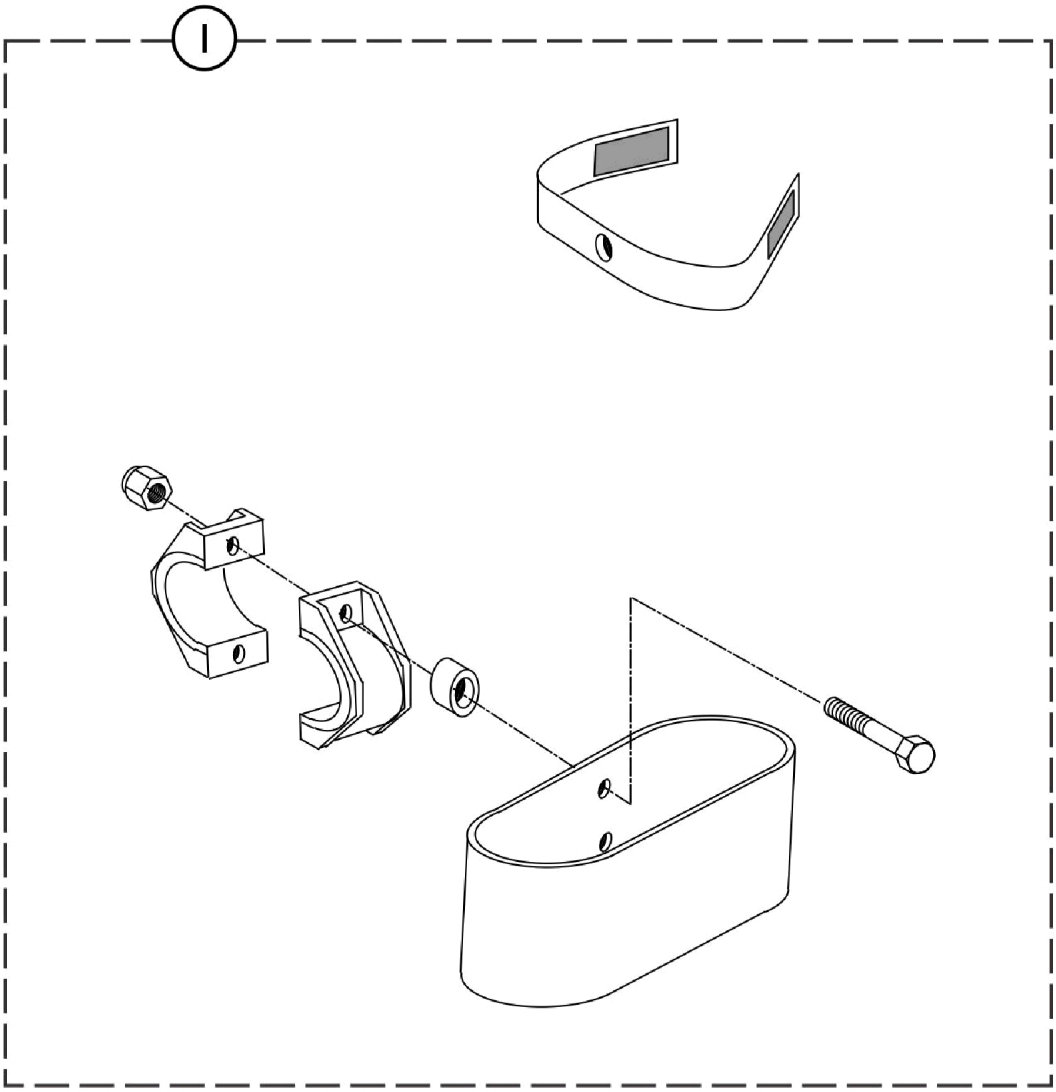

SCM_118A

Item Number	Note	Part Number	Description	Quantity Per	
				Package	Assembly
1		SP0572-02056	Cane Holder	1	1

Accessories - Heel Strap w/ Hardware

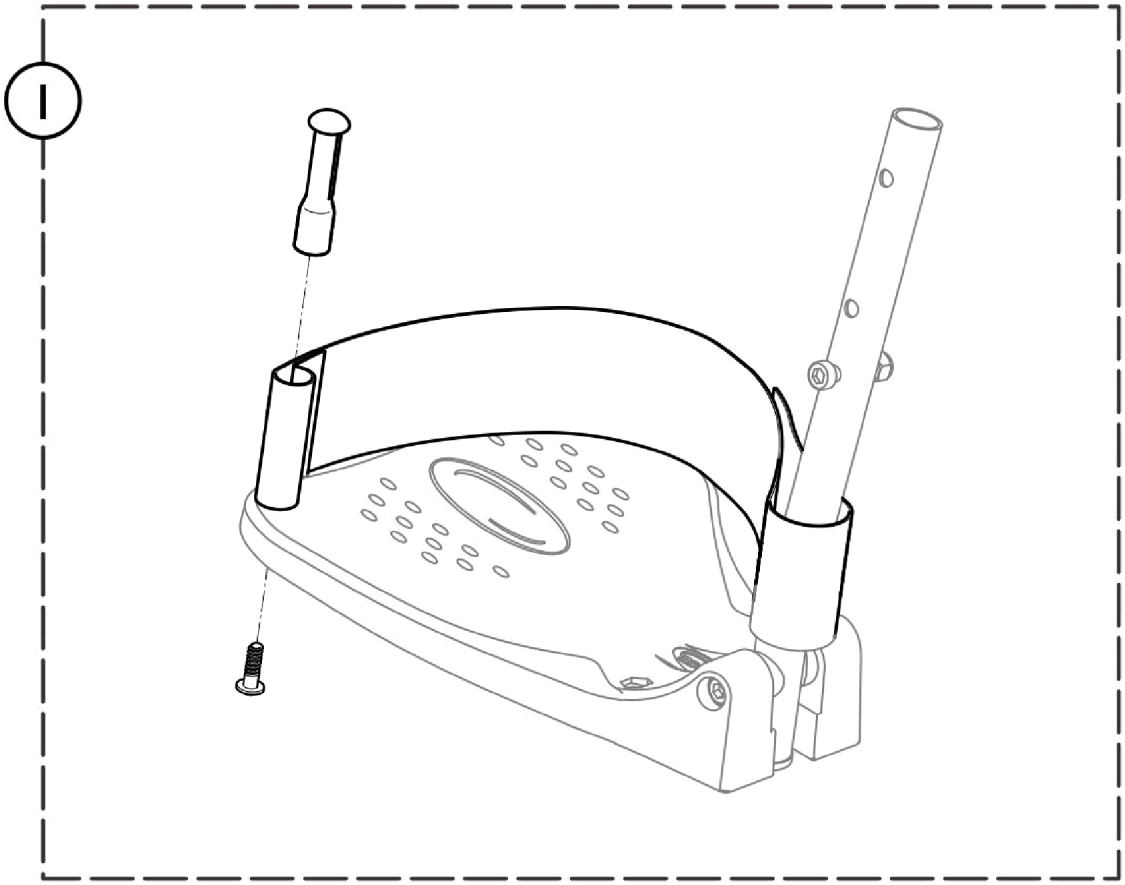

SCM_145A

Item Number	Note	Part Number	Description	Quantity Per	
				Package	Assembly
1		SP0587-05201	Kit, Heel Strap, Adjustable, Small	1	1
1		SP1492315	Kit, Heel Strap, Adjustable, Medium	1	1

Accessories - Folding Backbrace

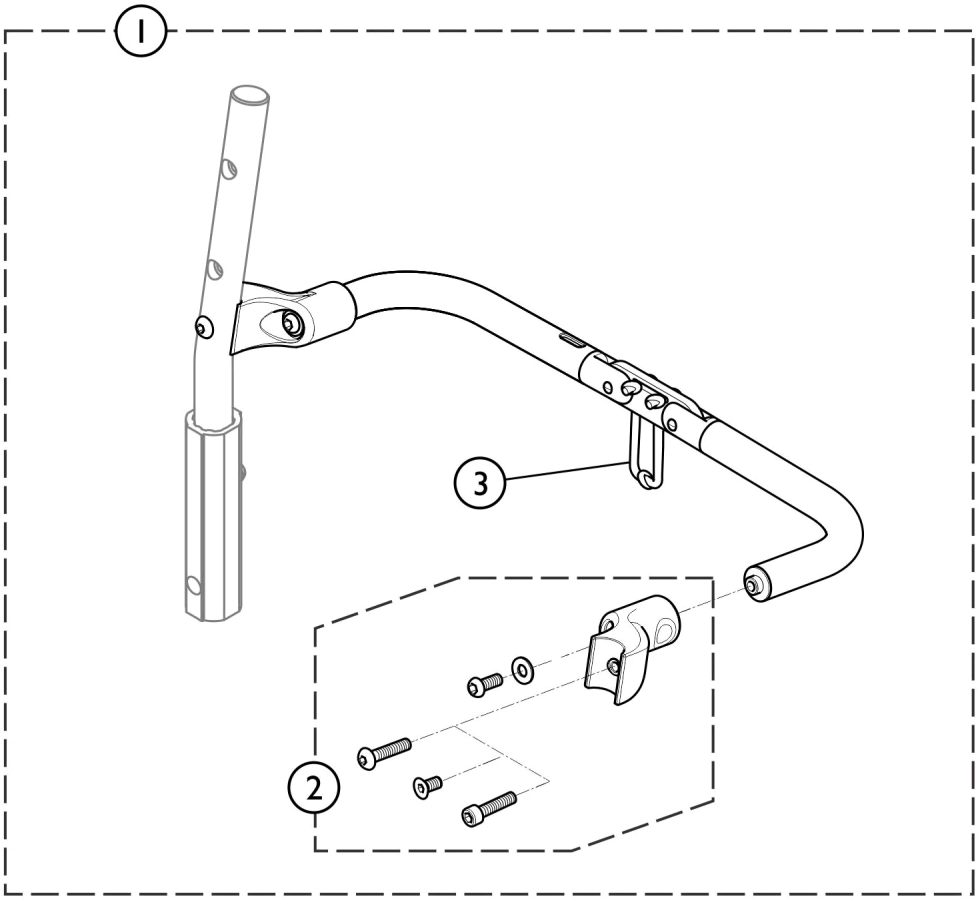

SCM_111A

Item Number	Note	Part Number	Description	Quantity Per	
				Package	Assembly
1		SP1583662	Kit, Folding Backbrace, (12" W)	1	1
1		SP1583663	Kit, Folding Backbrace, (13" W)	1	1
1		SP1583664	Kit, Folding Backbrace, (14" W)	1	1
1		SP1583665	Kit, Folding Backbrace, (15" W)	1	1
1		SP1583666	Kit, Folding Backbrace, (16" W)	1	1
1		SP1583667	Kit, Folding Backbrace, (17" W)	1	1
1		SP1583668	Kit, Folding Backbrace, (18" W)	1	1
1		SP1583669	Kit, Folding Backbrace, (19" W)	1	1
1		SP1583724	Kit, Folding Backbrace, (20" W)	1	1
1		SP1583725	Kit, Folding Backbrace, (21" W)	1	1
2		SP1589801	Kit, Hardware, Backbrace (Pair)	1	1
3		SP1601900	Cord, Backbrace and Angle or Fold Down Backrest Attachment	1	1

Accessories - Luggage Holder

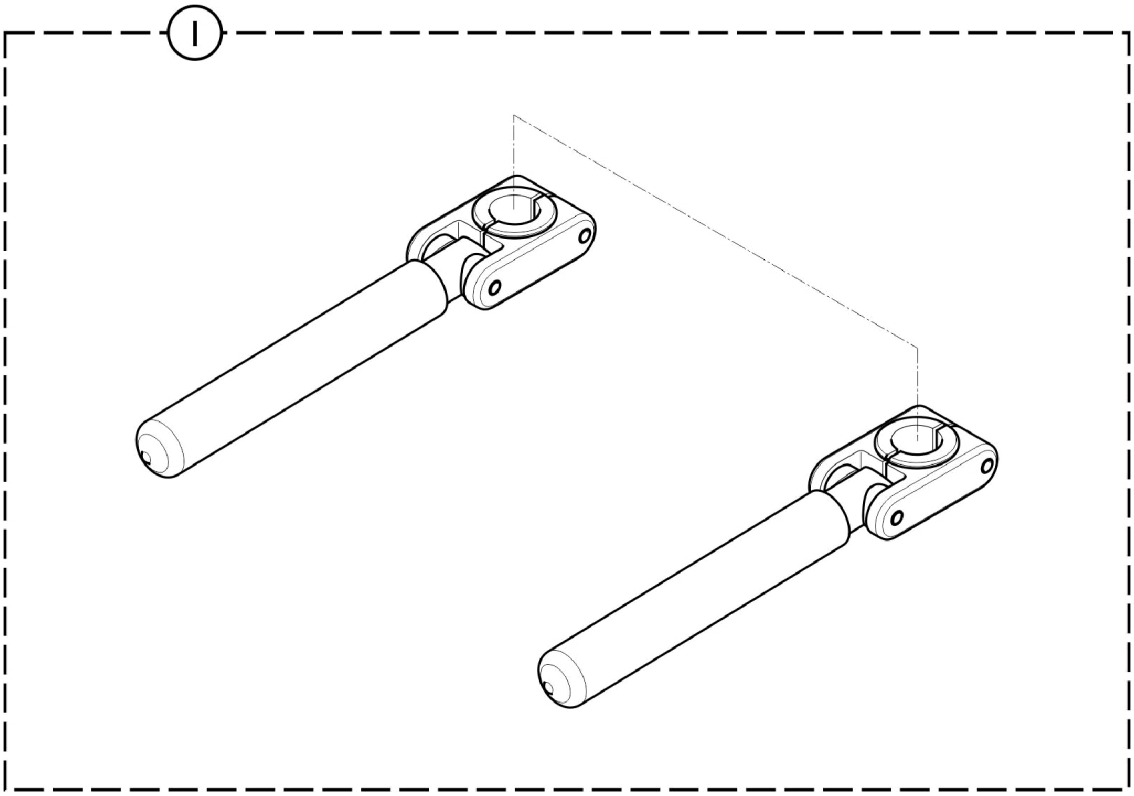

SCM_119A

Item Number	Note	Part Number	Description	Quantity Per	
				Package	Assembly
1		SP1587821	Luggage Holder (Pair)	1	1

Accessories - Pumps

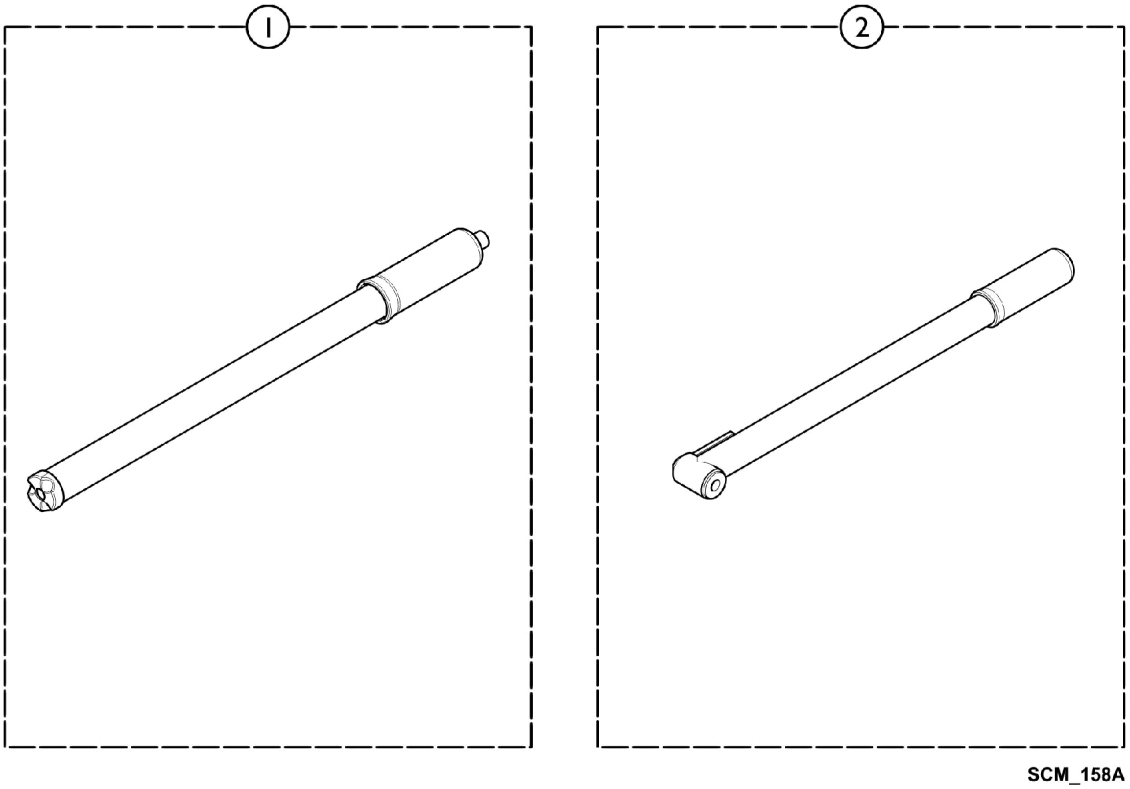

Item Number	Note	Part Number	Description	Quantity Per	
				Package	Assembly
1		SP1590818	Pump - Low Pressure	1	1
1		SP1590819	Pump - High Pressure	1	1

Accessories - Reflectors - Rear Wheels

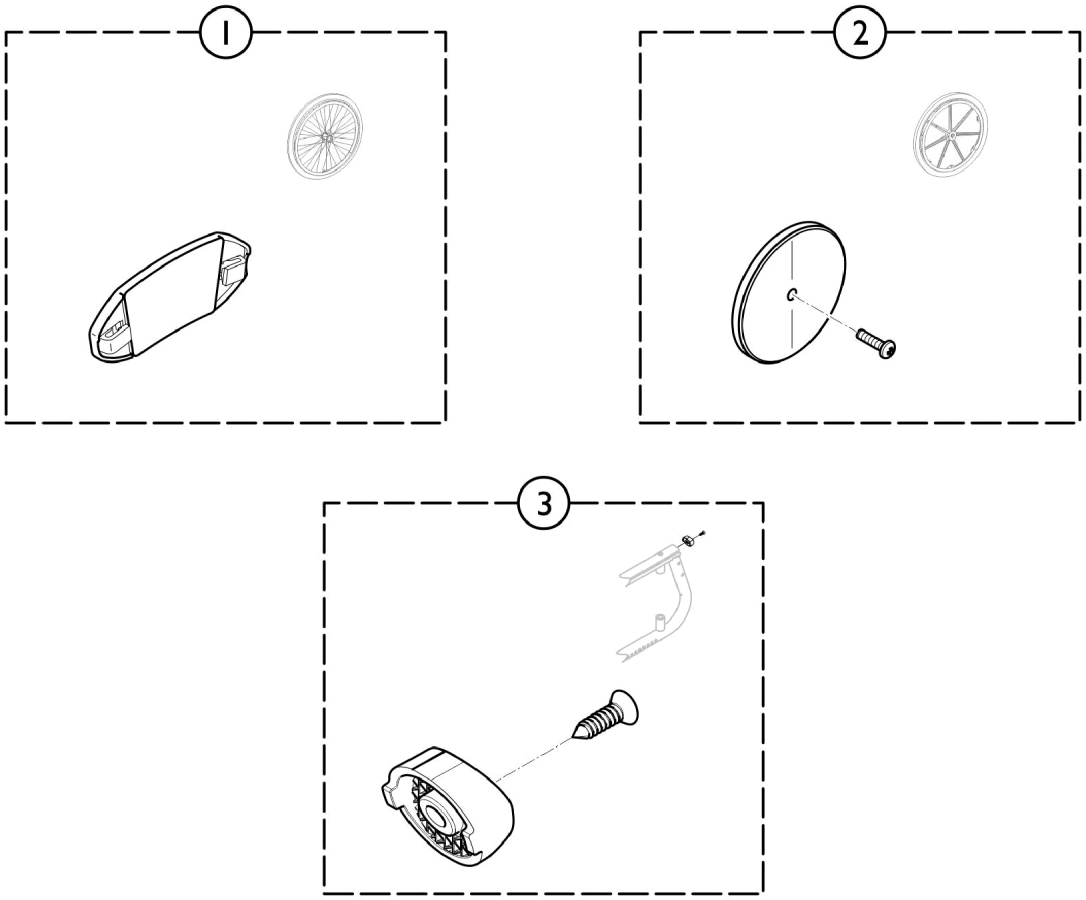

Item Number	Note	Part Number	Description	Quantity Per	
				Package	Assembly
1		SPN90003	Kit, Reflector, Spoked Wheel	1	1
2		SP9037-30001	Kit, Reflector, Composite Wheel	1	1
3		SP1589683	Kit, Rear Cap Reflector, Frame	1	1

Accessories - Seat Positioning

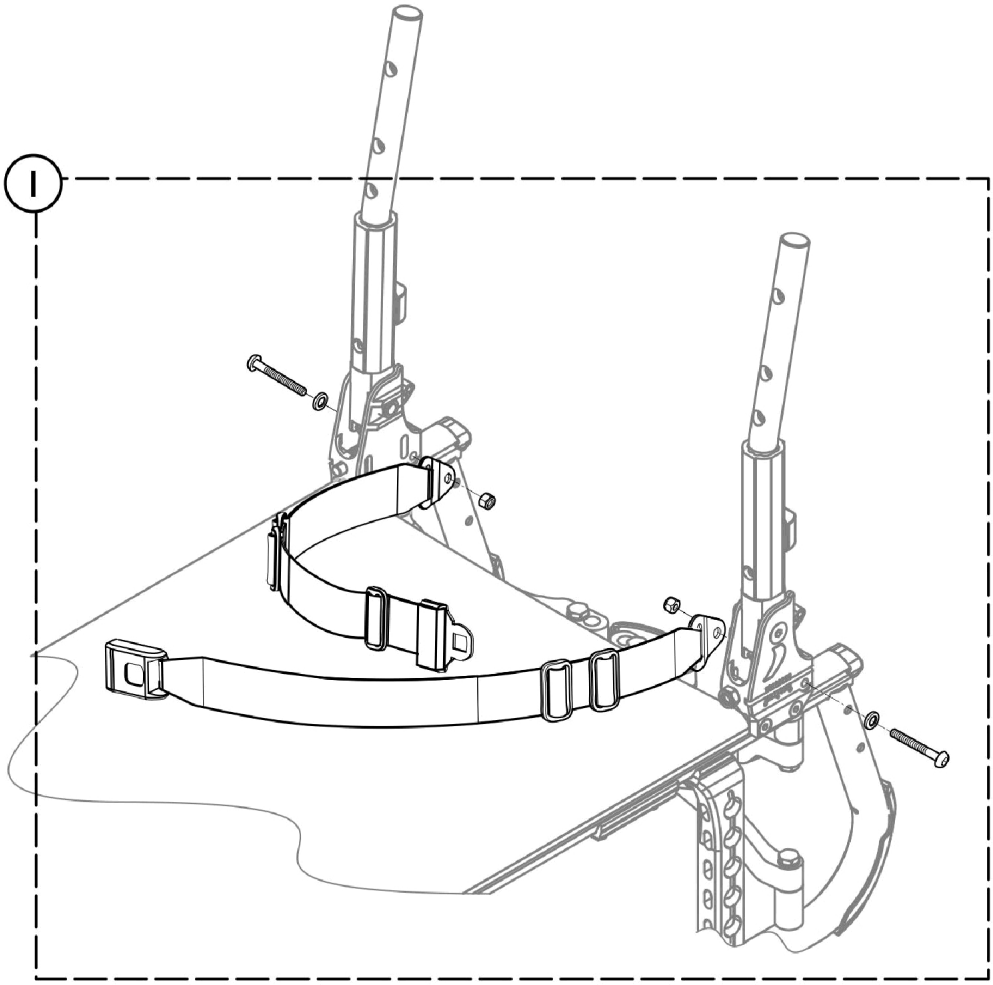

SCM_165A

Item Number	Note	Part Number	Description	Quantity Per	
				Package	Assembly
1		SP1590426	Kit, Buckle Belt Metal (12-18" W)	1	1
2		SP1590427	Kit, Buckle Belt Metal (19-21" W)	1	1

Accessories - Tipping Aid

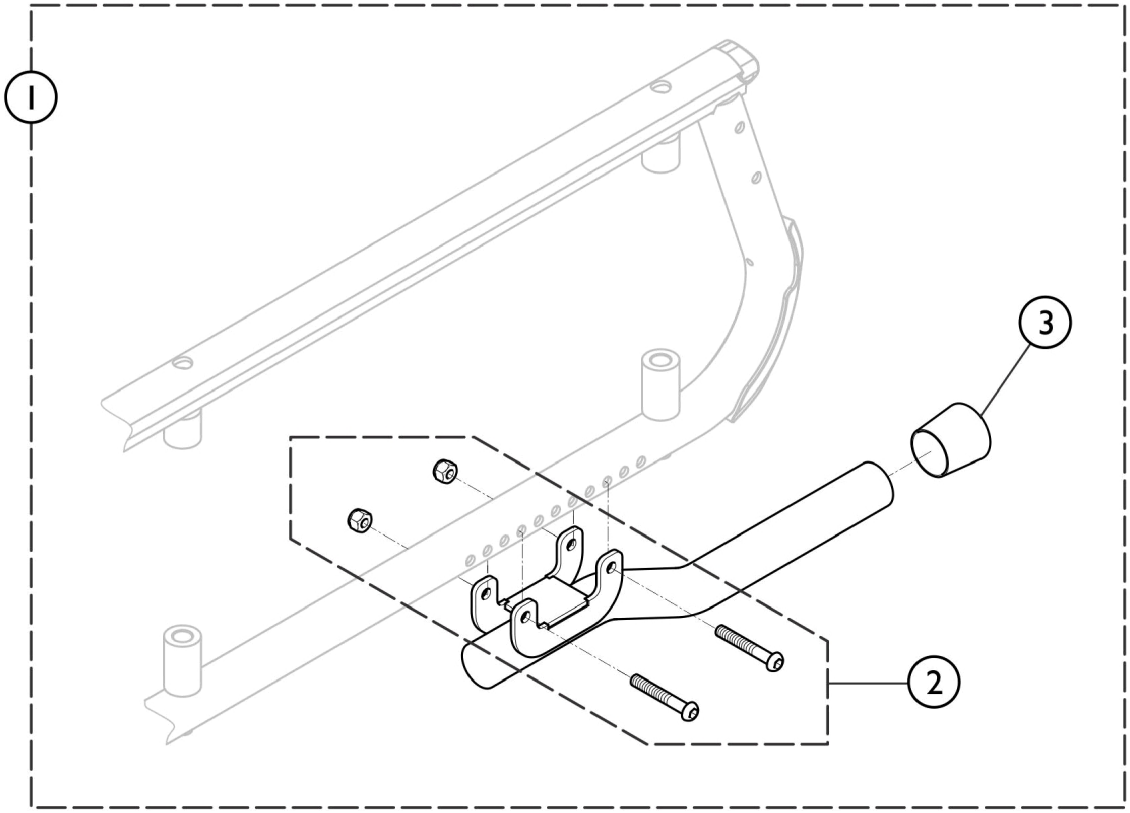

SCM_181A

Item Number	Note	Part Number	Description	Quantity Per	
				Package	Assembly
1	A	SP1581062	Tipping Aid, Complete	1	1
2		SP1589693	Kit, Hardware, Tipping Aid	1	1
3		SP1589694	Plastic Cap, Tipping Aid	1	1

NOTE: A - Includes items 2 and 3.

Accessories - Travel/Storage Connector Strap

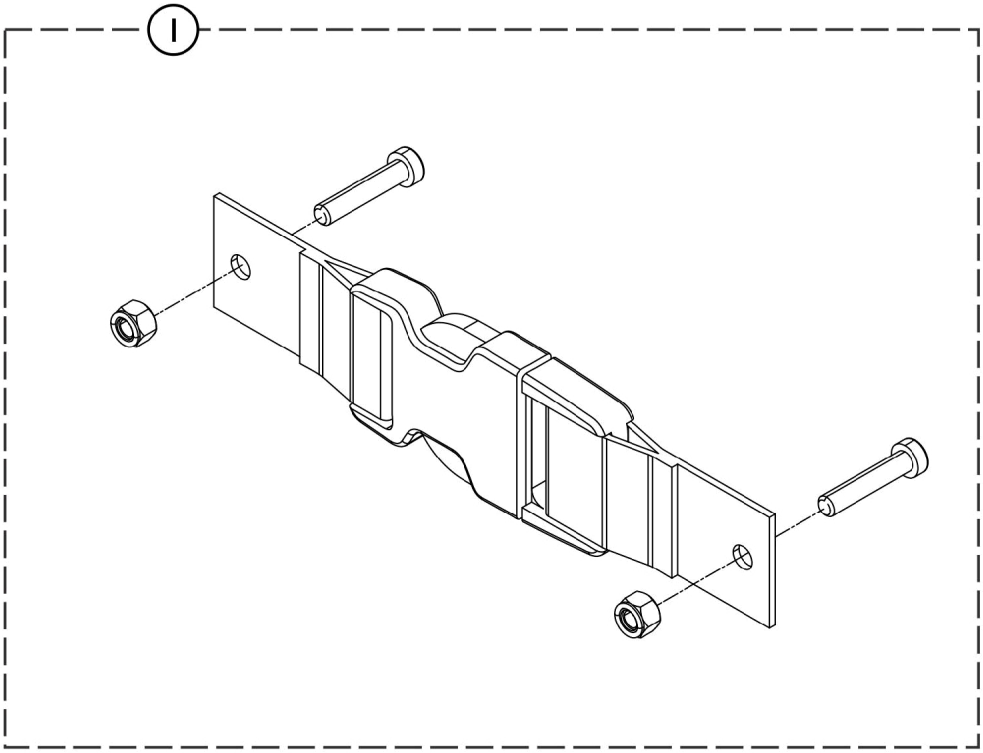

SCM_120A

Item Number	Note	Part Number	Description	Quantity Per	
				Package	Assembly
1		SP1590820	Travel/Storage Connector Strap	1	1

Accessories - Tool Kit

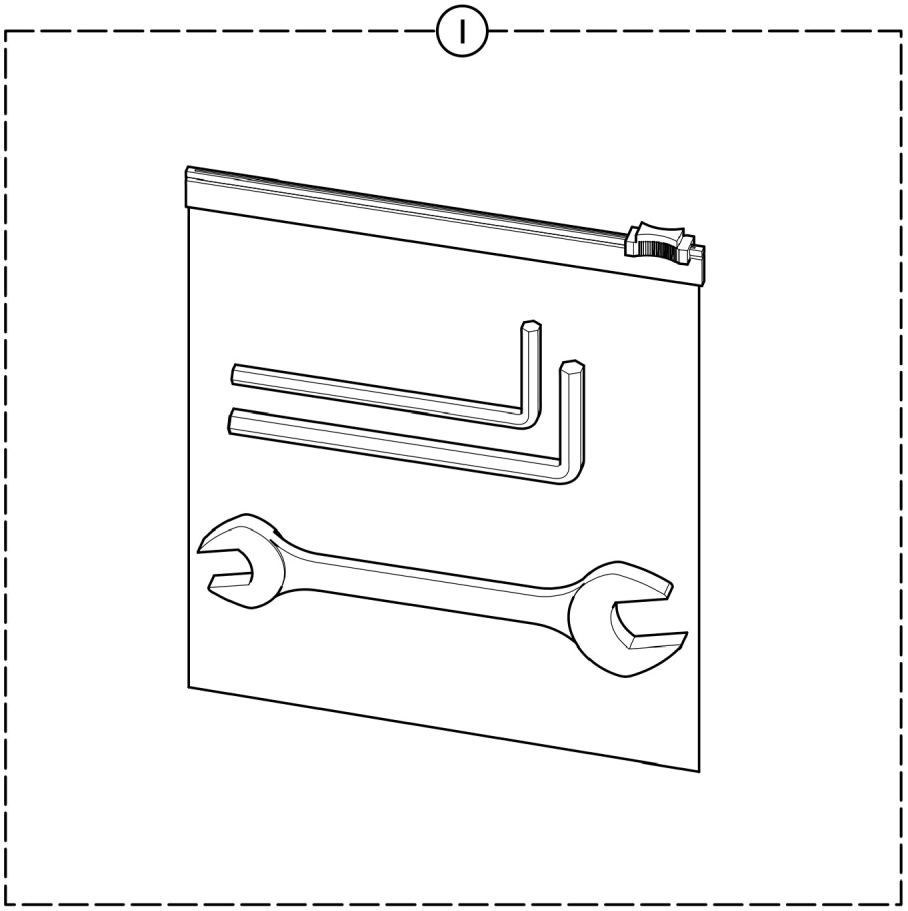

SCM_182B

Item Number	Note	Part Number	Description	Quantity Per	
				Package	Assembly
1	A	SP1603974	Tool Kit	1	1

NOTE: A - Tool Kit components are not sold individually.

Invacare Corporation

www.invacare.com

One Invacare Way
Elyria, Oh USA
44035
800-333-6900

Technical Support
800-832-4707
Customer Service
800-333-6900

Literature Orders
800-333-6900

© 2022 Invacare Corporation. All rights reserved. Republication, duplication or modification in whole or in part is prohibited without prior written permission from Invacare. Trademarks are identified by ™ and ®. All trademarks are owned by or licensed to Invacare Corporation or its subsidiaries unless otherwise noted.
(Revised 11/11/22)

Form No. 16-043