Parts Catalog

Issued: Mar 23, 2022

TDX®3
TDX®3 SE
TDX®4
TDX®5
Front Riggings & MK5 Electronics

Yes, you can.

Parts Catalog Usage Guide

The information contained in this document is subject to change without notice. This catalog contains service parts for Form No. 06-101. If you have any questions regarding this catalog, please contact one of our Customer Service Representatives.

For Customer Service Support Call:
1-800-333-6900
For Faxed In Orders Call:
1-800-678-4682 or
1-440-366-0709
For Technical Service Call:
1-800-832-4707
Literature Can Be Found at:
www.invacare.com or
1-800-828-6272

SYMBOL DEFINITION

Throughout this catalog you will notice letters to draw your attention to specific footnotes which are located at the bottom of the page or below specified charts.

Examples:

A,B,C etc.	=	Special Comments
NOTE:	=	General information pertaining to that specific page
NLA	=	No Longer Available

HARDWARE MEASUREMENTS

The measurements for the hardware will be listed as follows:

Screws, Bolts	Diameter X Thread Count/Pitch X Length
Washers	Inside Diameter X Outside Diameter X Thickness
Spacers	Inside Diameter X Outside Diameter X Length

For your convenience, we have supplied an area for you to list your Invacare Representatives.

Name	Phone Numbers

© 2022 Invacare Corporation. Elyria, Ohio. Invacare, Yes, you can., the Blue Medallion Design, SureStep, TDX and Tarsys are registered trademarks and MKIV, MK5, NX, EX, SPJ, DPJ, MPJ, TT, GB, and TCD are trademarks of Invacare Corporation.
Otto Bock is a registered trademark of Otto Bock Orthopaedische Industrie GMBH & Co.. Tash is a registered trademark of Tash International Inc.. Therafin is a registered trademark of
W/R/ Medical Electronics Co.. Bussman is a registered trademark of Cooper Industries. MIDI is a registered trademark of Littelfuse Inc.. Dynamic is a registered trademark of Dynamic Controls Limited.

TABLE of CONTENTS

Description	Page Number
A: READ THIS FIRST (THIS CATALOG IS DIFFERENT!)	6
Electronics - 4-Way Switch & Mounting Hardware	143
Electronics - Dual Legs Integrated Actuator Module - DLIAM - MK6i For ELRPW Front Riggings	91
Electronics - Joystick Options	141
Electronics - MK5 Display	136
Electronics - MK5 DPJ Joystick & Mounting Hardware	95
Electronics - MK5 EX Controller - Programmer - Shroud Cover & Hardware	107
Electronics - MK5 EX Controller - Programmer - Shroud Cover TRRO/TRBKTS Option	109
Electronics - MK5 MPJ Joystick & Mounting Hardware	97
Electronics - MK5 NX-80 Controller - Programmer - Shroud Cover & Hardware	101
Electronics - MK5 NX-80 Controller - Programmer - Shroud Cover & Hardware - Invisible Super Low Tilt	103
Electronics - MK5 NX-80 Controller - Programmer - Shroud Cover TRRO/TRBKTS Option	105
Electronics - MK5 PSF/PSR Joysticks	99
Electronics - MK5 SPJ-80 Joystick & Mounting Hardware	93
Electronics - MK5 TAC & Mounting Hardware	145
Electronics - MK5 TT (TrueTrack) EX Controller - Programmer - Shroud Cover & Hardware	111
Electronics - MK5 TT (TrueTrack) EX Controller - Programmer - Shroud Cover TRRO/TRBKTS Option	114
Electronics - MK6i ~PLEASE READ FIRST	90
Electronics - Proportional Attendant Control Joystick - PACM5	139
Electronics - Quad Link - QLA (After 10/30/05)	129
Electronics - Quad Link (1/13/04 - 10/30/05)	125

TABLE of CONTENTS

Description	Page Number
Electronics - Quad Link (10/9/03 - 1/12/04) For 1556 Heavy Duty Joystick	123
Electronics - Quad Link (10/9/03 - 1/12/04) For MK5 MPJ Joystick	121
Electronics - Quad Link (10/9/03 - 1/12/04) For MK5 SPJ-80 & DPJ Joystick	119
Electronics - Quad Link (Before 10/9/03)	116
Electronics - R.I.M. Head Control Assembly - 1500	131
Electronics - R.I.M. Head Control Mounting Hardware - 1500	134
Electronics - Sip-N-Puff / Digital Interface 1554M4/1554M5 - AUX12 & AUX34	137
Electronics - Tash & Therafin Accessories	147
Frame Finishes - Touch-Up Paints & Upholstery Options	7
Front Riggings - Adjustable Angle Footplate Assemblies - AT5543	38
Front Riggings - Calf Pads & Attaching Hardware	32
Front Riggings - Center Mount Rigging (CTMT/CTMT-F/CTMT-L/CTMT-FL) (Before 12/10/08)	46
Front Riggings - Center Mount Rigging (CTMT-F with CTMTFB One PC Flip-Up Footboard) After 12/30/09	51
Front Riggings - Center Mount Rigging (CTMT-F/CTMT-FL with CTMTFB One PC Flip-Up Footboard) Before 12/31/09	49
Front Riggings - Center Mount Rigging (CTMTJ/CTMT-FJ) (Before 12/10/08)	44
Front Riggings - Center Mount Rigging (CTMT-J/CTMT-FJ/CTMT/CTMT-F/CTMT-L/CTMT-FL) (After 12/09/08)	55
Front Riggings - Center Mount Rigging Kit (CTMT/CTMT-L) For ASBA Seats (Before 7/5/05)	72
Front Riggings - Center Mount Rigging Kit (CTMT-F/CTMT-FL/CTMT-FJ) For ADJASBA Seat (After 7/4/05 - 12/09/08)	75
Front Riggings - Center Mount Rigging Kit (CTMTJ) For ASBA Seats (Before 7/5/05)	69
Front Riggings - Center Mount Rigging Mtg. Hdwr. (CTMT/CTMT-L/CTMTJ) (12" - 24" W) (Before 7/5/05)	63
Front Riggings - Center Mount Rigging Mtg. Hdwr. (CTMT-F/CTMT-FL/CTMT-FJ) (12" - 16" W) (After 7/4/05)	65

TABLE of CONTENTS

Description	Page Number
Front Riggings - Center Mount Rigging Mtg. Hdwr. (CTMT-F/CTMT-FL/CTMT-FJ) (16" - 24" W) (After 7/4/05)	67
Front Riggings - Footrest & Legrest Accessories	41
Front Riggings - Footrest Support Assemblies - Sector Style	23
Front Riggings - Footrest Supports - Hemi - PHW93	25
Front Riggings - Front Rigging Hanger Assembly - Pin & Sector Style (12" - 24" W) (Before 7/5/05)	17
Front Riggings - Front Rigging Hanger Hdwr. - Pin & Sector Style For ADJASBA (12" - 16" W) (After 7/4/05)	19
Front Riggings - Front Rigging Hanger Hdwr. - Pin & Sector Style For ADJASBA/ADJRECL (16" - 24" W) (After 7/4/05)	21
Front Riggings - Legrest Supports - AT5544	27
Front Riggings - Legrest Supports, Articulating (Hemi) - PHAL4A	29
Front Riggings - Pivot/Slide Tube & 1650 - 1350 Aluminum Footplates	36
Front Riggings - Pivot/Slide Tube & 1651 Composite Footplates	34
Front Riggings - Power Articulating Legrest - ELRPW/ELRPW22 (After 7/26/04)	83
Front Riggings - Power Articulating Legrest - ELRPW/ELRPW22 (Before 7/27/04)	79
Front Riggings - Power Articulating Legrest - ELRPW/ELRPW22 Harness & Hdwr. For ADJASBA Seat (After 7/4/05)	88
Front Riggings - Power Articulating Legrest - ELRPW/ELRPW22 Harness & Hdwr. For ASBA (Before 7/5/05)	86
Front Riggings - Reference Chart - 70MFX & 90 SWING	15
Front Riggings - Reference Chart - 70ST TAPER	16
Front Riggings - Reference Chart - AT5544 - 70NHD - PHW93	13
Front Riggings - Reference Chart - PHAL4A	14
Label Locations For TRRO & TRBKTS Options	11
Packaging - Literature & Decals	9

TABLE of CONTENTS

Description	Page Number
TRRO & TRBKTS Option Clarification Reference	12

A: READ THIS FIRST (THIS CATALOG IS DIFFERENT!)

TDX3, TDX3 SE, TDX4, TDX5
parts catalog information is now divided into three separate catalogs.

The Form Numbers and Cover Titles are listed below.

Form # 03-025
TDX3
TDX3 SE
TDX4
TDX5
Powered Wheelchairs

Form # 06-101
TDX3
TDX3 SE
TDX4
TDX5
Front Riggings & MK5 Electronics

Form # 06-110
MK6i Electronics
(MK6i was introduced on or about 10/9/06)

Use all three form numbers to order a "complete" Parts Catalog

Frame Finishes, Touch-Up Paints and Upholstery Options

Frame Finishes and Touch-Up Paint

Color Number	Part Number	Bottle Size	Frame Finish
08P	1031456-NLA	.6 oz.	Deep Purple
17P	1046319-NLA	.6 oz.	Cobalt Blue
22P	1033376-NLA	.6 oz.	Anthracite
24P	1031450-NLA	.6 oz.	Wet Black
29P	1031447-NLA	.6 oz.	White
30P	N/A	N/A	Sunny Yellow
33P	1031455-NLA	.6 oz.	Red
34P	1046327-NLA	.6 oz.	Flat Black
60P	N/A	N/A	Silver Metallic
61P	1046321-NLA	.6 oz.	Electric Red
62P	1046320-NLA	.6 oz.	Electric Blue
66P	1046322-NLA	.6 oz.	Electric Purple
69P	1101320-NLA	.6 oz.	Teflon Black
71P	N/A	N/A	Silver Vein
80P	1073892-NLA	.6 oz.	Evergreen with Navy
83P	1073895-NLA	.6 oz.	Royal Blue with Grape
84P	1073896-NLA	.6 oz.	Lavender
101P	1101325-NLA	.6 oz.	Jeweled Green
102P	1101327-NLA	.6 oz.	Denim Blue
103P	1101324-NLA	.6 oz.	Mocha Frost
104P	1101316-NLA	.6 oz.	Electric Teal
105P	1101326-NLA	.6 oz.	MIdnight Blue
115P	1133371-NLA	.6 oz.	Black Prism
116P	1133372-NLA	.6 oz.	Sunkissed Orange
117P	1133373-NLA	.6 oz.	Tangerine Red
118P	1133374-NLA	.6 oz.	Fruit Fusion
119P	1133375-NLA	.6 oz.	Bubblegum Pink
120P	1133376-NLA	.6 oz.	Grape Madness
121P	1133377-NLA	.6 oz.	Lolly Pop Blue
122P	1133378-NLA	.6 oz.	Cosmic Blue
123P	1133379-NLA	.6 oz.	Celestial Purple
124P	1133380-NLA	.6 oz.	Vivid Violet
125P	1133381-NLA	.6 oz.	Emerald Green
126P	1133382-NLA	.6 oz.	Shamrock Green
127P	1133383-NLA	.6 oz.	Grasshopper Green

Frame Finishes, Touch-Up Paints and Upholstery Options

Sparkle Frame Finishes

Color Number	Frame Finish
88P	Wet Black with Twilight Sparkle

Upholstery Options

Nylon Color
U240 Black

Packaging, Literature and Decals

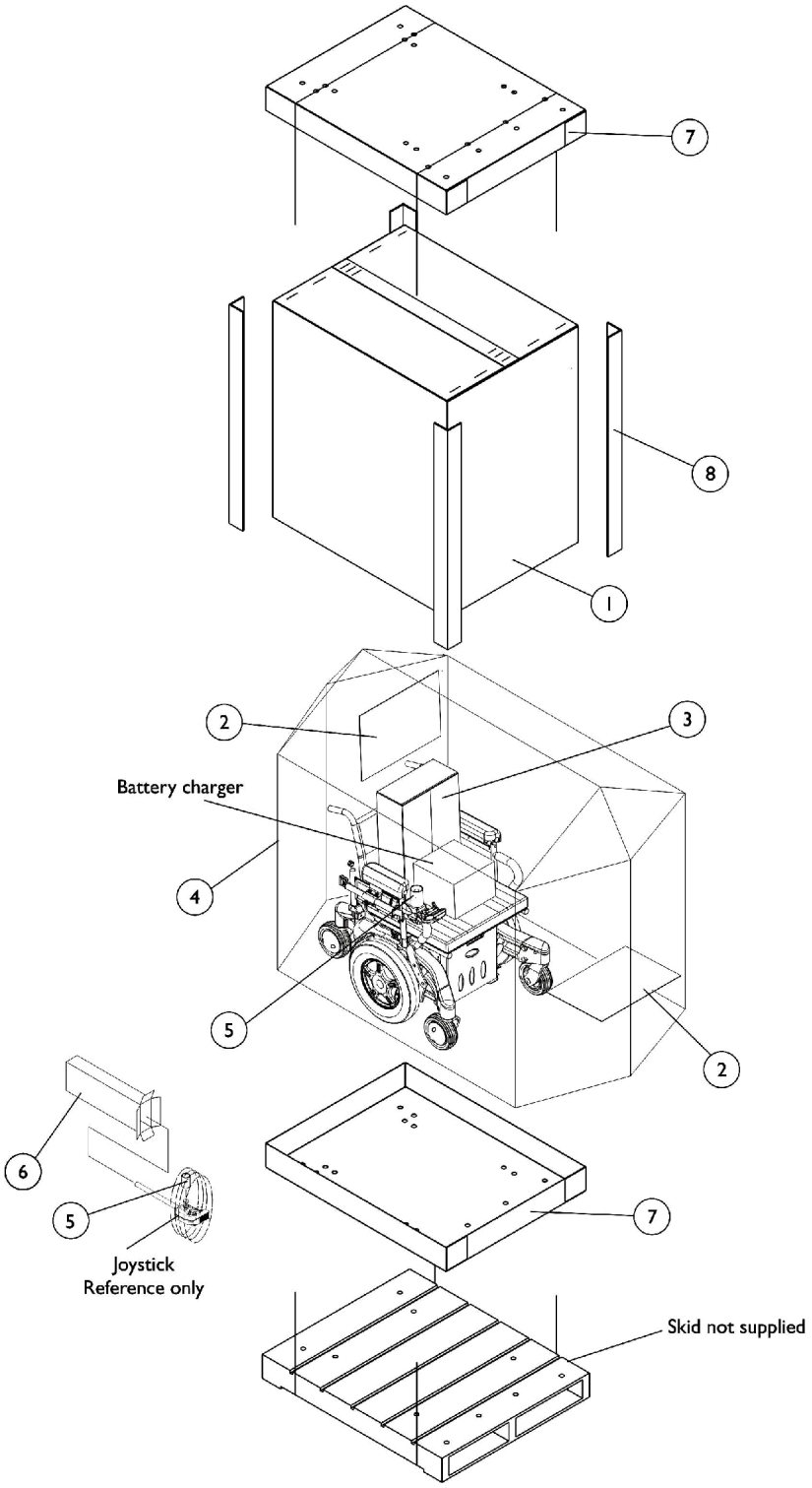

Packaging, Literature and Decals

Item Number	Note	Part Number	Description	Quantity Per Package	Quantity Per Assembly
1	A	1030365	Carton, Cover	1	1
1	B	1030364	Carton, Cover	1	1
1	C	1031682	Carton, Cover	1	1
1	D	1036028	Carton, Cover	1	1
2		40131X161	Insert, Plain Pad	1	2
3		40131X011-NLA	NLA - Carton, Front Riggings	1	1
4		1015592	Bag, Poly (72" L x 35" W x 19" D)	1	1
5		1043198-NLA	NLA - Tube, Paper	1	1
6	J	1012001-NLA	NLA - Carton, Joystick	1	1
7	E	1030362	Carton, Tray	1	2
7	F	1036027	Carton, Tray	1	2
8	E	1115174	Carton, Corner Reinforcement	1	4
8	C	1129589-NLA	Carton, Corner Reinforcement	1	4
8	F	1129590-NLA	Carton, Corner Reinforcement	1	4
	G	00077X031-NLA	NLA - Warranty Card	1	1
	G	1114809-NLA	NLA - Owner's Manual, TDX w/ MK5 Electronics	1	1
	G	1143150-NLA	NLA - Owner's Manual, TDX Base w/ MK6i Electronics	1	1
	G,H	1117207-NLA	NLA - Decal, TDX 3, Yellow	1	2
	G,H,I	1144624	Decal, TDX 3, Black	1	2
	G,H	1146484-NLA	NLA - Decal, TDX 3 SE, Yellow	1	2
	G,H,I	1146485-NLA	NLA - Decal, TDX 3 SE, Black	1	2
	G,H	1117206-NLA	NLA - Decal, TDX 4, Yellow	1	2
	G,H,I	1144623	Decal, TDX 4, Black	1	2
	G,H	1117205-NLA	NLA - Decal, TDX 5, Yellow	1	2
	G,H,I	1144622	Decal, TDX 5, Black	1	2

NOTE:
A - Base only and all A.S.B.A. seat only models
B - 12" Wide - 20" Wide A.S.B.A. seat with base models
C - 16" Wide - 20" Wide A.S.B.A. seat with base models with medium and tall seat-to-floor heights
D - 21" Wide - 24" Wide A.S.B.A. seat with base models
E - 12" Wide - 20" Wide A.S.B.A. seat with base and base only models
F - 21" Wide - 24" Wide A.S.B.A. seat with base models
G - Not Shown
H - Model Decal attaches to the walking beam assembly
I - Black Decal is used whenever frame color 30P, Sunny Yellow is ordered.
J - Can use Item #3 part number 40131X011 for a Joystick also.

When adjusting or replacing parts, please refer to your Owner's Manual for assistance.

Label Locations For TRRO and TRBKTS Options

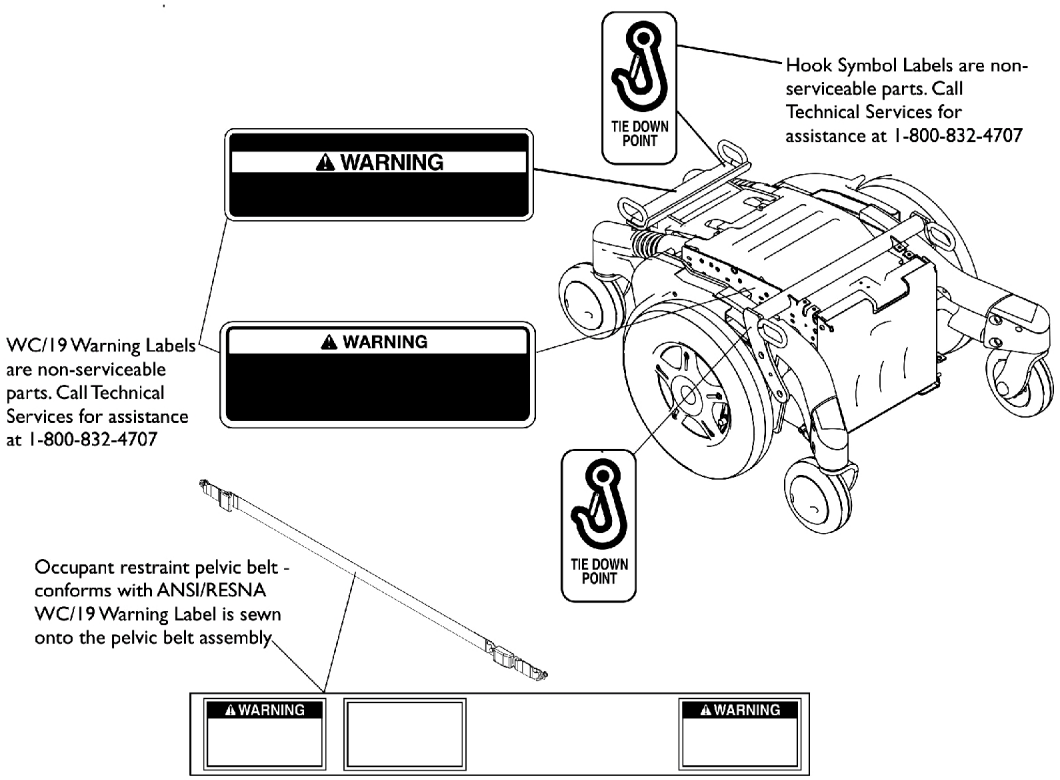

TRRO Option Label Locations

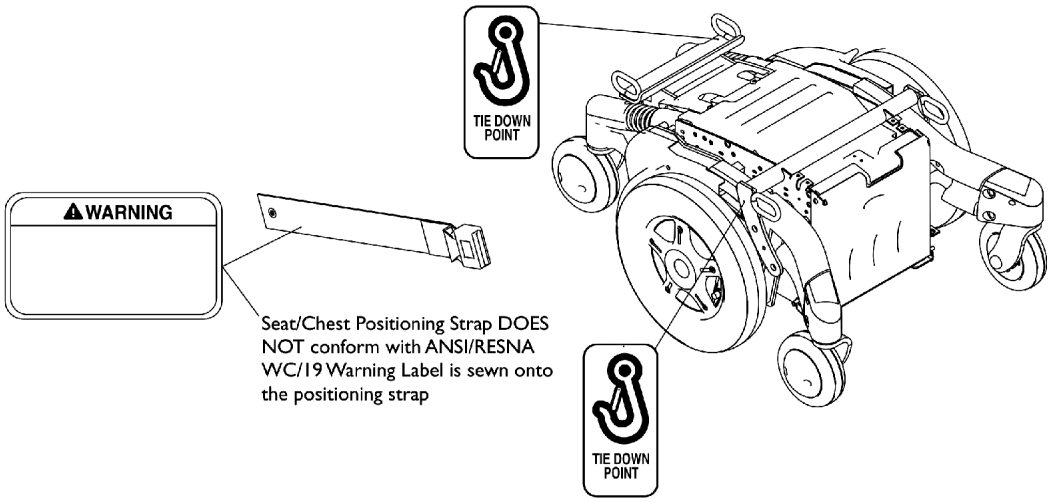

TRBKTS Option Label Locations

TRRO and TRBKTS Option Clarification Reference

TRRO and TRBKTS Option was introduced 12/19/05 as an On-Chair option only.

About Transport Ready Packages

TRRO includes four factory-installed transport brackets and a wheelchair anchored pelvic belt. **TRRO** has been crash-tested in accordance with ANSI/RESNA WC Vol. 1 Section 19 Frontal Impact Test requirements for wheelchairs with a 168 lb. Crash dummy, which corresponds to a person with weight of 114 to 209 lbs.

TRBKTS includes four factory-installed wheelchair transport brackets. **TRBKTS** has not been crash-tested in accordance with WC 19. Use these transport brackets only to secure an unoccupied wheelchair during transport.

Only use the transport brackets included with **TRRO** and **TRBKTS** for the purpose described in the appropriate Owner's Operator and Maintenance Manual.

Battery support brackets MUST be installed at all times. Otherwise, the wheelchair will not be WC/19 compliant. Refer to Removing/Installing the Batteries From/Into the Wheelchair in the appropriate Owner's Operator and Maintenance Manual.

As of this date, the Department of Transportation has not approved any tie-down systems for transportation of a user while in a wheelchair, in a moving vehicle of any type. It is Invacare's position that users of wheelchairs should be transferred into appropriate seating in vehicles for transportation and use be made of the restraints made available by the auto industry. Invacare cannot and does not recommend any wheelchair transportation systems.

NOTE: ANSI = American National Standards Institute, RESNA = Rehabilitation Engineering and Assistive Technology Society of North America.

Front Riggings Reference Chart
For AT5544, 70NHD, PHW93

NOTE: Calf pads with attaching hardware not included on legrest.
NOTE: Pivot/ Slide tube attaching hardware not included.
NOTE: Pivot/Slide tube and footplates do not include heel loops. See footrest and legrest accessories.

1651 = Composite footplate with 9-7/8" curved pivot/ slide tube.
AT5543 = Adjustable angle footplate with 9-7/8" straight pivot/ slide tube.
1350 = Extra large footplate with "L" style pivot/ slide tube.

Support Assemblies - AT5544, 70NHD, PHW93

Rigging Type	AT5544	70NHD	PHW93
Right	8881045291 See Note(s) A	8881053149 See Note(s) A	8881126089 See Note(s) A
Left	8881045292 See Note(s) A	8881053148 See Note(s) A	8881126090 See Note(s) A
NOTE: A - Specify frame color when ordering, see page titled "Frame Finishes and Touch-Up Paints".			

Pivot/ Slide Tube and Footplates For AT5544, 70NHD, PHW93

Footplate Type	1651 13-14" W	1651 15-16" W	1651 17-24" W	1350 17-24" W	AT5543 12-13" W	AT5543 14-15" W	AT5543 16-24" W
Right	1057859 See Note(s) A	1057869 See Note(s) A	1057879	1026395	1060442	1060444	1062756
Left	1057860 See Note(s) A	1057870 See Note(s) A	1057880	1026396	1060443	1060445	1062757
Right 2" Longer	1057861 See Note(s) A	1057871 See Note(s) A	1057881	1086515	N/A	1062758	1062760
Left 2" Longer	1057862-NLA See Note(s) A	1057872 See Note(s) A	1057882	1086517	N/A	1062759	1062761
Right 4" Longer	1058419-NLA See Note(s) A	1058421 See Note(s) A	1058423	1086516	N/A	1121138-NLA	1121140
Left 4" Longer	1058420-NLA See Note(s) A	1058422 See Note(s) A	1058424	1086518	N/A	1121139-NLA	1121141
NOTE: A - Not available on AT5544 legrest 13-15" wide							

Front Riggings Reference Chart
For PHAL4A

NOTE: Calf pads with attaching hardware not included on legrest.
NOTE: Pivot/Slide tube attaching hardware not included.
NOTE: Pivot/Slide tube and footplates do not include heel loops. See footrest and legrest accessories.

1650 = Aluminum footplate with "L" style pivot/slide tube.
1350 = Extra large footplate with "L" style pivot/slide tube.

Support Assembly - PHAL4A

Rigging Type	PHAL4A (Chrome Only)
Right	1031437-NLA
Left	1031438-NLA

Pivot/Slide Tube and Footplates For PHAL4A

Footplate Type	1650 16-24" W	1350 17-24" W
Right	1023907	1035456
Left	1023908	1035457

Front Riggings Reference Chart
For 70MFX and 90 SWING

NOTE: Footplates do not include heel loops. See footrest and legrest accessories.

AT5543 = Adjustable angle footplates without pivot/slide tubes.

Support Assemblies - 70MFX

Footplate Assemblies are interchangeable with the support assemblies listed.

Rigging Type	70MFX
Right	8881047481 See Note(s) A
Left	8881047480 See Note(s) A
NOTE: A - Specify frame color when ordering, see page titled "Frame Finishes and Touch-Up Paints".	

Support Assemblies - 90 SWING

Footplate Assemblies are interchangeable with the support assemblies listed.

Rigging Type	90 SWING
Right	8881062596 See Note(s) A
Left	8881062597 See Note(s) A
NOTE: A - Specify frame color when ordering, see page titled "Frame Finishes and Touchup Paints".	

Footplate Assemblies For 70MFX and 90 SWING

Footplate Type	AT5543 12-13" W	AT5543 14-15" W
Right	1060436-NLA	1060438
Left	1060437	1060439

Front Riggings Reference Chart
70ST TAPER

NOTE: Pivot/Slide tube attaching hardware not included.
NOTE: Pivot/Slide tube and footplates do not include heel loops. See footrest and legrest accessories.

1651 = Composite footplate with 9-7/8" curved pivot/slide tube.

Support Assemblies - 70ST TAPER

Rigging Type	70ST TAPER
Right	8881026996 See Note(s) A
Left	8881026997 See Note(s) A

NOTE: A - Specify frame color when ordering, see page titled "Frame Finishes and Touch-Up Paints".

Pivot/Slide Tube and Footplates For 70ST TAPER

Footplate Type	1651 16-17" W	1651 18-19" W	1651 20-24" W
Right	1057859	1057869	1057879
Left	1057860	1057870	1057880
Right 2" Longer	1057861	1057871	1057881
Left 2" Longer	1057862-NLA	1057872	1057882

Front Rigging Hanger Assembly

Pin and Sector Style For Chairs with ASBA Seats (Before 7/5/05)

NOTE: Front Rigging Hangers and Seat Pans share the same mounting hardware, see Seat Pan and Mounting Hardware page for the illustration.

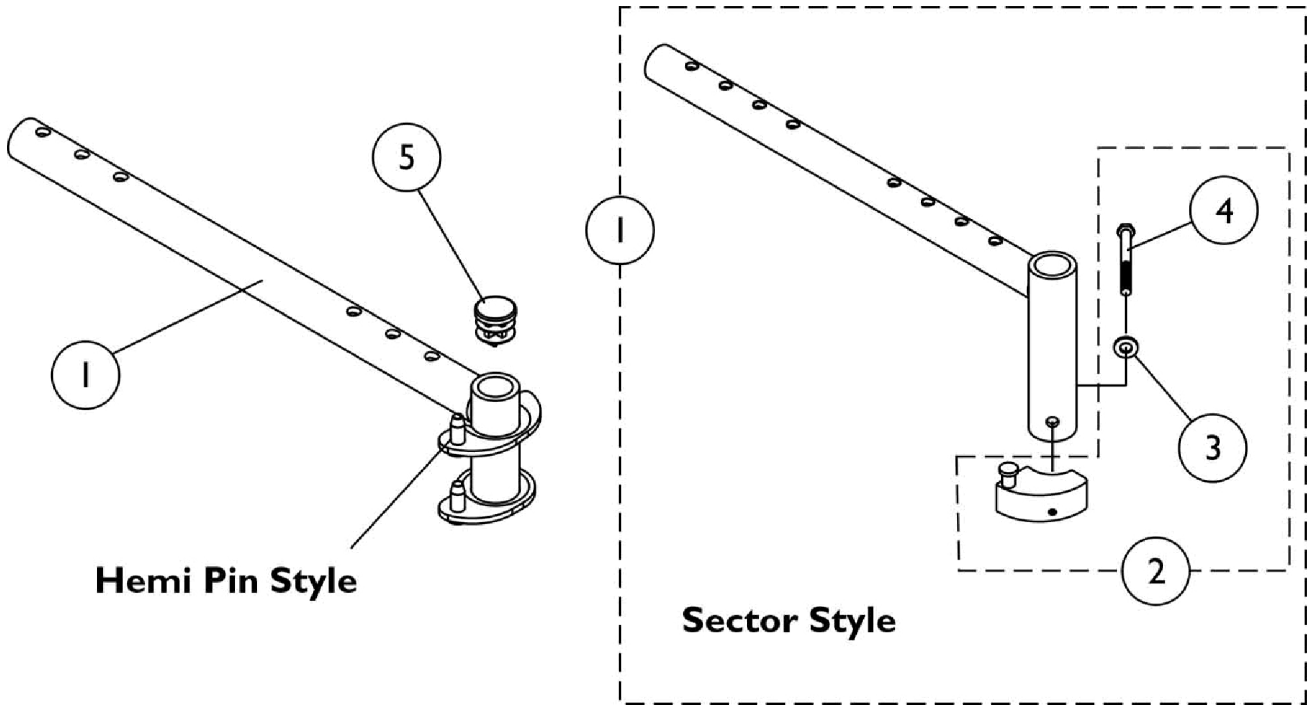

Front Rigging Hanger Assembly

Pin and Sector Style For Chairs with ASBA Seats (Before 7/5/05)

NOTE: Front Rigging Hangers and Seat Pans share the same mounting hardware, see Seat Pan and Mounting Hardware page for the illustration.

Item Number	Note	Part Number	Description	Quantity Per	
				Package	Assembly
1	A	1068435	Front Rigging Hanger Assembly w/ Sector Block, Black - Right (12 - 21" D)	1	1
1	A	1068436	Front Rigging Hanger Assembly w/ Sector Block, Black - Left (12 - 21" D)	1	1
1	A	1068437-NLA	NLA - Front Rigging Hanger Assembly w/ Sector Block, Black - Right (22" D)	1	1
1	A	1068438-NLA	NLA - Front Rigging Hanger Assembly w/ Sector Block, Black - Left (22" D)	1	1
1		1114766	Front Rigging Hanger Assembly w/ Plug Button, Pin Style, Hemi, Black - Right (12 - 21" D)	1	1
1		1114767	Front Rigging Hanger Assembly w/ Plug Button, Pin Style, Hemi, Black - Left (12 - 21" D)	1	1
1		1132339-NLA	NLA - Front Rigging Hanger Assembly w/ Plug Button, Pin Style, Hemi, Black - Right (22" D)	1	1
1		1132340-NLA	NLA - Front Rigging Hanger Assembly w/ Plug Button, Pin Style, Hemi, Black - Left (22" D)	1	1
2	B	1054571	Kit, Sector Block - Right	1	1
2	B	1054572	Kit, Sector Block - Left	1	1
3		1026907	Washer (1/4 x 1/2 x 1/16")	1	1
4		1052957	Screw, Hex Head w/ Patch (1/4-20 x 2")	1	1
5		1027097	Plug Button, Black (3/4")	1	1
	C	1070459-NLA	NLA - Kit, Seat Pan Mounting Hardware	1	1
			Screw, Hex Head (1/4-20 x 1-5/8")	1	2
			Screw, Hex Head (1/4-20 x 1-1/2")	1	4
			NLA - Spacer (1/4 x 3/8 x 3/16")	1	4
			Locknut (1/4-20)	1	6

NOTE: A - Includes front rigging hanger and item 2
B - Includes sector block assembly and items 3-4
C - Not Shown. Front Rigging Hangers and Seat Pans share the same mounting hardware

Front Rigging Hangers and Hardware

Pin & Sector Style For ADJASBA (12"-16" Wide) (After 7/4/05)

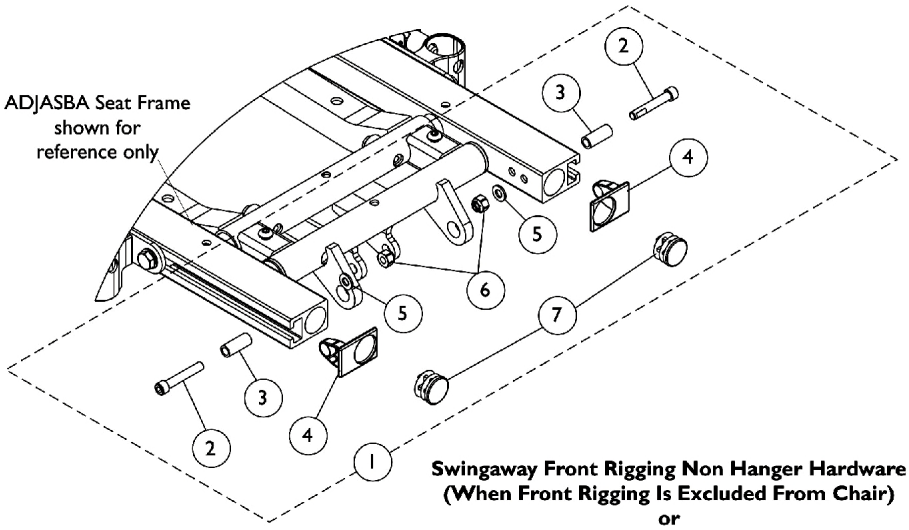

Swingaway Front Rigging Non Hanger Hardware
(When Front Rigging Is Excluded From Chair)
or
When Center Mount Riggings are used

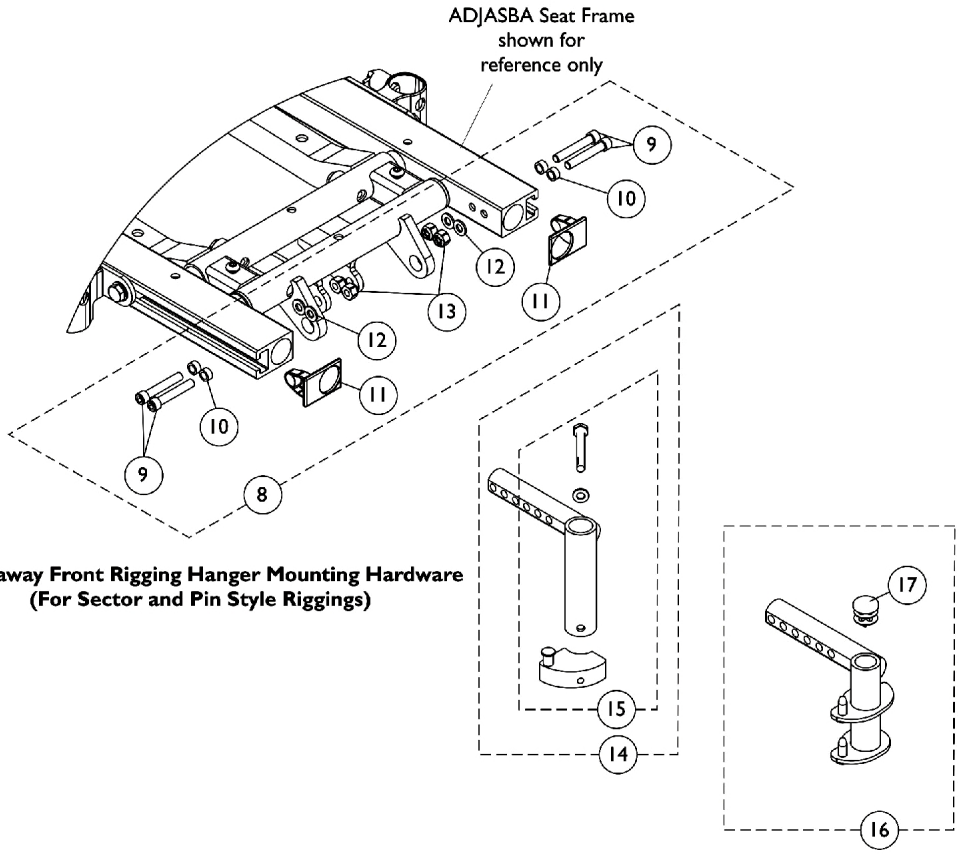

Swingaway Front Rigging Hanger Mounting Hardware
(For Sector and Pin Style Riggings)

Front Rigging Hangers and Hardware

Pin & Sector Style For ADJASBA (12"-16" Wide) (After 7/4/05)

Item Number	Note	Part Number	Description	Quantity Per Package	Quantity Per Assembly
1	A	1126150	Kit, Side Rail Cap Hardware	2	1
2			Screw, Socket Head Cap w/ Patch (1/4-20 x 1-1/2")	1	2
3			Spacer (1/4 x 3/8 x 29/32")	1	2
4			Cap, End, Side Rail, Black	1	2
5			Washer (1/4 x 1/2 x 1/16")	1	2
6			Locknut (1/4-20)	1	2
7			Plug Button, Black (7/8")	1	2
8	B	1136019	Kit, Front Rigging Hanger Mounting Hardware	2	1
9			Screw, Socket Head Cap w/ Patch (1/4-20 x 1-1/2")	1	4
10			NLA - Spacer (1/4 x 3/8 x 3/16")	1	4
11			Cap, End, Side Rail, Black	1	2
12			Washer (1/4 x 1/2 x 1/16")	1	4
13			Locknut (1/4-20)	1	4
14	C	1122602	Front Rigging Hanger Assembly w/ Sector Block, Black - Right	1	1
14	C	1122603	Front Rigging Hanger Assembly w/ Sector Block, Black - Left	1	1
15	D	1054571	Kit, Sector Block - Right	1	1
15	D	1054572	Kit, Sector Block - Left	1	1
16		1124401	Front Rigging Hanger Assembly w/ Plug Button, Pin Style, Hemi, Black - Right	1	1
16		1124402	Front Rigging Hanger Assembly w/ Plug Button, Pin Style, Hemi, Black - Left	1	1
17		1134426	Package, Plug Button, Black (3/4")	10	1
7		1130582	Package, Plug Button, Black (7/8")	10	1

NOTE:
A - Includes items 2-7
B - Includes items 9-13
C - Includes item 15
D - Includes Sector Block, Screw and Washer

Front Rigging Hangers and Hardware

Pin & Sector Style For ADJASBA/ADJRECL (16"-24" Wide) (After 7/4/05)

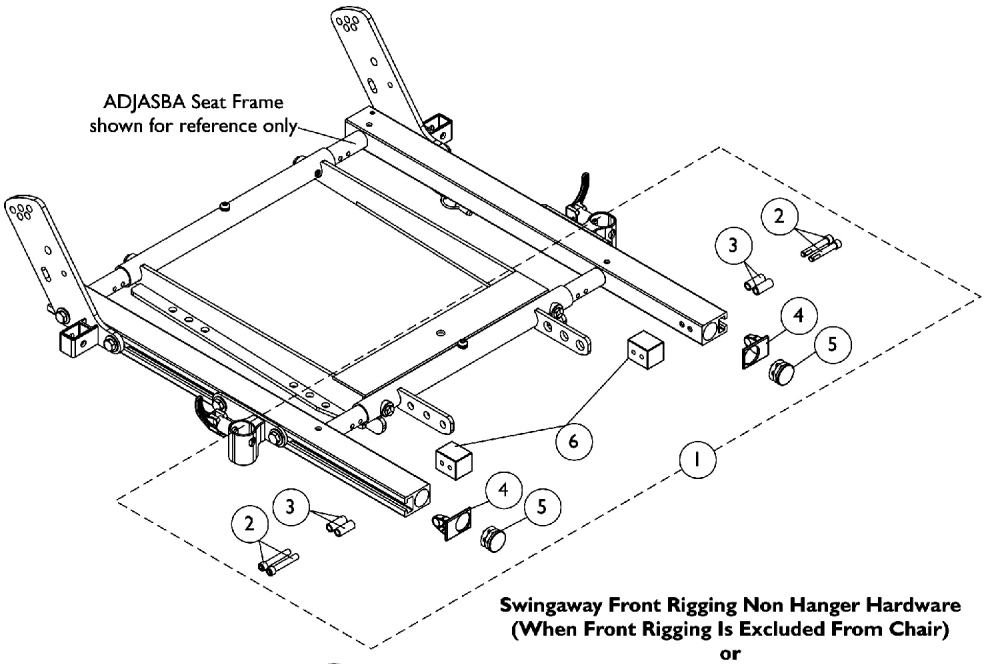

Swingaway Front Rigging Non Hanger Hardware
(When Front Rigging Is Excluded From Chair)
or
When Center Mount Riggings are used

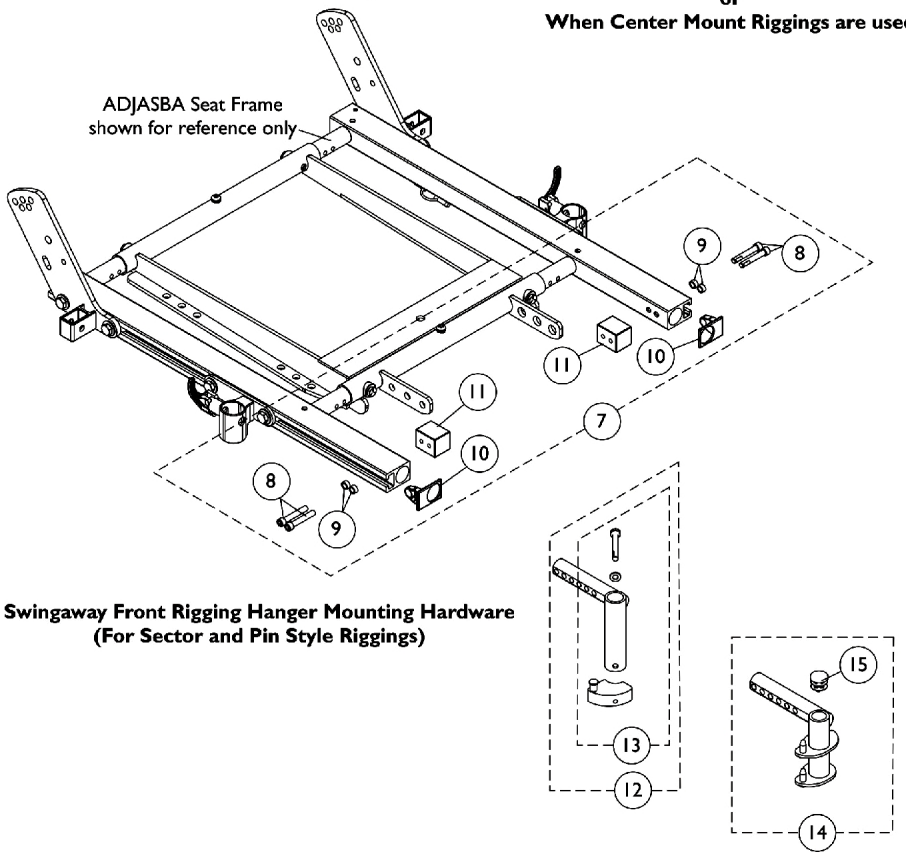

Swingaway Front Rigging Hanger Mounting Hardware
(For Sector and Pin Style Riggings)

Front Rigging Hangers and Hardware

Pin & Sector Style For ADJASBA/ADJRECL (16"-24" Wide) (After 7/4/05)

Item Number	Note	Part Number	Description	Quantity Per	
				Package	Assembly
1	A	1124723	Kit, Side Rail Cap Hardware (Pair)	1	1
2			Screw, Socket Head Cap w/ Patch (1/4-20 x 1-1/2")	1	4
3			Spacer (1/4 x 3/8 x 29/32")	1	4
4			Cap, End, Side Rail, Black	1	2
5			Plug Button, Black (1")	1	2
6			Block, Threaded	1	2
7	B	1125726	Kit, Front Rigging Hanger Mounting Hardware (Pair)	1	1
8			Screw, Socket Head Cap w/ Patch (1/4-20 x 1-1/2")	1	4
9			NLA - Spacer (1/4 x 3/8 x 3/16")	1	4
10			Cap, End, Side Rail, Black	1	2
11			Block, Threaded	1	2
12	C	1122602	Front Rigging Hanger Assembly w/ Sector Block, Black - Right	1	1
12	C	1122603	Front Rigging Hanger Assembly w/ Sector Block, Black - Left	1	1
13	D	1054571	Kit, Sector Block - Right	1	1
13	D	1054572	Kit, Sector Block - Left	1	1
14		1124401	Front Rigging Hanger Assembly w/ Plug Button, Pin Style, Hemi, Black - Right	1	1
14		1124402	Front Rigging Hanger Assembly w/ Plug Button, Pin Style, Hemi, Black - Left	1	1
15		1134426	Package, Plug Button, Black (3/4")	10	1

NOTE:
A - Includes items 2-6
B - Includes items 8-11
C - Includes item 13
D - Includes Sector Block, Screw and Washer

Footrest Support Assemblies
Sector Style

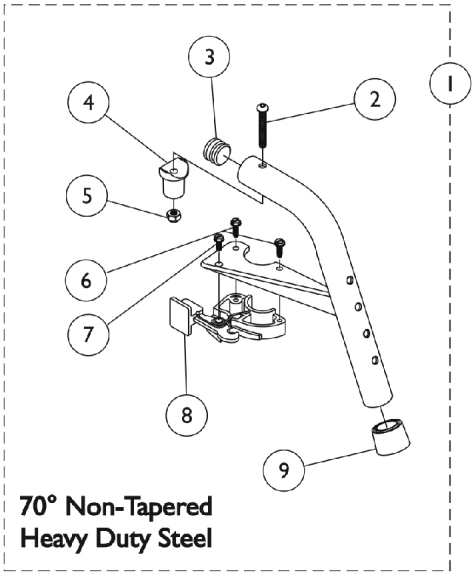

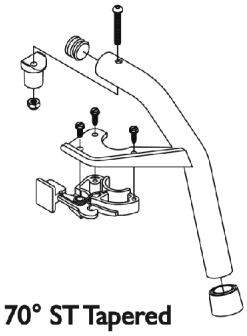

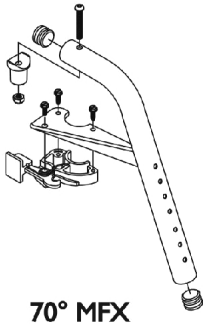

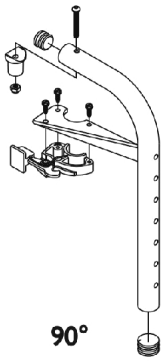

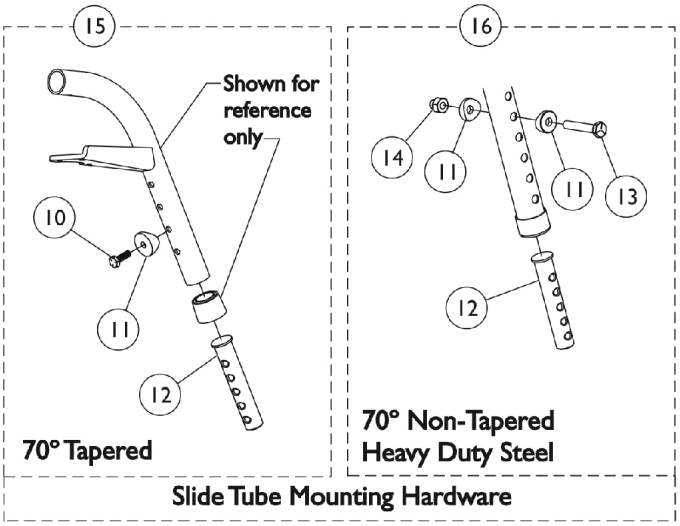

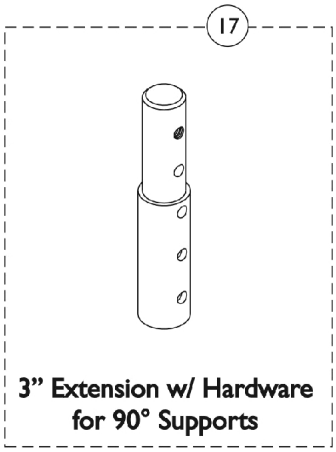

Footrest Support Assemblies
Sector Style

Item Number	Note	Part Number	Description	Quantity Per Package	Quantity Per Assembly
1	A,C	8881053149	Footrest Support Assembly, 70 Degree Non-Tapered Heavy Duty, Sector, Color - Right	1	1
1	A,C	8881053148	Footrest Support Assembly, 70 Degree Non-Tapered Heavy Duty, Sector, Color - Left	1	1
1	A,D	8881026996	Footrest Support Assembly, 70 Degree Tapered, Sector, Color - Right	1	1
1	A,D	8881026997	Footrest Support Assembly, 70 Degree, Tapered, Sector, Color - Left	1	1
1	A,D	8881047481	Footrest Support Assembly, 70 Degree MFX, Sector, Color - Right	1	1
1	A,D	8881047480	Footrest Support Assembly, 70 Degree MFX, Sector, Color - Left	1	1
1	A,D	8881062596	Footrest Support Assembly, 90 Degree, Sector, Color - Right	1	1
1	A,D	8881062597	Footrest Support Assembly, 90 Degree, Sector, Color - Left	1	1
2		1001762	Screw, Socket Button Head (1/4-20 x 1-3/4")	1	1
3	G	1029501	Plug Button, Black (1")	1	1
3	G	1056328	Plug Button, Black (1")	1	1
4		1017148	Pivot, Footrest	1	1
5		1025736	Locknut (1/4-20)	1	1
6		1025451	Screw, Slotted Hex Washer Head (#10-32 x 5/8")	1	2
7		1017423	Screw, Slotted Hex Washer Head w/ Patch (#10-32 x 1/2")	1	1
8		1025454	Housing, Latch - Right	1	1
8		1025455	Housing, Latch - Left	1	1
9		1026124	Collar, Anti-Rattle	1	1
10		1045267	Screw, Hex Head w/ Patch (1/4-20 x 3/4")	1	1
11	B	1026099	Spacer, Coved (1/4 x 11/16 x 1/2")	1	1
12	F	1020534	Insert, Threaded	1	1
13		1070759	Screw, Hex Head (1/4-20 x 1-1/2")	1	1
14		1044214	Nut, Hex with Nylon Cap (1/4-20)	1	1
15		1026703-NLA	NLA - Kit, Pivot/Slide Tube Mounting Hardware (Pair)	1	1
16		1057846	Kit, Pivot/Slide Tube Mounting Hardware (Pair)	1	1
17	A	8881038231	Kit, 3" Extension w/ Hardware (Pair)	1	1
	E	1026987	Guard, Impact (8" L)	1	1

NOTE:
A - Specify frame color when ordering. See page titled "Frame Finishes and Touch-Up Paints."
B - Item 16 takes 2
C - Uses Item Number 3, Plug Button 1029501
D - Uses Item Number 3, Plug Button 1056328
E - Not Shown. For 70 deg. Tapered Footrest.
F - As of 8/15/03, the Threaded Insert was revised from 3 to 5 Holes. Threaded Insert is Backward Compatible and does not require ordering in Pairs.
G - See item #1 footnote C or D for Front Rigging Plug Button usage.

PHW93 (Hemi) Footrest Supports
Color (Pin Style)

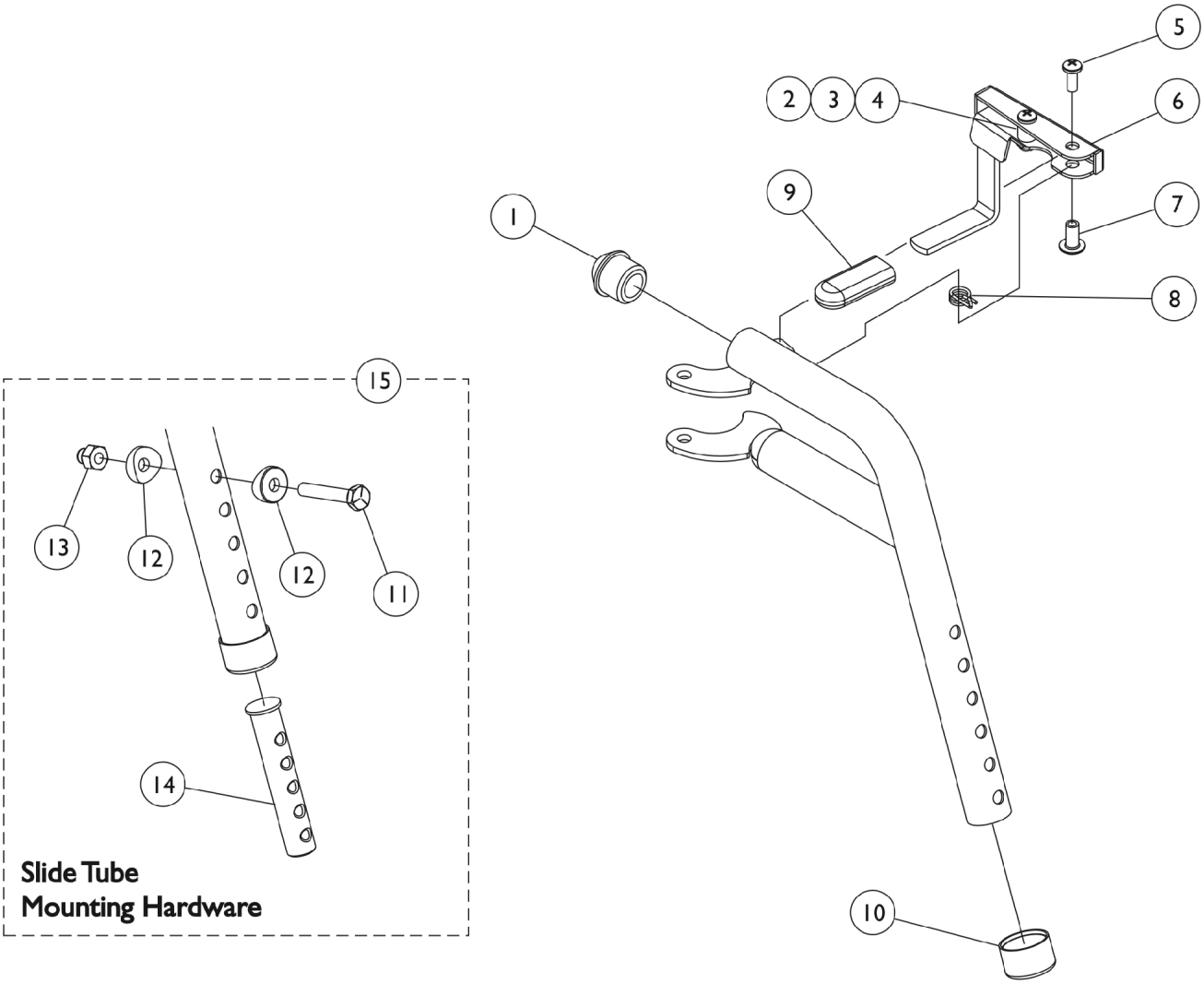

PHW93 (Hemi) Footrest Supports
Color (Pin Style)

Item Number	Note	Part Number	Description	Quantity Per Package	Quantity Per Assembly
1		1020719	Anti-Rattle, Black	1	1
2		1025716	Screw, Phillips Pan Head (#10-32 x 11/16")	1	1
3		47565X057	Bushing (7/32 x 3/8 x 11/32")	1	1
4		1025735	Locknut (#10-32)	1	1
5		1026114	Screw, Phillips Pan Head (#10-32 x 1/2")	1	1
6	A	1114749-NLA	NLA - Handle, Release, Black - Right	1	1
6	A	1114750-NLA	NLA - Handle, Release, Black - Left	1	1
7		1028846-NLA	NLA - Rivnut (#10-32)	1	1
8		1028707	Spring, Release - Right	1	1
8		1028708	Spring, Release - Left	1	1
9		1006490-NLA	NLA - Tip, Plastic, Black	1	1
10		15680X012	Collar, Anti-Rattle (7/8")	1	1
11		1070759	Screw, Hex Head (1/4-20 x 1-1/2")	1	1
12		1026099	Spacer, Coved (1/4 x 11/16 x 1/2")	1	2
13		1044214	Nut, Hex with Nylon Cap (1/4-20)	1	1
14	C	1020534	Insert, Threaded	1	1
15		1074143	Kit, Slide Tube Mounting Hardware	1	1
	B	8881126089	Footrest Support Assembly, Hemi, Color - Right	1	1
	B	8881126090	Footrest Support Assembly, Hemi, Color - Left	1	1

NOTE: A - Includes items 2-4
B - Specify frame color when ordering, see page titled "Frame Finishes and Touch-Up Paints".
C - As of 8/15/03, the Threaded Insert was revised from 3 to 5 Holes. Threaded Insert is Backward Compatible and does not require ordering in Pairs.

AT5544 Legrest Supports
(Sector Style)
16"-24" Wide Chairs

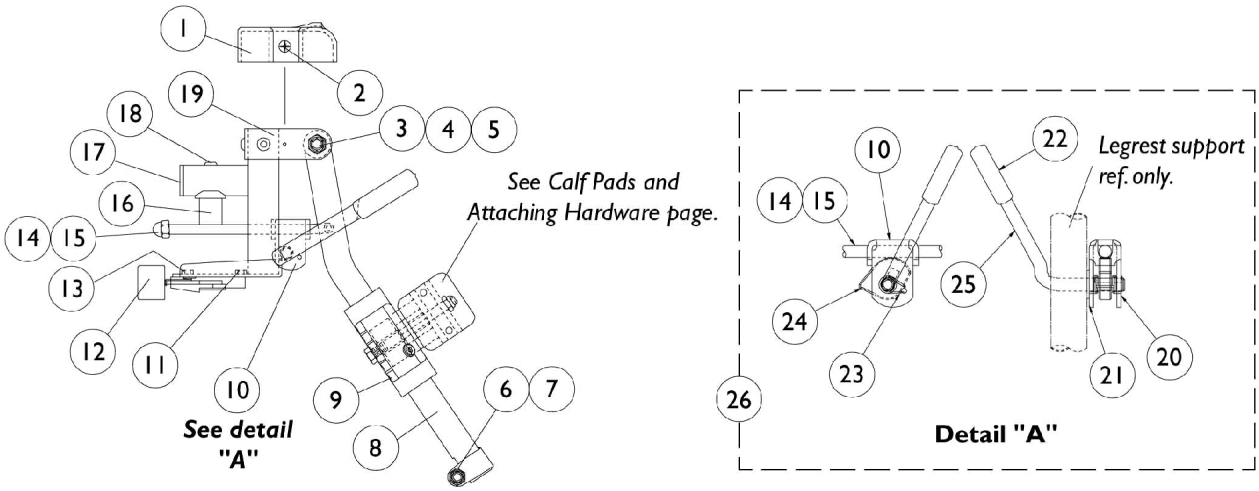

AT5544 Legrest Supports
(Sector Style)
16"-24" Wide Chairs

Item Number	Note	Part Number	Description	Quantity Per Package	Quantity Per Assembly
1		1017187	Cover, Top	1	1
2		1028529	Screw, Phillips Pan Head (#8-32 x 3/8")	1	2
3		40363X000	Hex Nut (3/8"-16)	1	1
4		1058636-NLA	NLA - Washer, Nylon (25/64 x 7/8 x 1/32")	1	2
5		11919X000-NLA	NLA - Screw, Slotted Truss Head (3/8-16 x 1-1/2")	1	1
6		7930330-NLA	NLA - Locknut (5/16-24)	25	3
7		1026030	Bolt, Lug (5/16-24 x 1-3/8")	1	1
8		1043556-NLA	NLA - Tube, Elevating Adjustable Support, Black - Right	1	1
8		1043557-NLA	NLA - Tube, Elevating Adjustable Support, Black - Left	1	1
8	A	8881048851	Tube, Elevating Adjustable Support, Color - Right	1	1
8	A	8881048852	Tube, Elevating Adjustable Support, Color - Left	1	1
9		1032266	Bracket, Legrest Pad Mounting, Black	1	1
10		04528X002	Bracket, Release, Black	1	1
11		1025451	Screw, Slotted Hex Washer Head (#10-32 x 5/8")	1	2
12		1025454	Housing, Latch - Right	1	1
12		1025455	Housing, Latch - Left	1	1
13		7930314	Package, Screw, Slotted Hex Washer Head (#10-32 x 1/2")	25	1
14		42326X001	Bar, Ratchet	1	1
15		7930336-NLA	NLA - Nut, Acorn (5/16-24)	25	1
16		1017148	Pivot, Footrest	1	1
17		1029501	Plug Button, Black (1")	1	1
18		7930301-NLA	NLA - Package, Button Head Cap Screw (1/4-20 x 1-3/4")	25	1
19	A	8881045289	Bracket, Legrest Support, Color - Right	1	1
19	A	8881045290	Bracket, Legrest Support, Color - Left	1	1
20		1040831	Ring, Snap	1	1
21		7930310-NLA	NLA - Washer, Nylon (5/16 x 11/16 x 1/16")	25	1
22		1040060	Tip, Plastic, Black	1	1
23		1037485	Spring, Release	1	1
24		1037125	Cam, Legrest	1	1
25		1037126	Handle, Release	1	1
26	B	1096974	Kit, Elevating Legrest Ratchet Hardware (Pair)	2	1
	C,D	1096943-NLA	NLA - Instruction Sheet, Ratchet Kit	1	1
	A,C	8881045291	Legrest Support Assembly, Sector, Color - Right	1	1
	A,C	8881045292	Legrest Support Assembly, Sector, Color - Left	1	1

NOTE:
A - Specify frame color when ordering. See page titled "Frame Finishes and Touch-Up Paints".
B - Includes items 10, 14, 15 and 20-25
C - Not Shown
D - Item is no longer available from the Invacare Service Parts Department. Refer to the Invacare Website under "Product Literature Search". Enter the part number in the "Keywords" field and download a free PDF version copy.

PHAL4A (Hemi) Articulating Legrest Supports

Chrome

Due to a change to the Legrest Calf Pad size made on 4/23/12, you must also order the hardware kit (1068649) when ordering replacement Calf Pads.

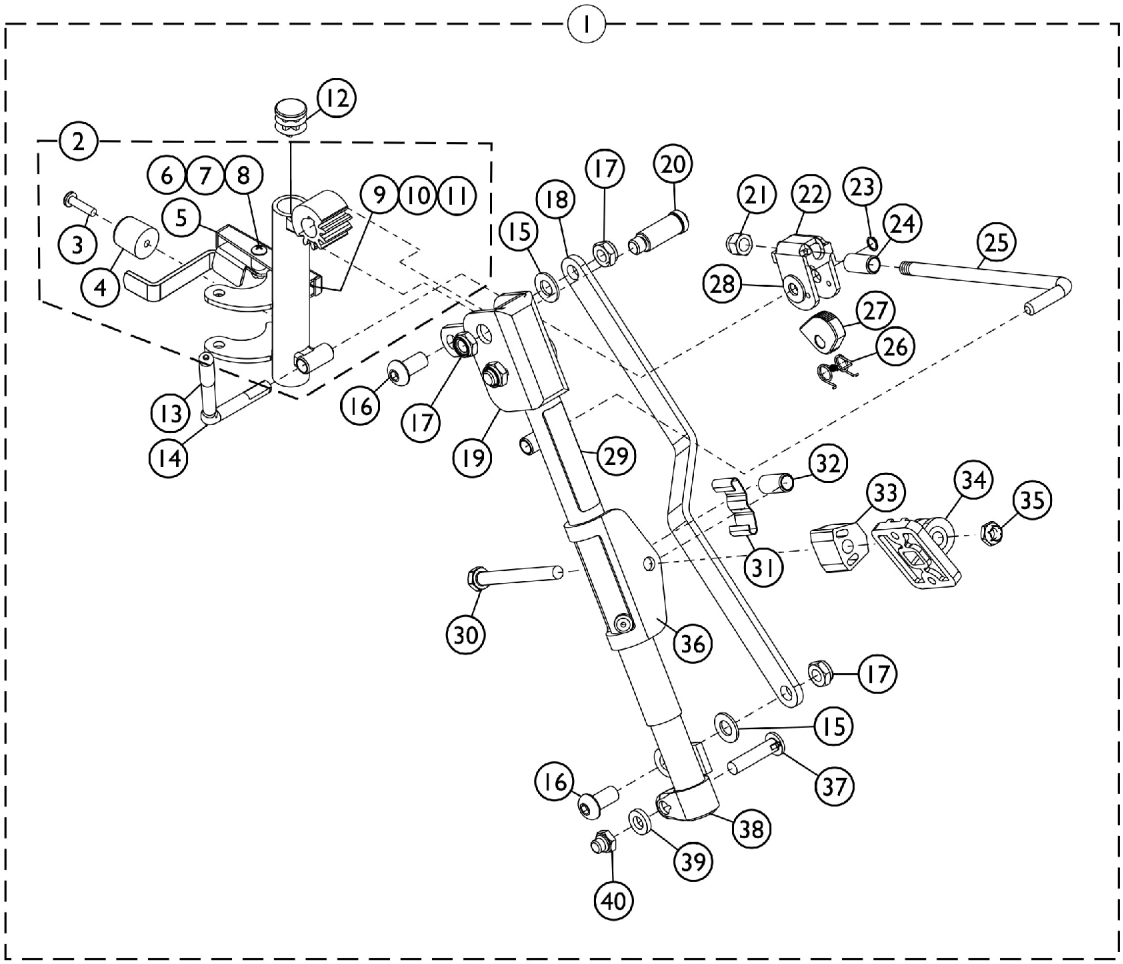

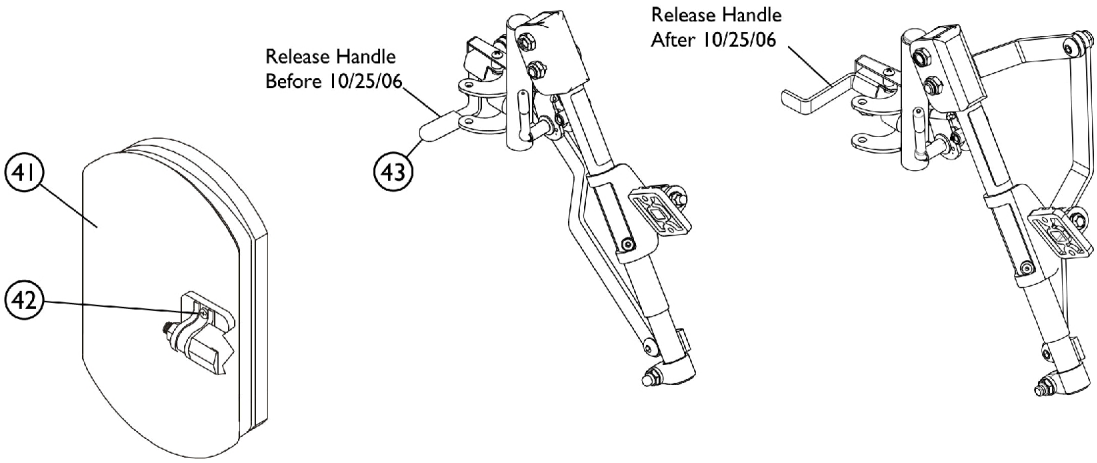

PHAL4A (Hemi) Articulating Legrest Supports

Chrome

Due to a change to the Legrest Calf Pad size made on 4/23/12, you must also order the hardware kit (1068649) when ordering replacement Calf Pads.

Item Number	Note	Part Number	Description	Quantity Per Package	Quantity Per Assembly
1	B,D,D1	1031437-NLA	NLA - Legrest Support Assembly, Articulating, Hemi, Chrome - Right	1	1
1	B,D,D1	1031438-NLA	NLA - Legrest Support Assembly, Articulating, Hemi, Chrome - Left	1	1
2	D,D1,H	1023092-NLA	NLA - Legrest Support Tube Assembly, Hemi, Chrome - Right	1	1
2	D,D1,H	1023093-NLA	NLA - Legrest Support Tube Assembly, Hemi, Chrome - Left	1	1
3		1030979	Screw, Phillips Pan Head Tap (#10-32 x 3/4")	1	1
4		1022874	Bumper	1	1
5	E	1035539	Handle, Release, Black - Right	1	1
5	E	1035540	Handle, Release, Black - Left	1	1
6		47565X057	Bushing (7/32 x 3/8 x 11/32")	1	1
7		60279X003	Locknut (#10-32)	1	1
8		40163X008	Screw, Phillips Pan Head (#10-32 x 11/16")	1	1
9		1008935	Spring, Release - Right	1	1
9		1008936	Spring, Release - Left	1	1
10		67005X000	Rivnut (#10-32)	1	1
11		40163X002	Screw, Phillips Round Head (#10-32 x 1/2")	1	1
12		1027097	Plug Button, Black (3/4")	1	1
13		1040060	Tip, Plastic, Black	1	1
14		1037126	Handle, Release	1	1
15		1049527	Washer, Nylon (3/8 x 3/4 x 1/16")	1	2
16		1022866-NLA	NLA - Screw, Socket Button Head (3/8-16 x 3/4")	1	2
17		40363X000	Hex Nut (3/8"-16)	1	3
18		1022846-NLA	NLA - Bar, Link, Black	1	1
19		1022877-NLA	NLA - Tube, Support and Drive Link, Chrome - Right	1	1
19		1022878-NLA	NLA - Tube, Support and Drive Link, Chrome - Left	1	1
20		1022854-NLA	NLA - Screw, Shoulder Slotted Head (1/2 x 1-1/8", 3/8-16)	1	1
21		10261X000	Nut, Acorn (5/16-24)	1	1
22		04528X002	Bracket, Release, Black	1	1
23		1040831	Ring, Snap	1	1
24		47328X003	Bushing, Pivot (5/16 x 7/16 x 7/8")	1	1
25		42326X004	Bar, Ratchet - Right/Left	1	1
26		1037485	Spring, Release	1	1
27		1037125	Cam, Legrest	1	1
28		1013519	Washer, Nylon (5/16 x 11/16 x 1/16")	1	1
29		1024911-NLA	NLA - Decal, Smartleg	1	1
30		1014807	Screw, Hex Head (5/16-24 x 3-1/4")	1	1
31		48823X008	Spring, Leaf	1	1
32		47328X003	Bushing, Pivot (5/16 x 7/16 x 7/8")	1	1

PHAL4A (Hemi) Articulating Legrest Supports

Chrome

Due to a change to the Legrest Calf Pad size made on 4/23/12, you must also order the hardware kit (1068649) when ordering replacement Calf Pads.

Item Number	Note	Part Number	Description	Quantity Per Package	Quantity Per Assembly
33		1025133	Spacer, Legrest Pad, Black	1	1
34		04526X019	Plate, Legrest Pad	1	1
35		60264X001	Locknut (5/16-24)	1	1
36		1025104	Bracket, Legrest, Chrome	1	1
37		11232X009	Bolt, Lug (5/16-24 x 1-3/8")	1	1
38		1022848	Tube, Slide, Articulating, Chrome - Right	1	1
38		1022849	Tube, Slide, Articulating, Chrome - Left	1	1
39		1027377	Washer (#20)	1	1
40		1107321	Nut, Low Cap (5/16"-24)	1	1
41	A,C,G	8881091764	Pad, Legrest, Vinyl - Right/Left	1	1
42	F	1068649	Hardware, Legrest Pad	1	1
			Screw, Phillips Pan Head (#10-32 x 11/16")	1	2
			Screw, Phillips Pan Head (#10-32 x 1")	1	2
			Instruction Sheet, Legrest Pad Mtg.	1	1
43		1006490-NLA	NLA - Tip, Plastic, Black	1	1

NOTE:
A - Specify upholstery color U67 black when ordering.
B - Includes items 3-40.
C - For 16" and wider seats.
D - Release Handle revised 10/25/06. When a complete Legrest Assembly item #1 or a Legrest Support Tube Assembly item #2 is ordered for chairs manufactured before 10/25/06, order the opposite side "Release Handle" item #5 to match.
D1 - Both Release Handles pictured to identify the difference. Release Handle after 10/24/06 does not require a rubber tip
E - Release Handle revised 10/25/06. For chairs manufactured before 10/25/06, order in pairs to match.
F - Includes Screws and Instruction Sheet.
G - Due to a change to the Legrest Calf Pad size made on 4/23/12, you must also order the hardware kit (1068649) when ordering replacement Calf Pads.
H - Includes the Legrest Support Tube and items 3-11.

Calf Pads and Attaching Hardware

NOTE: For replacement calf pads for Power Articulating Legrest, see Power Articulating Legrest page.

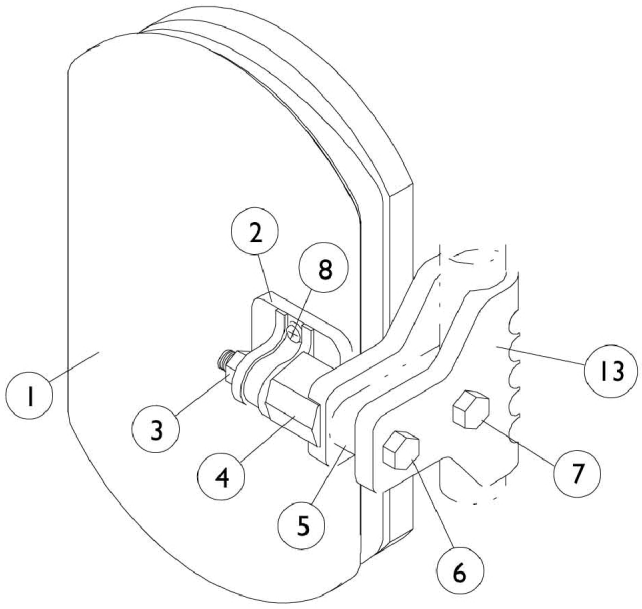

AT5544 Legrest.

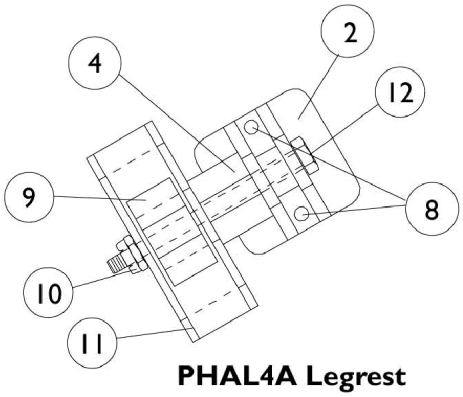

PHAL4A Legrest

Calf Pads and Attaching Hardware

NOTE: For replacement calf pads for Power Articulating Legrest, see Power Articulating Legrest page.

Item Number	Note	Part Number	Description	Quantity Per	
				Package	Assembly
1	A,D	8881091759	Pad w/ Cover and Screws, Legrest Vinyl (Pair)	2	1
1	A,D	8881091764	Pad, Legrest, Vinyl - Right/Left	1	1
1	A,B,D	88804529X003	Pad, Legrest, Vinyl - Right	1	1
1	A,B,D	88804529X004	Pad, Legrest, Vinyl - Left	1	1
2		04526X019	Plate, Legrest Pad	1	1
3		7930330-NLA	NLA - Locknut (5/16-24)	25	1
4		1025133	Spacer, Legrest Pad, Black	1	1
5		1032267	Spacer, Legrest Pad Mounting, Black	1	1
6		1037110	Screw, Hex Head (5/16-24 x 3-1/2")	1	1
7		1028514	Screw, Hex Head (5/16-24 x 1-1/2")	1	1
8	C	1066591	Hardware, Legrest Pad	1	1
			Screw, Phillips Pan Head (#10-32 x 11/16")	1	2
			Screw, Phillips Pan Head (#10-32 x 1")	1	2
			Instruction Sheet, Legrest Pad Mtg.	1	1
9		48823X008	Spring, Leaf	1	1
10		7930363-NLA	NLA - Package, Locknut (5/16"-24)	25	2
11		1025104	Bracket, Legrest, Chrome	1	1
12		1014807	Screw, Hex Head (5/16-24 x 3-1/4")	1	1
13		1032266	Bracket, Legrest Pad Mounting, Black	1	1

NOTE:
A - Specify upholstery color. See page titled "Frame Finishes, Touch-Up Paints and Upholstery Options".
B - 14"-15" Wide Chairs
C - Includes Screws and Instruction Sheet.
D - Due to a change to the Legrest Calf Pad size made on 4/23/12, you must also order the hardware kit (1066591) when ordering replacement Calf Pads.

Pivot/Slide Tube and 1651 Composite Footplates

NOTE: Heel Loops are not included. See Footrest and Legrest Accessories.
NOTE: For complete pivot/slide tube and footplate assemblies, see Front Riggings Reference Charts

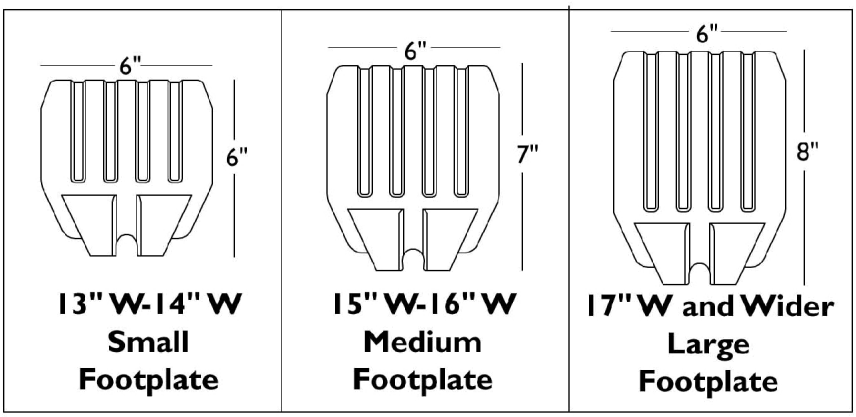

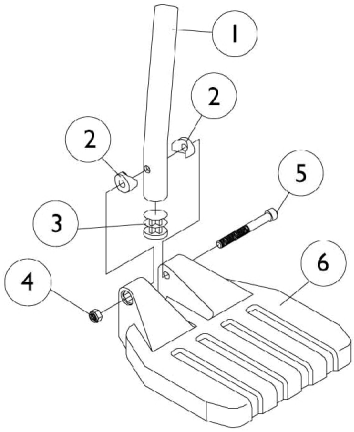

Pivot/Slide Tube and 1651 Composite Footplates

NOTE: Heel Loops are not included. See Footrest and Legrest Accessories.
NOTE: For complete pivot/slide tube and footplate assemblies, see Front Riggings Reference Charts

Item Number	Note	Part Number	Description	Quantity Per	
				Package	Assembly
1		1057852	Tube, Pivot/Slide, Curved End, Steel, Black (9-7/8")	1	1
1		1057854	Tube, Pivot/Slide, Curved End, 2" Longer, Steel, Black	1	1
1		1058418	Tube, Pivot/Slide, Curved End, 4" Longer, Steel, Black	1	1
2		1025457	Spacer, Coved (1/4 x 3/4 x 11/32")	1	2
3		1027097	Plug Button, Black (3/4")	1	1
4		7930323-NLA	NLA - Package, Locknut (1/4-20)	25	1
5		7930366	Package, Socket Head Screw (1/4-20 x 2-1/4")	25	1
6	A	1026879	Footplate, Composite, Small, Black (6" W x 6" L)	1	1
6	B	1026880	Footplate, Composite, Medium, Black (7" W x 6" L)	1	1
6	C	1026881	Footplate, Composite, Large, Black (8" W x 6" L)	1	1
6	D	1026879	Footplate, Composite, Small, Black (6" W x 6" L)	1	1
6	E	1026880	Footplate, Composite, Medium, Black (7" W x 6" L)	1	1
6	F	1026881	Footplate, Composite, Large, Black (8" W x 6" L)	1	1

NOTE:
A - 13"-14" Wide
B - 15"-16" Wide
C - 17" and Wider
D - 15"-17" Wide
E - 18"-19" Wide
F - 20" and Wider

Pivot/Slide Tube and 1650, 1350 Aluminum Footplates

NOTE: Heel Loops are not included. See Footrest and Legrest Accessories
NOTE: For complete pivot/slide tube and footplate assemblies, see Front Riggings Reference Charts.

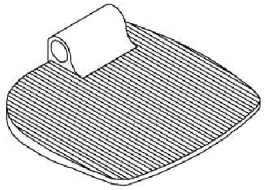

1350
Extra Large

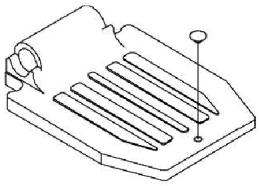

16"-24" Wide
1650 Standard Alum.

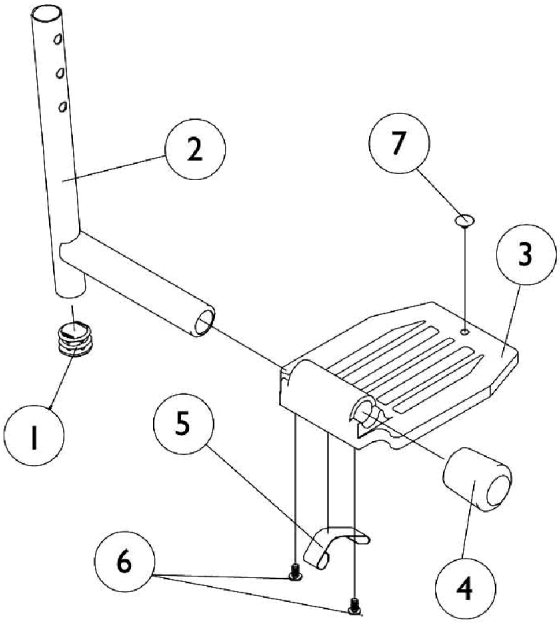

Pivot/Slide Tube and 1650, 1350 Aluminum Footplates

NOTE: Heel Loops are not included. See Footrest and Legrest Accessories

NOTE: For complete pivot/slide tube and footplate assemblies, see Front Riggings Reference Charts.

Item Number	Note	Part Number	Description	Quantity Per	
				Package	Assembly
1		1027097	Plug Button, Black (3/4")	1	1
2	A	1048834	Pivot/Slide Tube w/ Plug Button, Black	1	1
2	A	1098906	Pivot/Slide Tube w/ Plug Button, Black (2" Longer)	1	1
2	A	1086482	Pivot/Slide Tube w/ Plug Button, Black (4" Longer)	1	1
2	B	1041526	Pivot/Slide Tube w/ Plug Button Assembly, Chrome	1	1
2	C	1041526	Pivot/Slide Tube w/ Plug Button Assembly, Chrome	1	1
3		44200X027	Footplate, Aluminum, Medium, Black (7-3/4" W x 6" L)	1	1
3		44200X025	Footplate, Aluminum, Extra Large, Black - Right (8" W x 8-1/2" L)	1	1
3		44200X026	Footplate, Aluminum, Extra Large, Black - Left (8" W x 8-1/2" L)	1	1
4	D	1016346	Cap, End, Tube, Black (7/8")	1	1
4	E	1027095	Plug Button, Black (7/8")	1	1
5	D	1006981	Spring, Tension	1	2
5	E,F	1036123	Spring, Leaf	1	1
6		7930354-NLA	NLA - Package, Phillips Head Screw (#8-32 x 3/8")	25	2
7		1070168	Plug, Push, Footplate	1	1

NOTE:
A - Extra Large footplate for AT5544, 70, PHW93,
B - Extra Large footplate for PHAL4A
C - Standard Aluminum footplate for PHAL4
D - For Standard Aluminum footplate
E - For Extra Large footplate
F - Use one or more leaf springs per assembly as required such that footplate may be moved by hand to the up-right position and remain in place.

Adjustable Angle Footplate Assemblies - AT5543

70deg, 70deg MFX, PHW93, 90DEG, AT5544, PAL4A Swingaway Supports

NOTE: Heel loops are not included. See Footrest and Legrest Accessories.

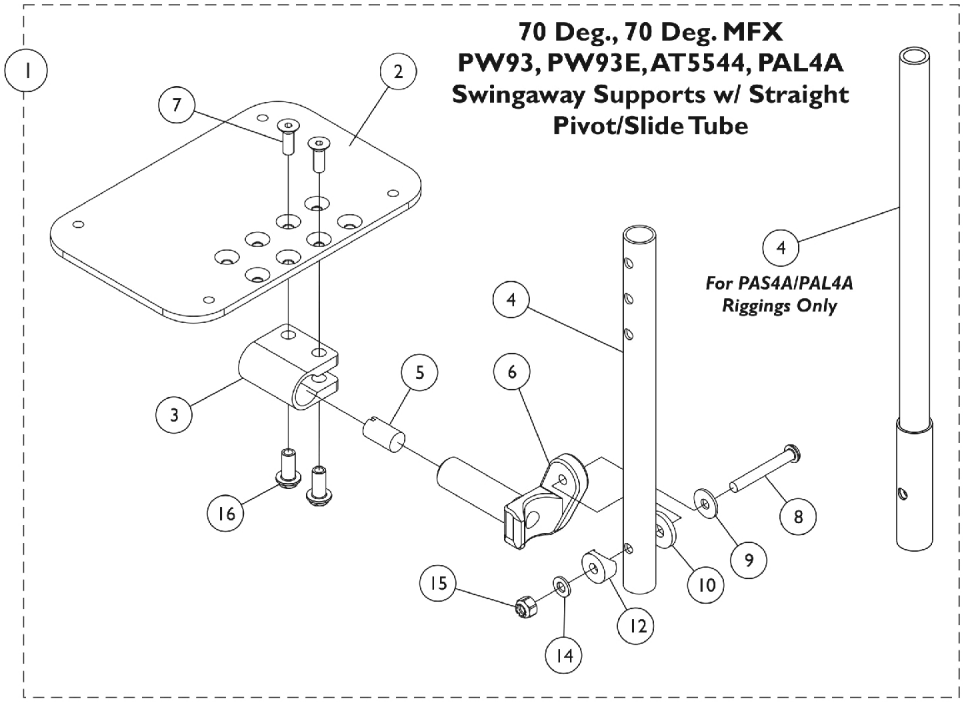

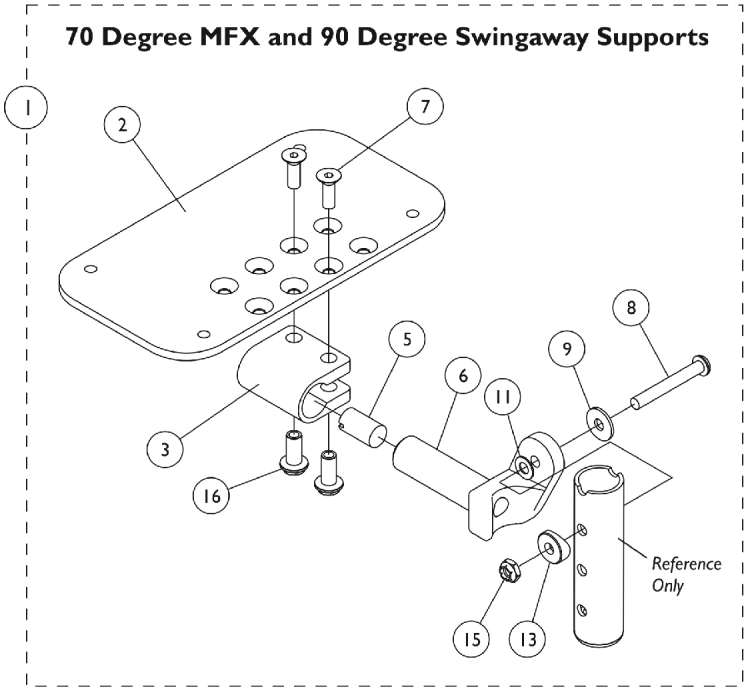

Adjustable Angle Footplate Assemblies - AT5543

70deg, 70deg MFX, PHW93, 90DEG, AT5544, PAL4A Swingaway Supports

NOTE: Heel loops are not included. See Footrest and Legrest Accessories.

Item Number	Note	Part Number	Description	Quantity Per Package	Quantity Per Assembly
1	A	See Chart	Pivot/Slide Tubes with Footplates Assemblies	1	1
2	B,F	1113572	Footplate, Adjustable Angle, Medium, Black (4-1/4" W x 8" L)	1	1
2	C,F	1113573	Footplate, Adjustable Angle, Large, Black (5-1/4" W x 8" L)	1	1
2	D,F	1113574	Footplate, Adjustable Angle, Extra Large, Black (6-1/4" W x 8" L)	1	1
3		1058517	Clamp, Footplate	1	1
4		1057855	Tube, Pivot and Slide, Straight, Steel, Black (9-7/8" L)	1	1
4		1057856	Tube, Pivot/Slide, Straight, Steel, Black (11-7/8" L)	1	1
4		1121135	Tube, Pivot/Slide, Straight, Steel, Black (13-7/8" L)	1	1
4	E	1091745-NLA	NLA - Tube, Pivot/Slide, Straight, Steel, Chrome (13-7/8" L)	1	1
5		1048816	Screw, Nylon Adjustment (1/2-13 x 7/8")	1	1
6		1052102	Hinge, Footplate - Right	1	1
6		1052103	Hinge, Footplate - Left	1	1
7		1029545	Screw, Socket Flat Head (1/4-20 x 3/4")	1	2
8		7930321-NLA	NLA Package, Screw, Socket Button Head (1/4-20 x 1-7/8")	25	1
9		1026900	Washer (1/4 x 23/32 x 1/16")	1	1
10		7930313	Package, Washer, Nylon (5/16 x 7/8 x 1/8")	25	1
11		1036435	Washer, Nylon (1/4 x 7/8 x 1/32")	1	1
12		1025457	Spacer, Coved (1/4 x 3/4 x 11/32")	1	1
13		1026099	Spacer, Coved (1/4 x 11/16 x 1/2")	1	1
14		1026907	Washer (1/4 x 1/2 x 1/16")	1	1
15		7930333	Locknut (1/4-20)	25	1
16		1082686	Nut, Barrel, Hex Head (1/4-20 x 11/16")	1	2

NOTE:
A - Includes Items 2 thru 16.
B - For 12-13" wide chairs
C - For 14-15" wide chairs
D - For 16" and wider chairs
E - For PHAL4A only.
F - The footplate design was revised 9/2/2008 with rounder corners and accessory holes changed from 8 to 4. Recommended to order in pairs to match sides.

#1 Pivot/ Slide Tube with Footplate Assemblies

Rigging Type	90 and 70MFX w/o Pivot/Slide Tube	70, PHW93, AT5544 (9-7/8" Tube)	70, PHW93, AT5544 (11-7/8" Tube)	70, PHW93, AT5544 (13-7/8" Tube)	PHAL4A (13-7/8" Tube)
12-13" W, Right (4-1/4" Footplate)	1060436-NLA	1060442	N/A	N/A	N/A

Adjustable Angle Footplate Assemblies - AT5543

70deg, 70deg MFX, PHW93, 90DEG, AT5544, PAL4A Swingaway Supports

NOTE: Heel loops are not included. See Footrest and Legrest Accessories.

#1 Pivot/ Slide Tube with Footplate Assemblies

Rigging Type	90 and 70MFX w/o Pivot/Slide Tube	70, PHW93, AT5544 (9-7/8" Tube)	70, PHW93, AT5544 (11-7/8" Tube)	70, PHW93, AT5544 (13-7/8" Tube)	PHAL4A (13-7/8" Tube)
12-13" W, Left (4-1/4" Footplate)	1060437	1060443	N/A	N/A	N/A
14-15" W, Right (5-1/4" Footplate)	1060438	1060444	1062758	1121138-NLA	1091775-NLA
14-15" W, Left (5-1/4" Footplate)	1060439	1060445	1062759	1121139-NLA	1091776-NLA
16" and Wider, Right (6-1/4" Footplate)	1062570	1062756	1062760	1121140	1091777-NLA
16" and Wider, Left (6-1/4" Footplate)	1062571	1062757	1062761	1121141	1091778-NLA

Footrest and Legrest Accessories

NOTE: Heel loops for Power Articulating Legrest located on Power Articulating Legrest page.

Item Number	Note	Part Number	Description	Quantity Per	
				Package	Assembly
	A	1032243	Strap, Calf w/ Hook and Loop (36" L)	1	1
	A,C	1032214	H-Strap (24" L)	1	1
	A,D	1032215	H-Strap (26" L)	1	1
	A,E	1032216	H-Strap (31" L)	1	1
	A,B	8881038231	Kit, 3" Extension w/ Hardware (Pair)	2	1
	A,F	1026987	Guard, Impact (8" L)	1	2
	A	See Chart	Heel Loops and Hardware (Not Including AT5543)	1	1
	A	See Chart	Attaching Hardware Part Numbers (Not Including AT5543)	1	1
	A	See Chart	AT5543 Heel Loops, Heel Loops w/ Ankle Straps and Hardware	1	1
	A	See Chart	Toe Loops and Hardware	1	1

NOTE: A - Not Shown
B - Specify frame color when ordering. See page titled "Frame Finishes and Touch-Up Paints".
C - 12-14" wide seats
D - 15-16" wide seats
E - 17" and wider seats
F - For 70 deg. Tapered Footrest.

Heel Loops and Hardware (Not Including AT5543)

Footplate Type	Chair Width	Heel Loop Single #	Heel Loop Pair #	Heel Loop w/ Ankle Strap Single # Rt.	Heel Loop w/ Ankle Strap Single # Lt.	Heel Loop w/ Ankle Strap Pair #	Attaching Hardware Pair #
Composite Small (1651)	12-14" W or 15-17" W Tapered	1028412-NLA	1035912-NLA	1035908-NLA	1035909-NLA	1035906	1035931-NLA
Composite Medium (1651)	15-16" W or 18-19" W Tapered	1017621	1035917-NLA	1035919	1035920	1035918	1035931-NLA
Composite Large (1651)	17-24" W or 20-24" W Tapered	1017621	1035917-NLA	1035932-NLA	1035933-NLA	1035930	1035931-NLA
Standard Aluminum (1650)	14-15" W	1025234-NLA	1035905	1035908-NLA	1035909-NLA	1035906	1035907
Standard Aluminum (1650)	16-24" W	1017621	1035917-NLA	1035919	1035920	1035918	1035907
X-Large Aluminum (1350)	16-24" W	1017621	1035917-NLA	1035919	1035920	1035918	1055241

Footrest and Legrest Accessories

NOTE: Heel loops for Power Articulating Legrest located on Power Articulating Legrest page.

Attaching Hardware Part Numbers (Not Including AT5543)

Footplate Type	Part Number	Part Number Consists of
Composite (1651)	1035931-NLA	(2) Screw, Phillips Pan Head (1/4-20 x 2-1/4") (2) Spacer (1/4 x 11/32 x 1-3/4") (2) Hex Nut w/ Nylon Cap (1/4-20) (2) Flat Washer (1/4 x 5/8 x 1/16")
Standard Aluminum (1650)	1035907	(2) Screw, Phillips Pan Head (1/4-20 x 2-1/2") (2) Spacer (2) Locknut (1/4-20)
X-Large Aluminum (1350)	1055241	(2) Screw, Phillips Pan Head (1/4-20 x 2-1/4") (2) Spacer (2) Locknut (1/4-20)

Footrest and Legrest Accessories

NOTE: Heel loops for Power Articulating Legrest located on Power Articulating Legrest page.

AT5543 Heel Loops, Heel Loops w/ Ankle Straps and Hardware

Footplate Type	Part Number	Part Number Consists of
AT5543 Adj. Angle	1160723 Kit, Heel Loop w/ Hardware, Adjustable Angle Footplate (Pair)	(2) Heel Loops (4) Screw, PPH (1/4-20 x 2-1/4") (4) Spacer (4) Locknut (1/4-20)
AT5543 Adj. Angle	1160724 Kit, Heel Loop w/ Ankle Strap and Hardware, Adjustable Angle Footplate (Pair)	(2) Heel Loops w/ Ankle Straps (4) Screw, PPH (1/4-20 x 2-1/4") (4) Spacer (4) Locknut (1/4-20)
Attaching Hardware Only	1035931-NLA NLA - Kit, Heel Loop Attaching Hardware (Pair)	(2) Screw, Phillips Pan Head (1/4-20 x 2-1/4") (2) Spacer (1/4 x 11/32 x 1-3/4") (2) Hex Nut w/ Nylon Cap (1/4-20) (2) Flat Washer (1/4 x 5/8 x 1/16")

Toe Loops (1345) and Attaching Hardware

Footplate Type	Toe Loop w/o Hardware Single #	Toe Loop w/o Hardware Pair #	Attaching Hardware Part Number	Attaching Hardware Consists of
1651, 1650, 1350, Footplates	04572X025	1037087	1037089	(4) Screw, PPH (10-32 x 7/8") (4) Washer (1/4 x 3/4 x 3/32") (4) Locknut (10-32)
AT5543 Footplates	04572X025	1037087	1104749	(4) Screw, PPH (10-32 x 1/2") (4) Washer (1/4 x 3/4 x 3/32")

Front Rigging - Center Mount Rigging CTMTJ/CTMT-FJ - Before 12/10/08

(CTMTJ/CTMT-FJ = 9-1/4" - 12" Range)

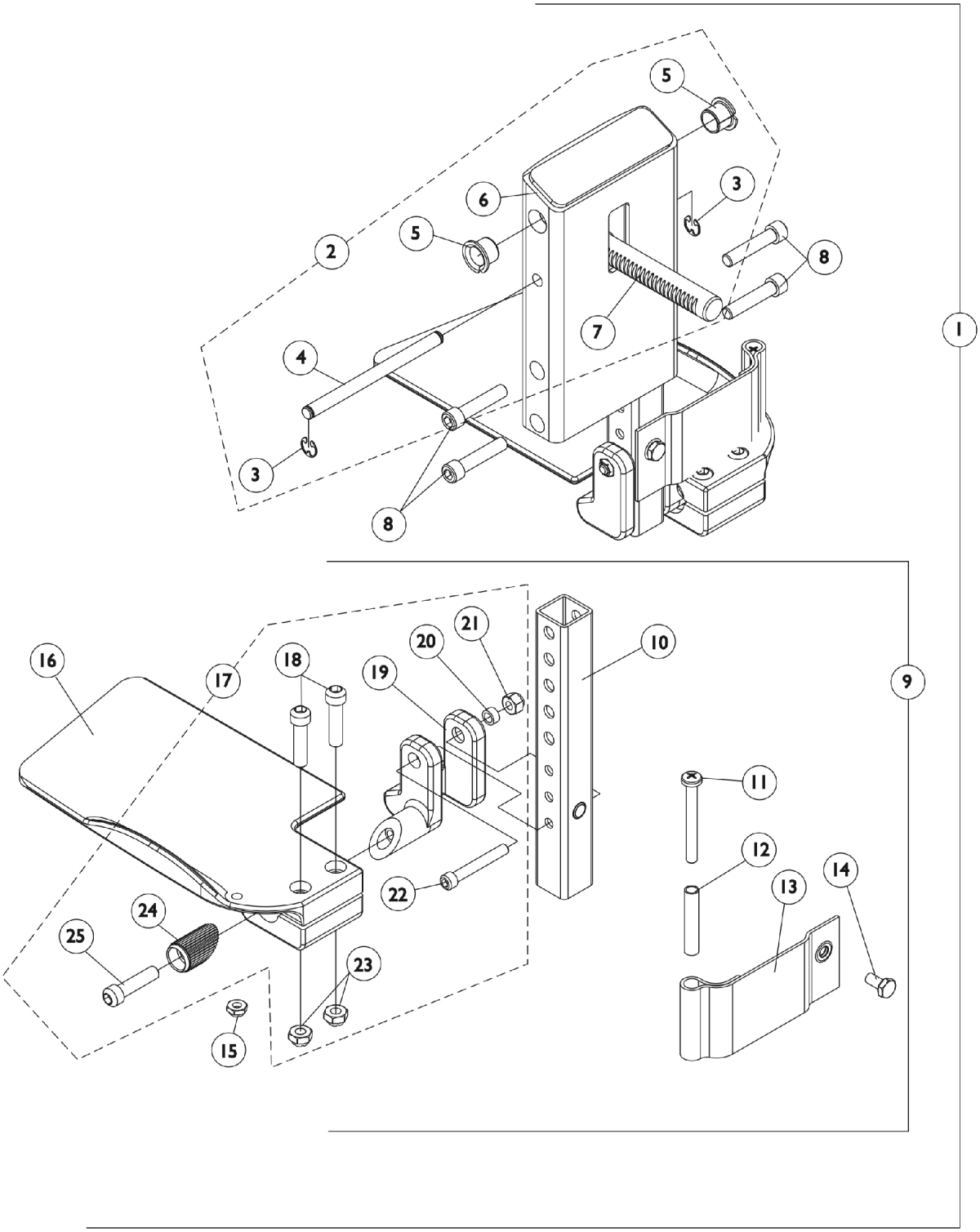

Front Rigging - Center Mount Rigging CTMTJ/CTMT-FJ - Before 12/10/08

(CTMTJ/CTMT-FJ = 9-1/4" - 12" Range)

Item Number	Note	Part Number	Description	Quantity Per	
				Package	Assembly
1	A	See Note	See Footnote	1	1
2	B	1123021-NLA	NLA - Legrest Support Assembly, Center Mount, Junior, Black	1	1
3		1113376-NLA	NLA - Ring, Retainer (1/4 x 1/2 x 1/64")	1	2
4		1113373-NLA	NLA - Pin, Angle, Adjustable, ASBA	1	1
5		1110669	Bearing, Flange (1/2 x 13/16 x 1/2")	1	2
6		1121984-NLA	NLA - Support, Junior Legrest (CTMTJ/CTMT-FJ)	1	1
7		1113372	Rack, Center Mount Rigging Angle Adjustable	1	1
8		1021344	Screw, Socket Head (5/16-18 x 1-1/2")	1	4
9	C	1123042-NLA	NLA - Extension Tube and Footplate Assembly w/ Heel Loop, Junior - Right	1	1
9	C	1123043-NLA	NLA - Extension Tube and Footplate Assembly w/ Heel Loop, Junior - Left	1	1
10		1123044	Tube, Footrest Extension, Short (CTMTJ/CTMT-FJ = 9-1/4 - 12") (CTMT/CTMT-F = 12-1/4 - 15") (PCTMT = 10 - 13")	1	1
11		1021421-NLA	NLA - Screw, Phillips Pan Head (1/4-20 x 2-1/4")	1	2
12		1006477-NLA	NLA - Spacer (1/4 x 11/32 x 1-3/4")	1	2
13		1121996-NLA	NLA - Heel Loop, Center Mount Rigging	1	2
14		1078214	Screw, Hex Head w/ Patch (1/4-20 x 1/2")	1	2
15		1025195	Locknut (1/4-20)	1	2
16	E	1121988-NLA	NLA - Footplate, CTMTJ/CTMT-FJ - Right (5-1/4" W x 8-13/16" L)	1	1
16	E	1121989-NLA	NLA - Footplate, CTMTJ/CTMT-FJ - Left (5-1/4" W x 8-13/16" L)	1	1
17	D	1120345-NLA	NLA - Center Mount Rigging Footplate Mounting Hardware - Right	1	1
17	D	1121123-NLA	NLA - Center Mount Rigging Footplate Mounting Hardware - Left	1	1
18		1021343	Screw, Socket Head (5/16-18 x 1-1/4")	1	2
19		1113384-NLA	NLA - Hinge, Adjustable Angle - Right	1	1
19		1113385-NLA	NLA - Hinge, Adjustable Angle - Left	1	1
20		1047449-NLA	NLA - Spacer (1/4 x 3/8 x 3/16")	1	1
21		1065362	Locknut (1/4-28)	1	1
22		1096810	Screw, Socket Head (1/4-28 x 1-3/4")	1	1
23		1108122-NLA	NLA - Locknut (5/16-18)	1	2
24		1113530	Attachment, Hinge	1	1
25		1021343	Screw, Socket Head (5/16-18 x 1-1/4")	1	1

NOTE:
A - As of 12/10/08, item 1 is no longer available. Individual parts may be ordered separately.
B - Includes items 3-7
C - Includes items 10-16 & 17
D - Includes items 18-25
E - Item #16 - Footplate design revised 2/28/07 to accommodate items 18 & 23. Replace footplates in pairs and order new footplate hardware for chairs mfg. before 2/28/07.

Front Rigging - Center Mount Rigging (CTMT/CTMT-F/CTMT-L/CTMT-FL) - Before 12/10/08

(CTMT/CTMT-F = 12-1/4" - 15" Range) & (CTMT-L/CTMT-FL = 16" - 18-3/4" Range)

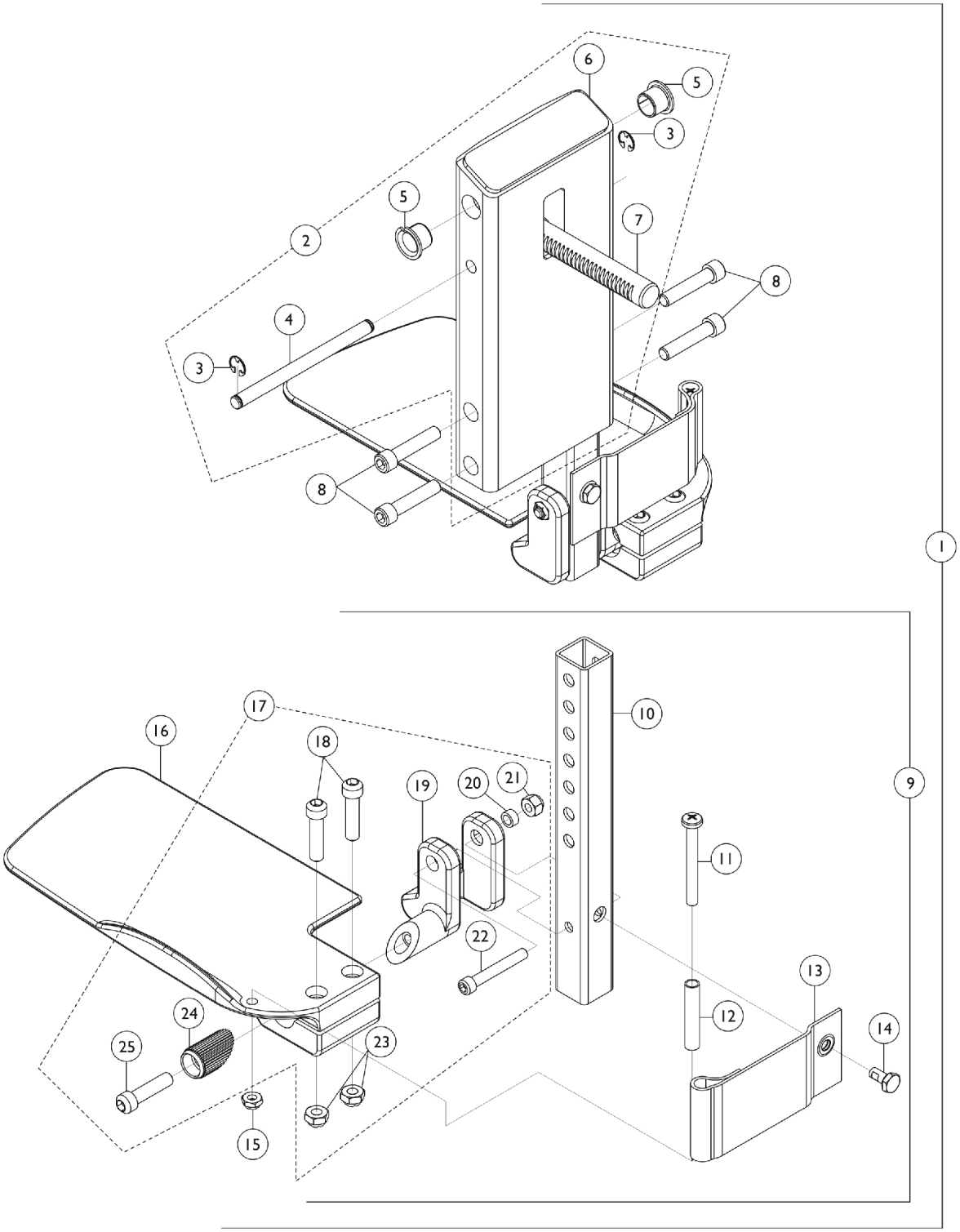

Front Rigging - Center Mount Rigging (CTMT/CTMT-F/CTMT-L/CTMT-FL) - Before 12/10/08

(CTMT/CTMT-F = 12-1/4" - 15" Range) & (CTMT-L/CTMT-FL = 16" - 18-3/4" Range)

Item Number	Note	Part Number	Description	Quantity Per	
				Package	Assembly
1	A	See Note	See Footnote	1	1
2	B	1120346-NLA	NLA - Legrest Support Assembly, Center Mount, Black	1	1
3		1113376-NLA	NLA - Ring, Retainer (1/4 x 1/2 x 1/64")	1	2
4		1113373-NLA	NLA - Pin, Angle, Adjustable, ASBA	1	1
5		1110669	Bearing, Flange (1/2 x 13/16 x 1/2")	1	2
6	F	1113609-NLA	NLA - Support, Center Mount Rigging Legrest, Black	1	1
7		1113372	Rack, Center Mount Rigging Angle Adjustable	1	1
8		1021344	Screw, Socket Head (5/16-18 x 1-1/2")	1	4
9	C	1123034-NLA	NLA - Extension Tube and Footplate Assembly w/ Heel Loop, Short - Right	1	1
9	C	1123035-NLA	NLA - Extension Tube and Footplate Assembly w/ Heel Loop, Short - Left	1	1
9	C	1123036-NLA	NLA - Extension Tube and Footplate Assembly w/ Heel Loop, Long - Right	1	1
9	C	1123037-NLA	NLA - Extension Tube and Footplate Assembly w/ Heel Loop, Long - Left	1	1
10		1123044	Tube, Footrest Extension, Short (CTMTJ/CTMT-FJ = 9-1/4 - 12") (CTMT/CTMT-F = 12-1/4 - 15") (PCTMT = 10 - 13")	1	1
10		1123045-NLA	NLA - Tube, Footrest Extension, Long (CTMT-L/CTMT-FL = 16 - 18-3/4") (PCTMT-L = 1 - 17")	1	1
11		1021421-NLA	NLA - Screw, Phillips Pan Head (1/4-20 x 2-1/4")	1	2
12		1006477-NLA	NLA - Spacer (1/4 x 11/32 x 1-3/4")	1	2
13		1121996-NLA	NLA - Heel Loop, Center Mount Rigging	1	2
14		1078214	Screw, Hex Head w/ Patch (1/4-20 x 1/2")	1	2
15		1025195	Locknut (1/4-20)	1	2
16	E	1113606-NLA	NLA - Footplate, Center Mount Rigging, Black - Right (5-1/4" W x 9-5/8" L)	1	1
16	E	1113607-NLA	NLA - Footplate, Center Mount Rigging, Black - Left (5-1/4" W x 9-5/8" L)	1	1
17	D	1120345-NLA	NLA - Center Mount Rigging Footplate Mounting Hardware - Right	1	1
17	D	1121123-NLA	NLA - Center Mount Rigging Footplate Mounting Hardware - Left	1	1
18		1021343	Screw, Socket Head (5/16-18 x 1-1/4")	1	2
19		1113384-NLA	NLA - Hinge, Adjustable Angle - Right	1	1
19		1113385-NLA	NLA - Hinge, Adjustable Angle - Left	1	1
20		1047449-NLA	NLA - Spacer (1/4 x 3/8 x 3/16")	1	1
21		1065362	Locknut (1/4-28)	1	1

Front Rigging - Center Mount Rigging (CTMT/CTMT-F/CTMT-L/CTMT-FL) - Before 12/10/08

(CTMT/CTMT-F = 12-1/4" - 15" Range) & (CTMT-L/CTMT-FL = 16" - 18-3/4" Range)

Item Number	Note	Part Number	Description	Quantity Per	
				Package	Assembly
22		1096810	Screw, Socket Head (1/4-28 x 1-3/4")	1	1
23		1108122-NLA	NLA - Locknut (5/16-18)	1	2
24		1113530	Attachment, Hinge	1	1
25		1021343	Screw, Socket Head (5/16-18 x 1-1/4")	1	1

NOTE:
A - As of 12/10/08, item 1 is no longer available. Individual parts may be ordered separately.
B - Includes items 3-7
C - Includes items 10-16 & 17
D - Includes items 18-25
E - Item #16 - Footplate design revised 2/28/07 to accommodate items 18 & 23. Replace footplates in pairs and order new footplate hardware for chairs mfg. before 2/28/07.
F - No Longer Available individually. See part # 1123046 for replacement.

Front Rigging - Center Mount Rigging (CTMT-F/CTMT-FL with CTMTFB One PC Flip-Up Footboard) - Before 12/10/08

(CTMT-F = 12-1/4" - 15" Range) & (CTMT-FL = 16" - 18-3/4" Range)

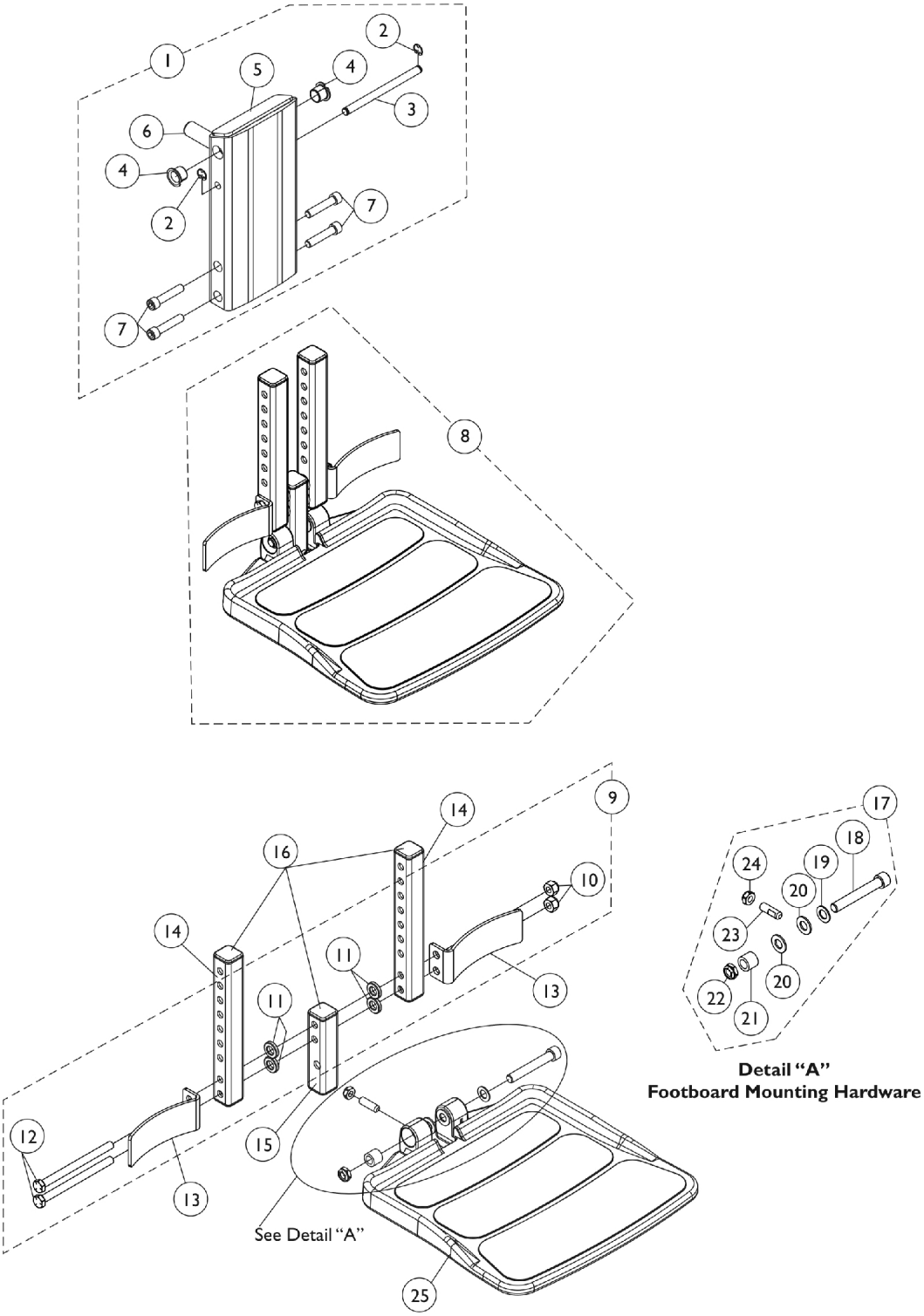

Front Rigging - Center Mount Rigging (CTMT-F/CTMT-FL with CTMTFB One PC Flip-Up Footboard) - Before 12/10/08

(CTMT-F = 12-1/4" - 15" Range) & (CTMT-FL = 16" - 18-3/4" Range)

Item Number	Note	Part Number	Description	Quantity Per	
				Package	Assembly
1	A	1148725-NLA	NLA - Legrest Support Assembly, Center Mount Rigging	1	1
2			NLA - Ring, Retainer (1/4 x 1/2 x 1/64")	1	2
3			NLA - Pin, Angle, Adjustable, ASBA	1	1
4			Bearing, Flange (1/2 x 13/16 x 1/2")	1	2
5			NLA - Support, Center Mount Rigging Legrest, Black	1	1
6			Rack, Center Mount Rigging Angle Adjustable	1	1
7			Screw, Socket Head (5/16-18 x 1-1/2")	1	4
7		1021344	Screw, Socket Head (5/16-18 x 1-1/2")	1	4
8	B	1148722-NLA	NLA - Footboard Assembly, CTMTFB (For CTMT-F 12-1/4 - 15" & PCTMT 10 - 13")	1	1
8	B	1148724-NLA	NLA - Footboard Assembly, Long, CTMTFB (For CTMT-FL 16 - 18-3/4" & PCTMT-L 14 - 17")	1	1
9	C	1144608-NLA	NLA - Kit, Heel Stop and Extension Tube Mounting Hardware	1	1
10			Locknut (5/16-18)	1	2
11			NLA - Bushing, Actuator Motor (3/8 x 3/4 x 5/32")	1	4
12			NLA - Screw, Hex Head (5/16-18 x 4")	1	2
13	F	1153789	Bracket, Heel Stop, Black	1	2
14	G	1148711-NLA	NLA - Tube, Extension, Black 104355- Short (For CTMT-F 12-1/4" - 15" Range & PCTMT 10"-13" Range)	1	2
14	G	1148721-NLA	NLA - Tube, Extension - Long (For CTMT-FL 16" - 18-3/4" Range & PCTMT-L 14"-17" Range)	1	2
15	D	1144607-NLA	NLA - Tube, Vertical Support with Caps	1	1
16		1144609	Package, End Cap (1" Square)	10	1
17	E	1147134	Kit, Footboard Mounting Hardware	1	1
18			Screw, Socket Head (3/8-16 x 2-1/2")	1	1
19			Washer, Flat (3/8 x 11/16 x 1/16")	1	1
20			Washer, Nylon (3/8 x 3/4 x 1/16")	1	2
21			Bushing (3/8 x 5/8 x 1/2")	1	1
22			Locknut, Low Profile (3/8-16)	1	1
23			Screw, Set Socket Flat Point (5/16-18 x 1")	1	1
24			Locknut (5/16-18)	1	1
25		1114311	Footboard w/ Cover (11-1/4" W x 11-1/2" L)	1	1

NOTE:
A - Includes items 2-7
B - Includes items 9, 13, 14, 15, 17 and 25
C - Includes items 10-12
D - Extension Tube and Vertical Support Tube includes Tube Caps at both ends
E - Includes items 18-24
F - Heel Stop Bracket was revised 2/6/08. It is recommended to order in pairs to match for chairs manufactured before 2/6/08.
G - End Caps are no longer used or required for the extension tube as of 4/9/08

Front Rigging - Center Mount Rigging (CTMT-F with CTMTFB One PC Flip-Up Footboard)

(CTMT-F = 11" - 15" Range)

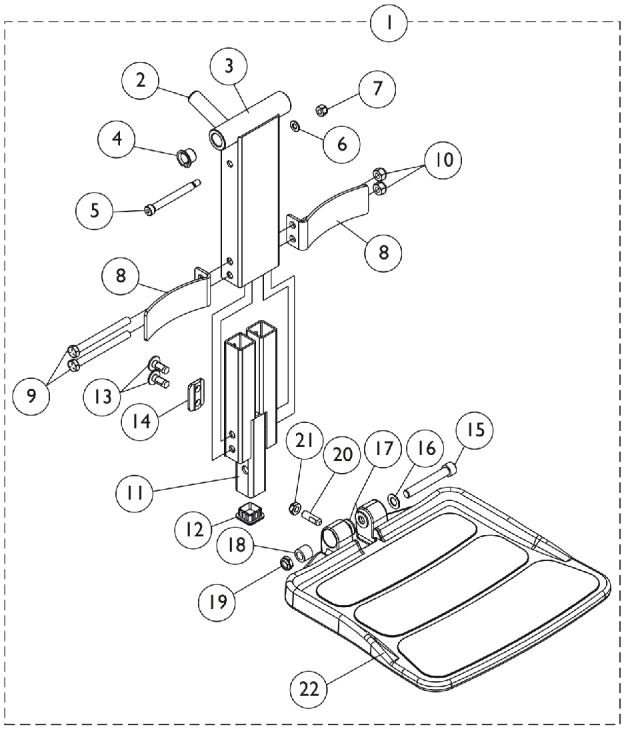

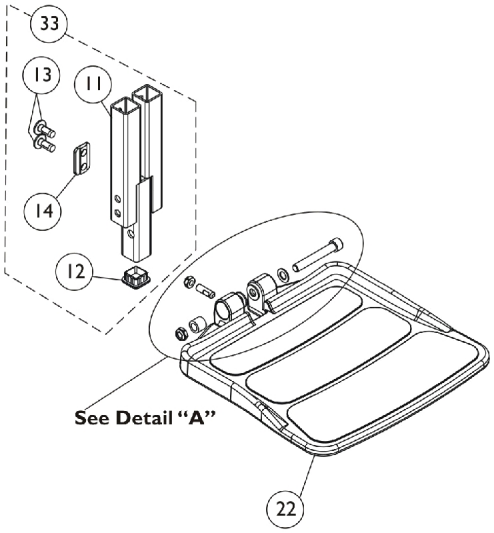

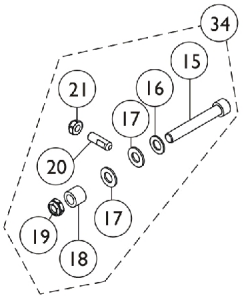

Detail "A"
Footboard Mounting
Hardware

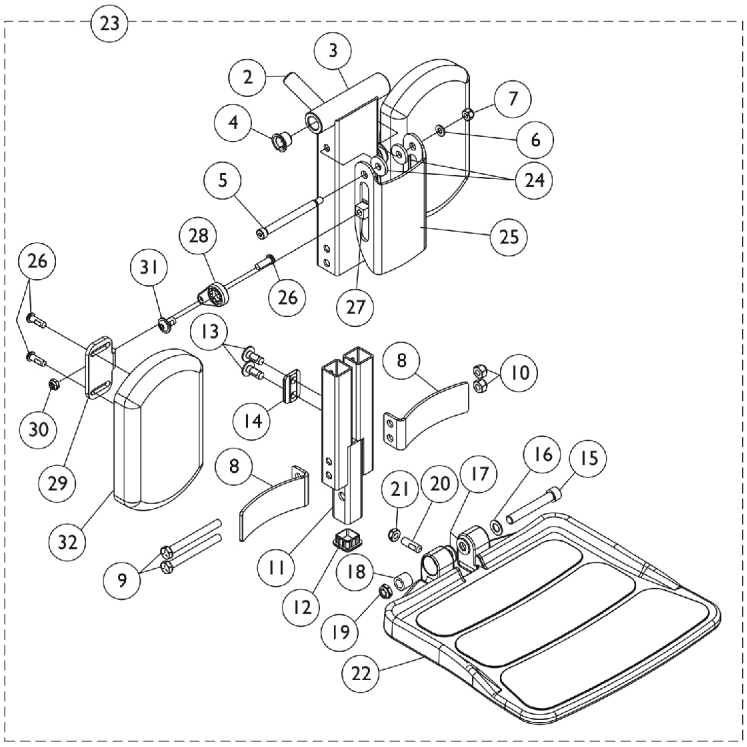

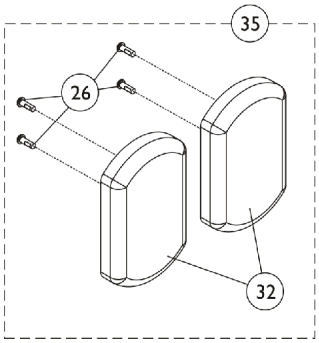

Front Rigging - Center Mount Rigging (CTMT-F with CTMTFB One PC Flip-Up Footboard)

(CTMT-F = 11" - 15" Range)

Item Number	Note	Part Number	Description	Quantity Per	
				Package	Assembly
1	A	1165388	Center Mount Front Rigging w/ One PC Footboard (11" - 15" Range)	1	1
2			Rack, Center Mount Rigging Angle Adjustable	1	1
3			Support, Footrest, Center Mount, Black - Regular	1	1
4			Bearing, Flange (1/2 x 13/16 x 1/2")	1	2
5			Screw, Shoulder Hex Socket Head (5/16" x 2-1/2", 1/4-20)	1	1
6			Washer (1/4 x 1/2 x 1/16")	1	1
7			Locknut (1/4-20)	1	1
8			Bracket, Heel Stop, Black	1	2
9			NLA - Screw, Hex Head (5/16-18 x 3-1/4")	1	2
10			Locknut (5/16-18)	1	2
11			Footboard Extension Assembly, Black (11" - 15" Range)	1	1
12			Plug Button, Black (1" Square)	1	1
13			Screw, Socket, Button Head w/ Patch (5/16-18 x 3/4")	1	4
14			Cleat, Button Head	1	2
15			Screw, Socket Head (3/8-16 x 2-1/2")	1	1
16			Washer, Flat (3/8 x 11/16 x 1/16")	1	1
17			Washer, Nylon (3/8 x 3/4 x 1/16")	1	2
18			Bushing (3/8 x 5/8 x 1/2")	1	1
19			Locknut, Low Profile (3/8-16)	1	1
20			Screw, Set Socket Flat Point (5/16-18 x 1")	1	1
21			Locknut (5/16-18)	1	1
22			Footboard w/ Cover (11-1/4" W x 11-1/2" L)	1	1
23	B	1165389	Center Mount Front Rigging w/ One PC Footboard & Calf Pads (11" - 15" Range)	1	1
2			Rack, Center Mount Rigging Angle Adjustable	1	1
3			Support, Footrest, Center Mount, Black - Regular	1	1
4			Bearing, Flange (1/2 x 13/16 x 1/2")	1	2
5			Screw, Shoulder Hex Socket Head (5/16" x 3", 1/4-20)	1	1
6			Washer (1/4 x 1/2 x 1/16")	1	1
7			Locknut (1/4-20)	1	1
8			Bracket, Heel Stop, Black	1	2
9			NLA - Screw, Hex Head (5/16-18 x 3")	1	2
10			Locknut (5/16-18)	1	2
11			Footboard Extension Assembly, Black (11" - 15" Range)	1	1
12			Plug Button, Black (1" Square)	1	1
13			Screw, Socket, Button Head w/ Patch (5/16-18 x 3/4")	1	4

Front Rigging - Center Mount Rigging (CTMT-F with CTMTFB One PC Flip-Up Footboard)

(CTMT-F = 11" - 15" Range)

Item Number	Note	Part Number	Description	Quantity Per	
				Package	Assembly
14			Cleat, Button Head	1	2
15			Screw, Socket Head (3/8-16 x 2-1/2")	1	1
16			Washer, Flat (3/8 x 11/16 x 1/16")	1	1
17			Washer, Nylon (3/8 x 3/4 x 1/16")	1	2
18			Bushing (3/8 x 5/8 x 1/2")	1	1
19			Locknut, Low Profile (3/8-16)	1	1
20			Screw, Set Socket Flat Point (5/16-18 x 1")	1	1
21			Locknut (5/16-18)	1	1
22			Footboard w/ Cover (11-1/4" W x 11-1/2" L)	1	1
24			Washer, Nylon (5/16 x 7/8 x 1/8")	1	2
25			Bracket, Calf Pad, Black	1	1
26			Screw, Socket Button Head w/ Patch (1/4-20 x 3/4")	1	6
27			Nut, T (5/16-18)	1	2
28			Adjuster, Calf Pad	1	2
29			Bracket, Mounting, Calf Pad	1	2
30			Locknut (1/4-20)	1	2
31			Screw, Socket, Button Head w/ Patch (5/16-18 x 1/2")	1	2
32			Pad, Calf (4-1/2" W x 7-1/4" L)	1	2
33	C	1166067	Kit, Footboard Extension Assembly (11" - 15" Range)	1	1
11			Footboard Extension Assembly, Black (11" - 15" Range)	1	1
12			Plug Button, Black (1" Square)	1	1
13			Screw, Socket, Button Head w/ Patch (5/16-18 x 3/4")	1	4
14			Cleat, Button Head	1	2
34	D	1147134	Kit, Footboard Mounting Hardware	1	1
15			Screw, Socket Head (3/8-16 x 2-1/2")	1	1
16			Washer, Flat (3/8 x 11/16 x 1/16")	1	1
17			Washer, Nylon (3/8 x 3/4 x 1/16")	1	2
18			Bushing (3/8 x 5/8 x 1/2")	1	1
19			Locknut, Low Profile (3/8-16)	1	1
20			Screw, Set Socket Flat Point (5/16-18 x 1")	1	1
21			Locknut (5/16-18)	1	1
22		1114311	Footboard w/ Cover (11-1/4" W x 11-1/2" L)	1	1
35	E	1163373	Kit, Calf Pad (Pair)	1	1
26			Pad, Calf (4-1/2" W x 7-1/4" L)	1	2
32			Screw, Socket Button Head w/ Patch (1/4-20 x 3/4")	1	4
	F	1165506	Kit, Bracket, Calf Pad Mounting w/ Hardware	1	1
5			Screw, Shoulder Hex Socket Head (5/16" x 3", 1/4-20)	1	1
6			Washer (1/4 x 1/2 x 1/16")	1	1

Front Rigging - Center Mount Rigging (CTMT-F with CTMTFB One PC Flip-Up Footboard)

(CTMT-F = 11" - 15" Range)

Item Number	Note	Part Number	Description	Quantity Per	
				Package	Assembly
7			Locknut (1/4-20)	1	1
24			Washer, Nylon (5/16 x 7/8 x 1/8")	1	2
25			Bracket, Calf Pad, Black	1	1
	G	1165505	Kit, Hardware, Calf Pad Adjustment	1	1
26			Screw, Socket Button Head w/ Patch (1/4-20 x 3/4")	1	2
27			Nut, T (5/16-18)	1	2
28			Adjuster, Calf Pad	1	2
29			Bracket, Mounting, Calf Pad	1	2
30			Locknut (1/4-20)	1	2
31			Screw, Socket, Button Head w/ Patch (5/16-18 x 1/2")	1	2

NOTE:
A - Includes items 2-22
B - Includes items 2-22 and 24-32
C - Includes items 11-14
D - Includes items 15-21
E - Includes items 26 and 32
F - Not shown. Includes items 5-7, 24 and 25
G - Not shown. Includes items 26-31

Center Mount Front Rigging
(After 12/09/08)
(CTMT-J/CTMT-FJ/CTMT/CTMT-F/CTMT-L/CTMT-FL)

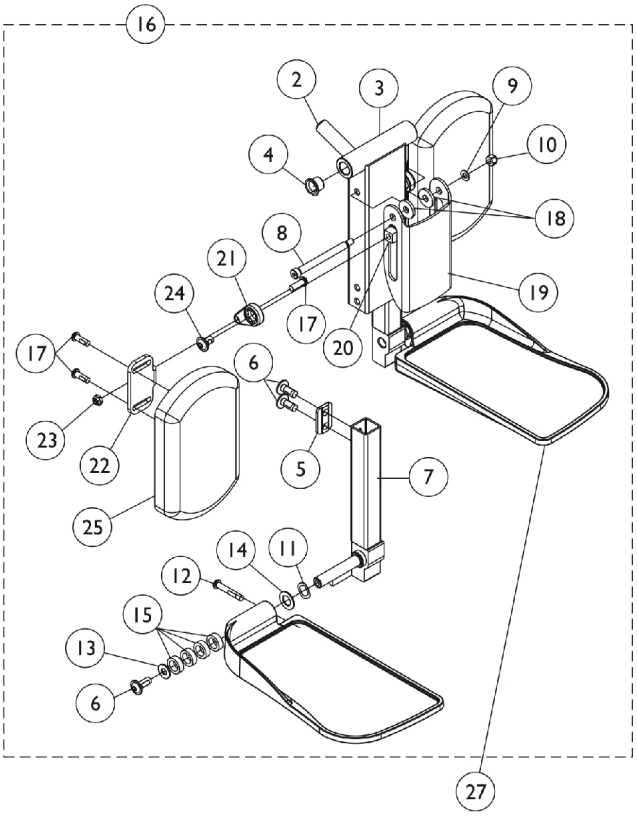

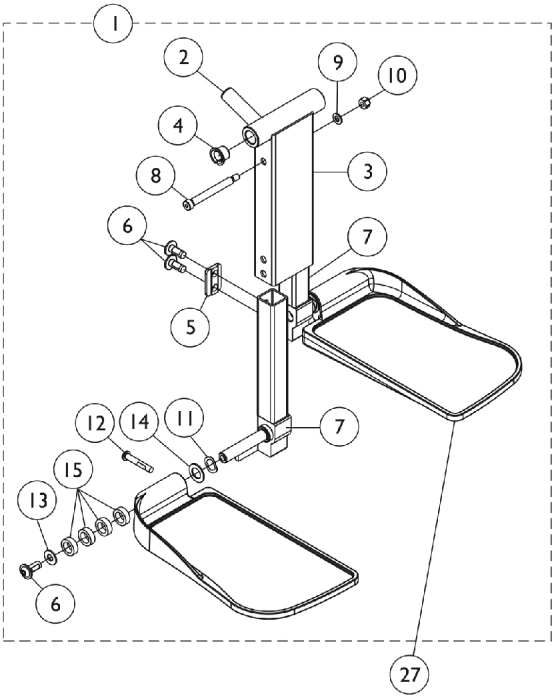

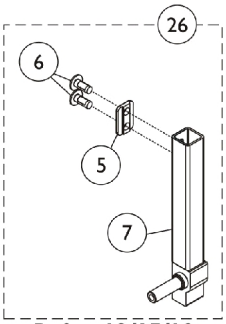

Before12/15/10

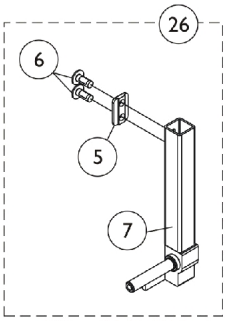

After 12/14/10

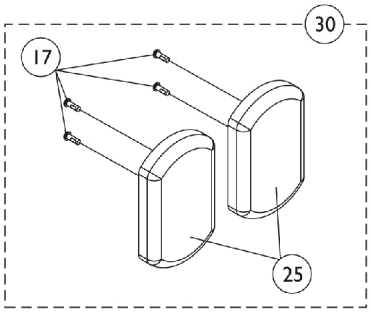

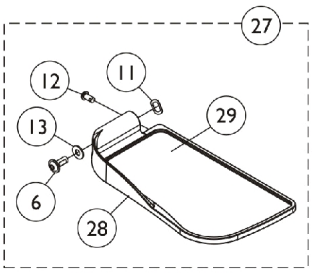

Before12/15/10

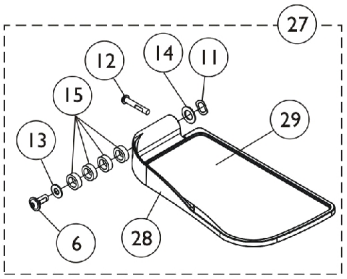

After 12/14/10

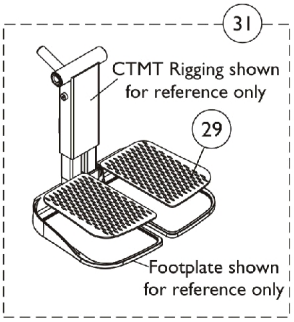

Center Mount Front Rigging
(After 12/09/08)
(CTMT-J/CTMT-FJ/CTMT/CTMT-F/CTMT-L/CTMT-FL)

Item Number	Note	Part Number	Description	Quantity Per	
				Package	Assembly
1	A	1121990	Kit, Center Mount Front Rigging, Junior (CTMTJ/CTMT-FJ) ASBA/ADJASBA (9-1/2" - 11" Range)	1	1
2			Rack, Center Mount Rigging Angle Adjustable	1	1
3			Support, Footrest, Center Mount, Black - Short	1	1
4			Bearing, Flange (1/2 x 13/16 x 1/2")	1	2
5			Cleat, Button Head	1	2
6			Screw, Socket, Button Head w/ Patch (5/16-18 x 3/4")	1	6
7			Tube, Extension, Footrest, Short, Black - Right	1	1
7			Tube, Extension, Footrest, Short, Black - Left	1	1
8			Screw, Shoulder Hex Socket Head (5/16" x 2-1/2", 1/4-20)	1	1
9			Washer (1/4 x 1/2 x 1/16")	1	1
10			Locknut (1/4-20)	1	1
11			NLA - Washer, Wave (17/32 x 3/4 x 1/64")	1	2
12			Screw, Socket Button Head (1/4-20 x 1-1/2")	1	2
13			Washer, Nylon (5/16 x 11/16 x 1/16")	1	2
14			Washer (1/2 x 7/8 x 3/64")	1	2
15			Spacer, Nylon (1/2 x 3/4 x 1/4")	1	8
1	A	1117262	Kit, Center Mount Front Rigging (CTMT) (CTMT-F), ASBA/ADJASBA (11" - 15" Range)	1	1
2			Rack, Center Mount Rigging Angle Adjustable	1	1
3			Support, Footrest, Center Mount, Black - Regular	1	1
4			Bearing, Flange (1/2 x 13/16 x 1/2")	1	2
5			Cleat, Button Head	1	2
6			Screw, Socket, Button Head w/ Patch (5/16-18 x 3/4")	1	6
7			Tube, Extension, Footrest, Medium, Black - Right	1	1
7			Tube, Extension, Footrest, Medium, Black - Left	1	1
8			Screw, Shoulder Hex Socket Head (5/16" x 2-1/2", 1/4-20)	1	1
9			Washer (1/4 x 1/2 x 1/16")	1	1
10			Locknut (1/4-20)	1	1
11			NLA - Washer, Wave (17/32 x 3/4 x 1/64")	1	2
12			Screw, Socket Button Head (1/4-20 x 1-1/2")	1	2
13			Washer, Nylon (5/16 x 11/16 x 1/16")	1	2
14			Washer (1/2 x 7/8 x 3/64")	1	2
15			Spacer, Nylon (1/2 x 3/4 x 1/4")	1	8
1	A	1117263	Kit, Center Mount Front Rigging (CTMT-L) (CTMT-FL), ASBA/ADJASBA (14" - 18" Range)	1	1
2			Rack, Center Mount Rigging Angle Adjustable	1	1
3			Support, Footrest, Center Mount, Black - Regular	1	1

Center Mount Front Rigging
(After 12/09/08)
(CTMT-J/CTMT-FJ/CTMT/CTMT-F/CTMT-L/CTMT-FL)

Item Number	Note	Part Number	Description	Quantity Per	
				Package	Assembly
4			Bearing, Flange (1/2 x 13/16 x 1/2")	1	2
5			Cleat, Button Head	1	2
6			Screw, Socket, Button Head w/ Patch (5/16-18 x 3/4")	1	6
7			Tube, Extension, Footrest, Long, Black - Right	1	1
7			Tube, Extension, Footrest, Long, Black - Left	1	1
8			Screw, Shoulder Hex Socket Head (5/16" x 2-1/2", 1/4-20)	1	1
9			Washer (1/4 x 1/2 x 1/16")	1	1
10			Locknut (1/4-20)	1	1
11			NLA - Washer, Wave (17/32 x 3/4 x 1/64")	1	2
12			Screw, Socket Button Head (1/4-20 x 1-1/2")	1	2
13			Washer, Nylon (5/16 x 11/16 x 1/16")	1	2
14			Washer (1/2 x 7/8 x 3/64")	1	2
15			Spacer, Nylon (1/2 x 3/4 x 1/4")	1	8
16	B	1161428	Kit, Center Mount Front Rigging w/Calf Pad - Short (CTMTJ/CTMT-FJ) ASBA/ADJASBA (9-1/2" - 11" Range)	1	1
2			Rack, Center Mount Rigging Angle Adjustable	1	1
3			Support, Footrest, Center Mount, Black - Short	1	1
4			Bearing, Flange (1/2 x 13/16 x 1/2")	1	2
5			Cleat, Button Head	1	2
6			Screw, Socket, Button Head w/ Patch (5/16-18 x 3/4")	1	6
7			Tube, Extension, Footrest, Short, Black - Right	1	1
7			Tube, Extension, Footrest, Short, Black - Left	1	1
8			Screw, Shoulder Hex Socket Head (5/16" x 3", 1/4-20)	1	1
9			Washer (1/4 x 1/2 x 1/16")	1	1
10			Locknut (1/4-20)	1	1
11			NLA - Washer, Wave (17/32 x 3/4 x 1/64")	1	2
12			Screw, Socket Button Head (1/4-20 x 1-1/2")	1	2
13			Washer, Nylon (5/16 x 11/16 x 1/16")	1	2
14			Washer (1/2 x 7/8 x 3/64")	1	2
15			Spacer, Nylon (1/2 x 3/4 x 1/4")	1	8
17			Screw, Socket Button Head w/ Patch (1/4-20 x 3/4")	1	6
18			Washer, Nylon (5/16 x 7/8 x 1/8")	1	2
19			Bracket, Calf Pad, Black	1	1
20			Nut, T (5/16-18)	1	2
21			Adjuster, Calf Pad	1	2
22			Bracket, Mounting, Calf Pad	1	2
23			Locknut (1/4-20)	1	2

Center Mount Front Rigging
(After 12/09/08)
(CTMT-J/CTMT-FJ/CTMT/CTMT-F/CTMT-L/CTMT-FL)

Item Number	Note	Part Number	Description	Quantity Per	
				Package	Assembly
24			Screw, Socket, Button Head w/ Patch (5/16-18 x 1/2")	1	2
25			Pad, Calf (4-1/2" W x 7-1/4" L)	1	2
16	B	1161429	Kit, Center Mount Front Rigging w/Calf Pad - Medium (CTMT) (CTMT-F), ASBA/ADJASBA (11" - 15" Range)	1	1
2			Rack, Center Mount Rigging Angle Adjustable	1	1
3			Support, Footrest, Center Mount, Black - Regular	1	1
4			Bearing, Flange (1/2 x 13/16 x 1/2")	1	2
5			Cleat, Button Head	1	2
6			Screw, Socket, Button Head w/ Patch (5/16-18 x 3/4")	1	6
7			Tube, Extension, Footrest, Medium, Black - Right	1	1
7			Tube, Extension, Footrest, Medium, Black - Left	1	1
8			Screw, Shoulder Hex Socket Head (5/16" x 3", 1/4-20)	1	1
9			Washer (1/4 x 1/2 x 1/16")	1	1
10			Locknut (1/4-20)	1	1
11			NLA - Washer, Wave (17/32 x 3/4 x 1/64")	1	2
12			Screw, Socket Button Head (1/4-20 x 1-1/2")	1	2
13			Washer, Nylon (5/16 x 11/16 x 1/16")	1	2
14			Washer (1/2 x 7/8 x 3/64")	1	2
15			Spacer, Nylon (1/2 x 3/4 x 1/4")	1	8
17			Screw, Socket Button Head w/ Patch (1/4-20 x 3/4")	1	6
18			Washer, Nylon (5/16 x 7/8 x 1/8")	1	2
19			Bracket, Calf Pad, Black	1	1
20			Nut, T (5/16-18)	1	2
21			Adjuster, Calf Pad	1	2
22			Bracket, Mounting, Calf Pad	1	2
23			Locknut (1/4-20)	1	2
24			Screw, Socket, Button Head w/ Patch (5/16-18 x 1/2")	1	2
25			Pad, Calf (4-1/2" W x 7-1/4" L)	1	2
16	B	1161430	Kit, Center Mount Front Rigging w/Calf Pad - Long (CTMT-L) (CTMT-FL), ASBA/ADJASBA (14" - 18" Range)	1	1
2			Rack, Center Mount Rigging Angle Adjustable	1	1
3			Support, Footrest, Center Mount, Black - Regular	1	1
4			Bearing, Flange (1/2 x 13/16 x 1/2")	1	2
5			Cleat, Button Head	1	2
6			Screw, Socket, Button Head w/ Patch (5/16-18 x 3/4")	1	6

Center Mount Front Rigging
(After 12/09/08)
(CTMT-J/CTMT-FJ/CTMT/CTMT-F/CTMT-L/CTMT-FL)

Item Number	Note	Part Number	Description	Quantity Per	
				Package	Assembly
7			Tube, Extension, Footrest, Long, Black - Right	1	1
7			Tube, Extension, Footrest, Long, Black - Left	1	1
8			Screw, Shoulder Hex Socket Head (5/16" x 3", 1/4-20)	1	1
9			Washer (1/4 x 1/2 x 1/16")	1	1
10			Locknut (1/4-20)	1	1
11			NLA - Washer, Wave (17/32 x 3/4 x 1/64")	1	2
12			Screw, Socket Button Head (1/4-20 x 1-1/2")	1	2
13			Washer, Nylon (5/16 x 11/16 x 1/16")	1	2
14			Washer (1/2 x 7/8 x 3/64")	1	2
15			Spacer, Nylon (1/2 x 3/4 x 1/4")	1	8
17			Screw, Socket Button Head w/ Patch (1/4-20 x 3/4")	1	6
18			Washer, Nylon (5/16 x 7/8 x 1/8")	1	2
19			Bracket, Calf Pad, Black	1	1
20			Nut, T (5/16-18)	1	2
21			Adjuster, Calf Pad	1	2
22			Bracket, Mounting, Calf Pad	1	2
23			Locknut (1/4-20)	1	2
24			Screw, Socket, Button Head w/ Patch (5/16-18 x 1/2")	1	2
25			Pad, Calf (4-1/2" W x 7-1/4" L)	1	2
26	G	See Chart	#26 Extension Tube Kits Before 12/15/10	1	1
26		See Chart	#26 Extension Tube Kits After 12/14/10	1	1
27	G	See Chart	#27 Footplate Kits Before 12/15/10	1	1
27		See Chart	#27 Footplate Kits After 12/14/10	1	1
30	C	1163373	Kit, Calf Pad (Pair)	1	1
17			Screw, Socket Button Head w/ Patch (1/4-20 x 3/4")	1	4
25			Pad, Calf (4-1/2" W x 7-1/4" L)	1	2
31	D	1163374	Kit, Footrest Pad - Small (Pair)	1	1
29			Pad, Footplate, Small - Right	1	1
29			Pad, Footplate, Small - Left	1	1
31	D	1163375	Kit, Footrest Pad - Medium (Pair)	1	1
29			Pad, Footplate, Medium - Right	1	1
29			Pad, Footplate, Medium - Left	1	1
31	D	1163376	Kit, Footrest Pad - Large (Pair)	1	1
29			Pad, Footplate, Large - Right	1	1
29			Pad, Footplate, Large - Left	1	1
	E	1165505	Kit, Hardware, Calf Pad Adjustment	1	1
17			Screw, Socket Button Head w/ Patch (1/4-20 x 3/4")	1	2
20			Nut, T (5/16-18)	1	2
21			Adjuster, Calf Pad	1	2
22			Bracket, Mounting, Calf Pad	1	2

Center Mount Front Rigging
(After 12/09/08)
(CTMT-J/CTMT-FJ/CTMT/CTMT-F/CTMT-L/CTMT-FL)

Item Number	Note	Part Number	Description	Quantity Per	
				Package	Assembly
23			Locknut (1/4-20)	1	2
24			Screw, Socket, Button Head w/ Patch (5/16-18 x 1/2")	1	2
	F	1165506	Kit, Bracket, Calf Pad Mounting w/ Hardware	1	1
8			Screw, Shoulder Hex Socket Head (5/16" x 3", 1/4-20)	1	1
9			Washer (1/4 x 1/2 x 1/16")	1	1
10			Locknut (1/4-20)	1	1
18			Washer, Nylon (5/16 x 7/8 x 1/8")	1	2
19			Bracket, Calf Pad, Black	1	1

NOTE:
A - Includes items 2-15. As of 12/15/10 item #1 was revised to accommodate adjustable width footplate hardware. If footplates are needed see item #27.
B - Includes items 2-15 and 17-25. As of 12/15/10 item #16 was revised to accommodate adjustable width footplate hardware. If footplates are needed see item #27.
C - Includes items 17 and 25.
D - Includes a pair of item 29.
E - Not shown. Includes items 17 and 20-24.
F - Not shown. Includes items 8-10, 18 and 19.
G - Chairs built before 12/15/10 will require items 26 and 27 in order to convert to the new CTMT Front Rigging design.

Center Mount Front Rigging
(After 12/09/08)
(CTMT-J/CTMT-FJ/CTMT/CTMT-F/CTMT-L/CTMT-FL)

#26 Extension Tube Kits Before 12/15/10

Front Rigging Side	Short 9-1/2" - 11" Range	Medium 11" - 15" Range	Long 14" - 18" Range
Right	1161984-NLA See Note(s) A	1161986-NLA See Note(s) A	1169821-NLA See Note(s) A
Left	1161985-NLA See Note(s) A	1161987-NLA See Note(s) A	1169822-NLA See Note(s) A
NOTE: A - Includes items 5-7. The Extension Tube Kits are used for non-adjustable width footplate hardware only.			

#26 Extension Tube Kits After 12/14/10

Front Rigging Side	Short 9-1/2" - 11" Range	Medium 11" - 15" Range	Long 14" - 18" Range
Right	1170677 See Note(s) A	1170679 See Note(s) A	1170681 See Note(s) A
Left	1170678 See Note(s) A	1170680 See Note(s) A	1170682 See Note(s) A
NOTE: A - Includes items 5-7. The Extension Tube Kits are used for adjustable width footplate hardware only.			

Center Mount Front Rigging
(After 12/09/08)
(CTMT-J/CTMT-FJ/CTMT/CTMT-F/CTMT-L/CTMT-FL)

#27 Footplate Kits Before 12/15/10

Footplate Side	Small 5-1/4" W x 7-1/2" L	Medium 5-1/2" W x 9-1/2" L	Large 5-7/8" W x 11-1/2" L
Right	1161988 See Note(s) A	1161990 See Note(s) A	1161992 See Note(s) A
Left	1161989 See Note(s) A	1161991 See Note(s) A	1161993 See Note(s) A
NOTE: A - Includes items 10-13 and 16-18. The footplate mounting hardware included is for non-adjustable width only.			

#27 Footplate Kits After 12/14/10

Footplate Side	Small 5-1/4" W x 7-1/2" L	Medium 5-1/2" W x 9-1/2" L	Large 5-7/8" W x 11-1/2" L
Right	1170683 See Note(s) A	1170685 See Note(s) A	1170687 See Note(s) A
Left	1170684 See Note(s) A	1170686 See Note(s) A	1170688 See Note(s) A
NOTE: A - Includes items 10-18 and the Adjustable Width Footplate Instruction Sheet (Not Shown). The footplate mounting hardware included is for adjustable width only.			

Center Mount Rigging Mounting Hardware (CTMT/CTMT-L) and (CTMTJ)

12"-24" Wide Chairs with ASBA Seats (Before 7/5/05)

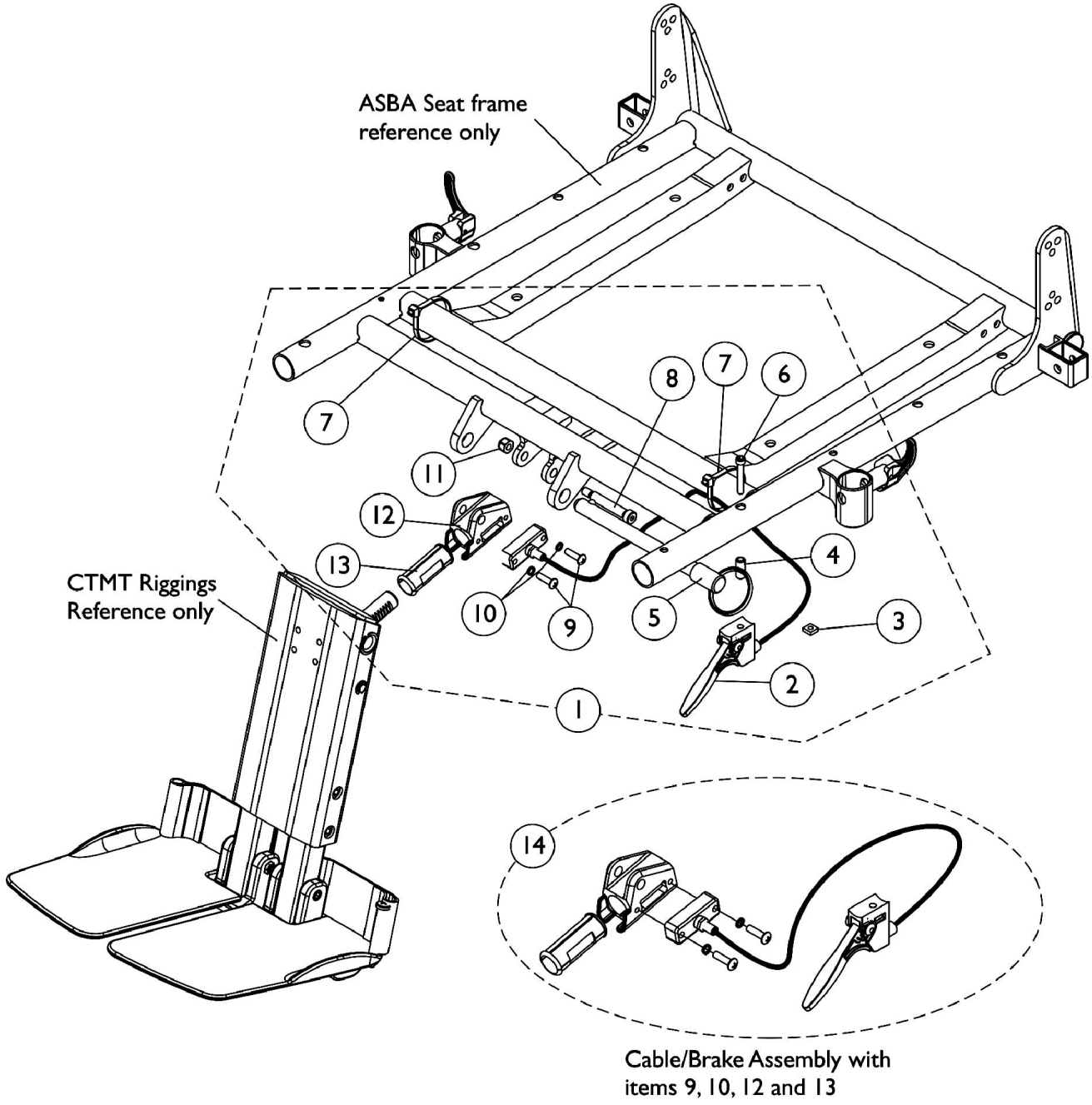

Center Mount Rigging Mounting Hardware (CTMT/CTMT-L) and (CTMTJ)

12"-24" Wide Chairs with ASBA Seats (Before 7/5/05)

Item Number	Note	Part Number	Description	Quantity Per	
				Package	Assembly
1	A	1117264-NLA	NLA - Kit, Center Mount Rigging Mounting Hardware	1	1
2			Cable/Brake Assembly	1	1
3			Nut, Square (#10-32)	1	1
4			NLA - Spacer (3/16 x 5/16 x 3/4")	1	1
5			NLA - Pin, Quick Release (5" Long)	1	1
6			NLA - Screw, Socket Head (#10-32 x 1-1/4")	1	1
7			Tie Wrap (11-1/2" L)	1	2
8			Screw, Shoulder Hex Socket Head (5/16" x 1-5/8", 1/4-20)	1	1
9			Screw, Phillips Pan Head (#10-32 x 11/16")	1	2
10			NLA - Washer, Lock (3/16 x 5/16 x 1/16")	1	2
11			Locknut (1/4-20)	1	1
12			Housing, Ratchet	1	1
13			Bearing, Glide	1	2
14	B	1121079	Cable/Brake Assembly w/ Ratchet Housing and Glide Bearing	1	1

NOTE: A - Includes items 2-13
B - Includes items 2, 9, 10, 12 and 13

Center Mount Rigging Mounting Hardware (CTMT-F/CTMT-FL/CTMT-FJ)

(12"-16" Wide) Chairs with ADJASBA Seats (After 7/4/05)

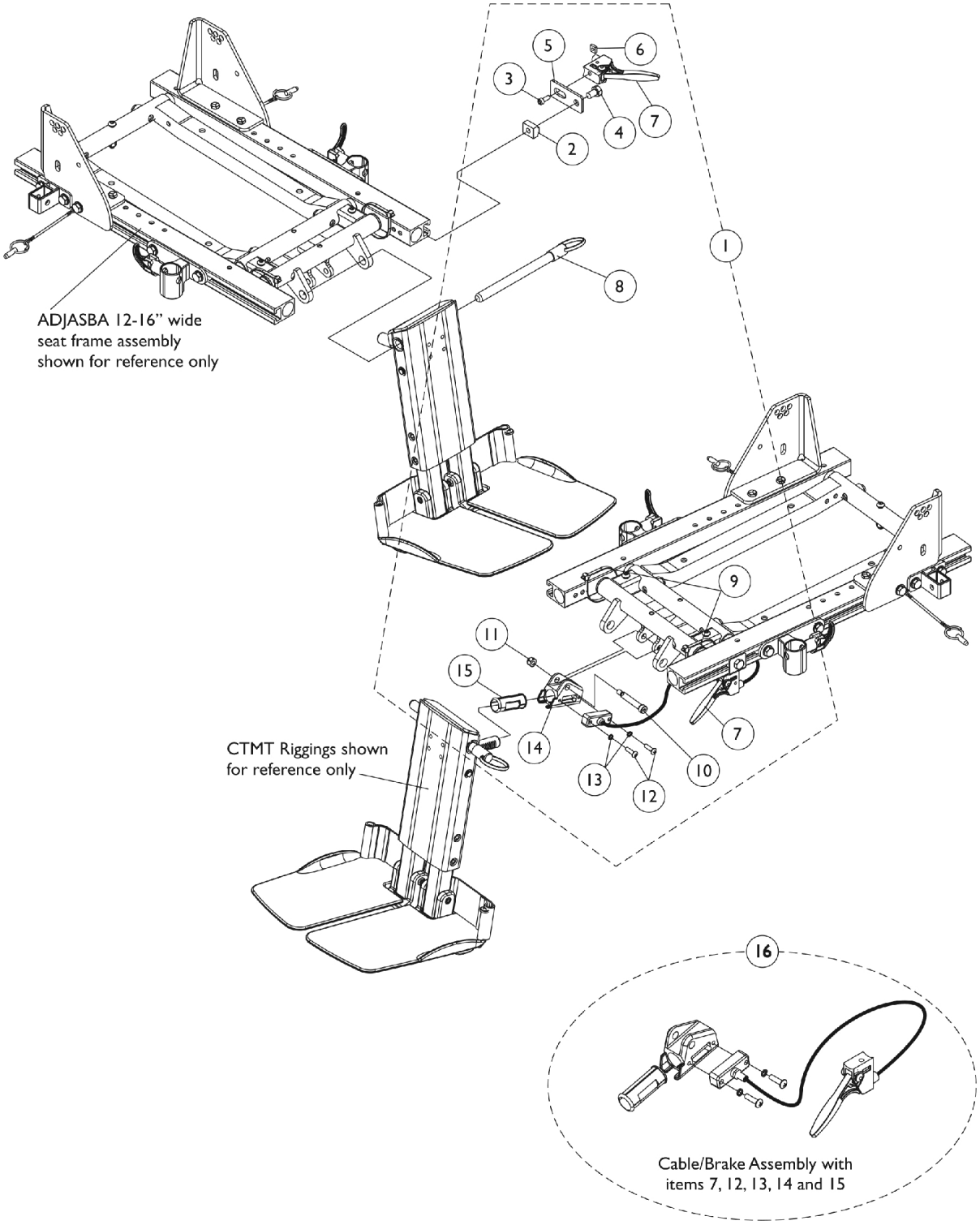

Center Mount Rigging Mounting Hardware (CTMT-F/CTMT-FL/CTMT-FJ)

(12"-16" Wide) Chairs with ADJASBA Seats (After 7/4/05)

Item Number	Note	Part Number	Description	Quantity Per	
				Package	Assembly
1	A,C,C1	1135960	Kit, Center Mount Rigging Mounting Hardware	1	1
2			T-Nut (5/16-18)	1	1
3			NLA - Screw, Socket Head (#10-32 x 1/2")	1	1
4			NLA - Screw, Hex Head w/ Patch (5/16-18 x 1/2")	1	1
5			Bracket, Release Handle Mounting, Black	1	1
6			Nut, Square (#10-32)	1	1
7			Cable/Brake Assembly	1	1
8			NLA - Pin, Quick Release (5" Long)	1	1
9			Tie Wrap (11-1/2" L)	1	2
10			Screw, Shoulder Hex Socket Head (5/16" x 1-5/8", 1/4-20)	1	1
11			Locknut (1/4-20)	1	1
12			Screw, Phillips Pan Head (#10-32 x 11/16")	1	2
13			NLA - Washer, Lock (3/16 x 5/16 x 1/32")	1	2
14			Housing, Ratchet	1	1
15			Bearing, Glide	1	1
16	B	1121079	Cable/Brake Assembly w/ Ratchet Housing and Glide Bearing	1	1

NOTE:
A - Includes items 2-15
B - Includes items 7, 12, 13, 14 and 15
C - Item 5 Release Handle Mounting Bracket was revised 2/7/07 to change the positioning of the release handle to a horizontal position instead of a vertical position.
C1 - The Center Mount Rigging Mounting Hardware Kit is backward compatible to chairs manufacture before 2/7/07 as well.

Center Mount Rigging Mounting Hardware (CTMT-F/CTMT-FL/CTMT-FJ)

(16"-24" Wide) Chairs with ADJASBA Seats (After 7/4/05)

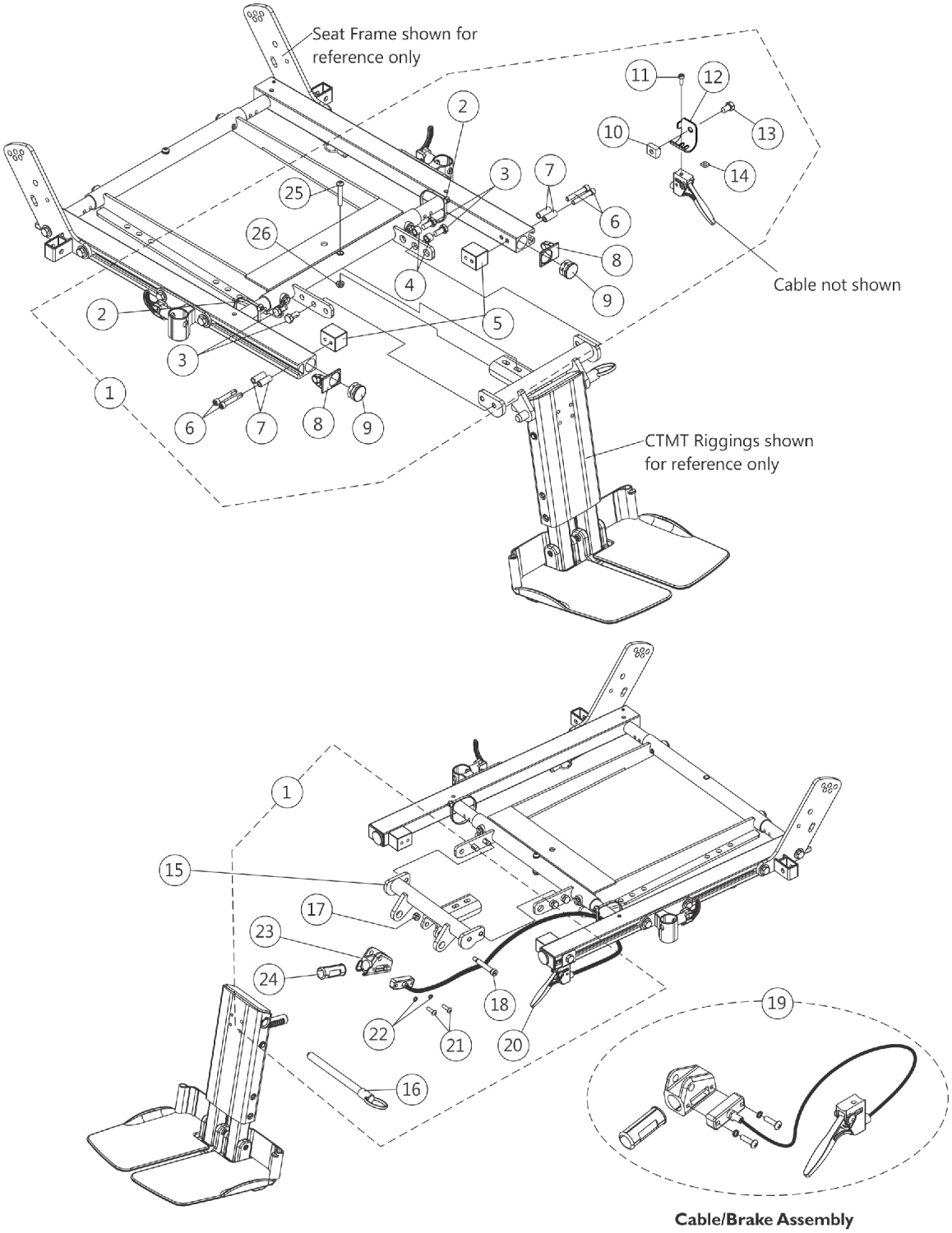

Center Mount Rigging Mounting Hardware (CTMT-F/CTMT-FL/CTMT-FJ)

(16"-24" Wide) Chairs with ADJASBA Seats (After 7/4/05)

Item Number	Note	Part Number	Description	Quantity Per	
				Package	Assembly
1	A	1124701	Kit, CTMT-F/CTMT-FL/CTMT-FJ Center Mount Riggings Mounting Hardware	1	1
2			Tie Wrap (11-1/2" L)	1	2
3			Screw, Hex Head w/ Patch (5/16-18 x 5/8")	1	4
4			Spacer (5/16 x 7/16 x 3/8")	1	2
5			Block, Threaded	1	2
6			Screw, Socket Head Cap w/ Patch (1/4-20 x 1-1/2")	1	4
7			Spacer (1/4 x 3/8 x 29/32")	1	4
8			Cap, End, Side Rail, Black	1	2
9			Plug Button, Black (1")	1	2
10			T-Nut (5/16-18)	1	1
11			NLA - Screw, Socket Head (#10-32 x 1/2")	1	1
12			Bracket, Release Handle Mounting, Black	1	1
13			NLA - Screw, Hex Head w/ Patch (5/16-18 x 1/2")	1	1
14			Nut, Square (#10-32)	1	1
16			NLA - Pin, Quick Release (5" Long)	1	1
17			Locknut (1/4-20)	1	1
18			Screw, Shoulder Hex Socket Head (5/16" x 1-5/8", 1/4-20)	1	1
20			Cable/Brake Assembly	1	1
21			Screw, Phillips Pan Head (#10-32 x 11/16")	1	2
22			NLA - Washer, Lock (3/16 x 5/16 x 1/32")	1	2
23			Housing, Ratchet	1	1
24			Bearing, Glide	1	1
25			Screw, Socket Button Head (1/4-20 x 1-1/2")	1	1
26			Locknut (1/4-20)	1	1
15	C	1122675	Support, Center Mount Rigging, Black (16 - 19" D)	1	1
15	D	1136001	Support, Center Mount Rigging, Long, Black (19 - 22" D)	1	1
19	B	1121079	Cable/Brake Assembly w/ Ratchet Housing and Glide Bearing	1	1
20		1113622	Cable/Brake Assembly	1	1
21		40163X008	Screw, Phillips Pan Head (#10-32 x 11/16")	1	2
22		1028527-NLA	NLA - Washer, Lock (3/16 x 5/16 x 1/32")	1	2
23		1113389	Housing, Ratchet	1	1
24		1113383	Bearing, Glide	1	1

NOTE: A - Includes items 2-14, 16-18 and 20-26
B - Includes items 20-24
C - Support used for 16"-19" deep seats
D - Support used for 19"-22" deep seats

Front Rigging - Center Mount Rigging Kit (CTMTJ)

For ASBA Seats (Before 7/5/05)

For exploded assembly views of non-adjustable width footplate hardware (Before 12/15/10) refer to category titled, "Center Mount Rigging (CTMT-J/CTMT-FJ/CTMT/CTMT-F/CTMT-L/CTMT-FL) - After 12/09/08".

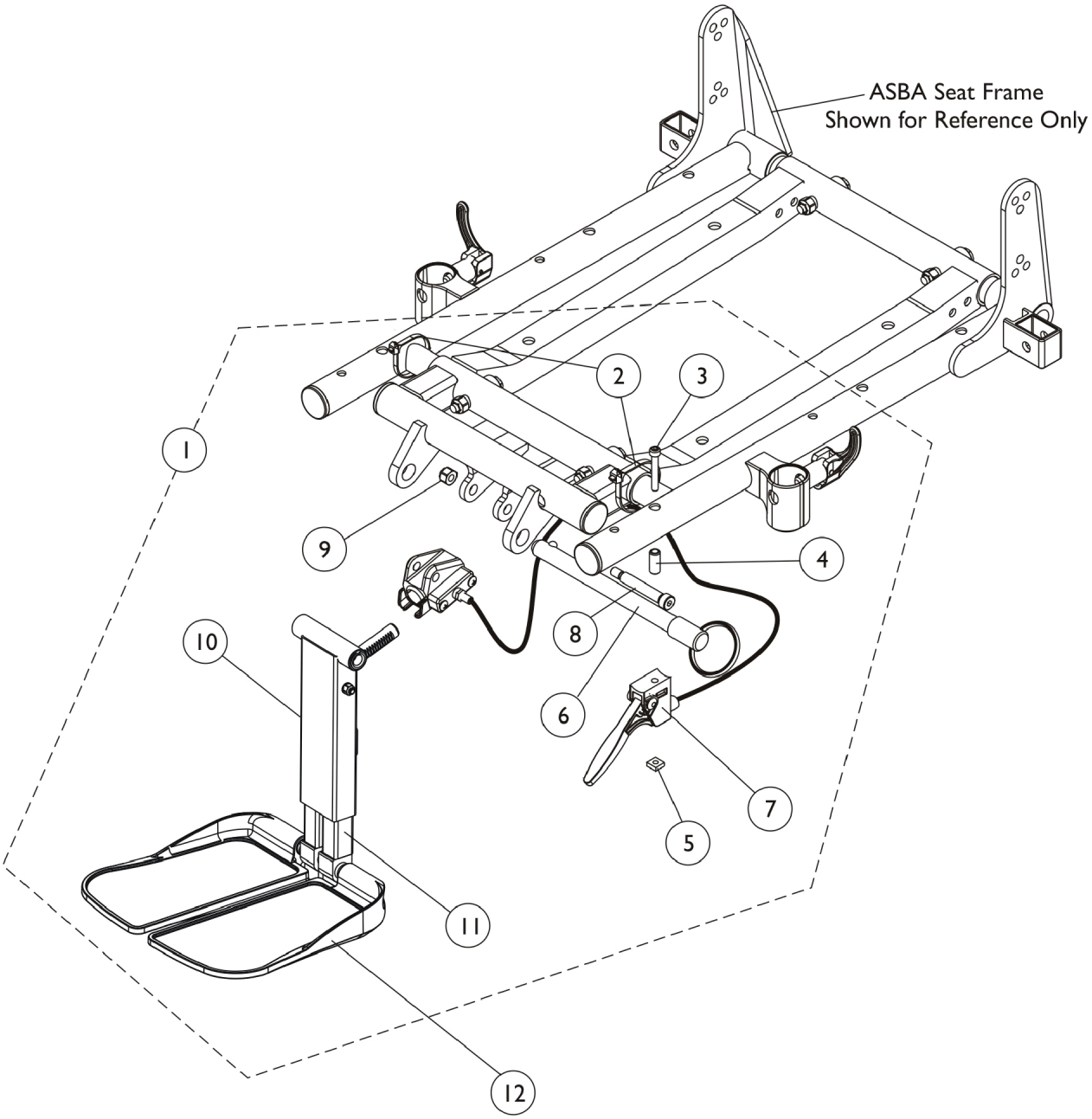

Front Rigging - Center Mount Rigging Kit (CTMTJ)

For ASBA Seats (Before 7/5/05)

For exploded assembly views of non-adjustable width footplate hardware (Before 12/15/10) refer to category titled, "Center Mount Rigging (CTMT-J/CTMT-FJ/CTMT/CTMT-F/CTMT-L/CTMT-FL) - After 12/09/08".

Item Number	Note	Part Number	Description	Quantity Per	
				Package	Assembly
1	A,B	1123022-NLA	NLA - Kit, Adjustable Length Junior Center Mount Rigging (9-1/2"-11" Range)	1	1
2		98007X005	Tie Wrap (11-1/2" L)	1	2
3		1028513-NLA	NLA - Screw, Socket Head (#10-32 x 1-1/4")	1	1
4		1113236-NLA	NLA - Spacer (3/16 x 5/16 x 3/4")	1	1
5		1086207	Nut, Square (#10-32)	1	1
6		1113375-NLA	NLA - Pin, Quick Release (5" Long)	1	1
7		1121079	Cable/Brake Assembly w/ Ratchet Housing and Glide Bearing	1	1
8		1071736	Screw, Shoulder Hex Socket Head (5/16" x 1-5/8", 1/4-20)	1	1
9		1025736	Locknut (1/4-20)	1	1
	C	1118368	Instruction Sheet, Center Mount Rigging Kit	1	1
10		1121990	Kit, Center Mount Front Rigging, Junior (CTMTJ/CTMT-FJ) ASBA/ADJASBA (9-1/2" - 11" Range)	1	1
			Rack, Center Mount Rigging Angle Adjustable	1	1
			Support, Footrest, Center Mount, Black - Short	1	1
			Bearing, Flange (1/2 x 13/16 x 1/2")	1	2
			Cleat, Button Head	1	2
			Screw, Socket, Button Head w/ Patch (5/16-18 x 3/4")	1	6
			Tube, Extension, Footrest, Short, Black - Right	1	1
			Tube, Extension, Footrest, Short, Black - Left	1	1
			Screw, Shoulder Hex Socket Head (5/16" x 2-1/2", 1/4-20)	1	1
			Washer (1/4 x 1/2 x 1/16")	1	1
			Locknut (1/4-20)	1	1
			NLA - Washer, Wave (17/32 x 3/4 x 1/64")	1	2
			Screw, Socket Button Head (1/4-20 x 1-1/2")	1	2
			Washer, Nylon (5/16 x 11/16 x 1/16")	1	2
			Washer (1/2 x 7/8 x 3/64")	1	2
			Spacer, Nylon (1/2 x 3/4 x 1/4")	1	8
11		See Chart	#11 Extension Tube Kits After 12/14/10	1	1
12		See Chart	#12 Footplate Kits After 12/14/10	1	1

NOTE: A - Includes items 2-11 and instruction sheet.
B - As of 12/15/10 item #10 was revised to accommodate adjustable width footplate hardware. If footplates are needed see item #12.
C - Not Shown

Front Rigging - Center Mount Rigging Kit (CTMTJ)

For ASBA Seats (Before 7/5/05)

For exploded assembly views of non-adjustable width footplate hardware (Before 12/15/10) refer to category titled, "Center Mount Rigging (CTMT-J/CTMT-FJ/CTMT/CTMT-F/CTMT-L/CTMT-FL) - After 12/09/08".

#11 Extension Tube Kits After 12/14/10

Front Rigging Side	Short 9-1/2" - 11" Range
Right	1170677 See Note(s) A
Left	1170678 See Note(s) A
NOTE: A - The Extension Tube Kits are used for adjustable width footplate hardware only.	

#12 Footplate Kits After 12/14/10

Footplate Side	Small 5-1/4" W x 7-1/2" L	Medium 5-1/2" W x 9-1/2" L	Large 5-7/8" W x 11-1/2" L
Right	1170683 See Note(s) A	1170685 See Note(s) A	1170687 See Note(s) A
Left	1170684 See Note(s) A	1170686 See Note(s) A	1170688 See Note(s) A
NOTE: A - The footplate mounting hardware included is for adjustable width only.			

Front Rigging - Center Mount Rigging Kit (CTMT/CTMT-L)

For ASBA Seats (Before 7/5/05)

For exploded assembly views of non-adjustable width footplate hardware (Before 12/15/10) refer to category titled, "Center Mount Rigging (CTMT-J/CTMT-FJ/CTMT/CTMT-F/CTMT-L/CTMT-FL) - After 12/09/08".

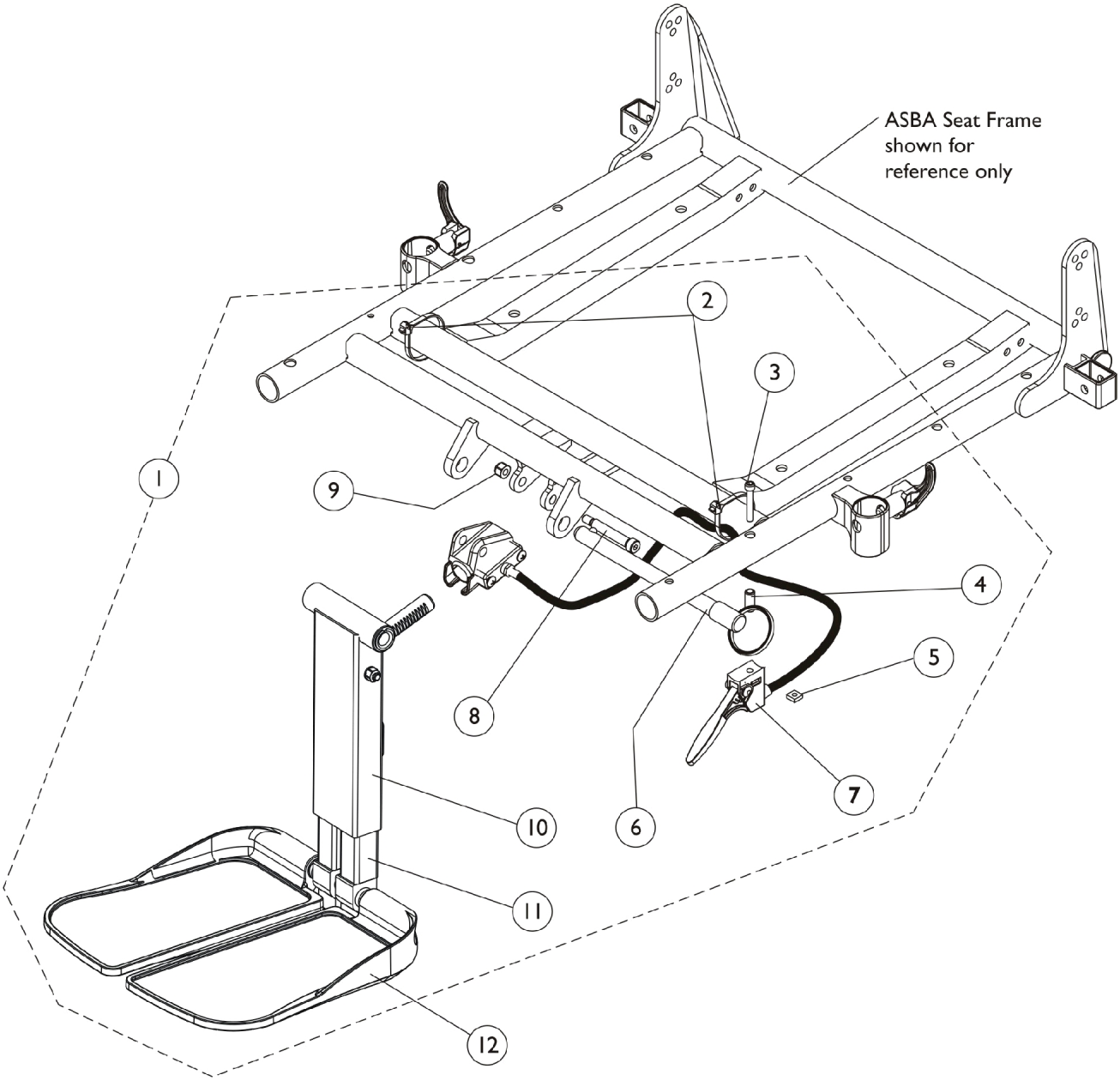

Front Rigging - Center Mount Rigging Kit (CTMT/CTMT-L)

For ASBA Seats (Before 7/5/05)

For exploded assembly views of non-adjustable width footplate hardware (Before 12/15/10) refer to category titled, "Center Mount Rigging (CTMT-J/CTMT-FJ/CTMT/CTMT-F/CTMT-L/CTMT-FL) - After 12/09/08".

Item Number	Note	Part Number	Description	Quantity Per	
				Package	Assembly
1	B,C	1121009-NLA	NLA - Kit, Adjustable Length Center Mount Rigging (11"-15" Range)	1	1
1	A,B,C	1121010-NLA	NLA - Kit, Adjustable Length Center Mount Rigging (14"-18" Range)	1	1
2		98007X005	Tie Wrap (11-1/2" L)	1	2
3		1028513-NLA	NLA - Screw, Socket Head (#10-32 x 1-1/4")	1	1
4		1113236-NLA	NLA - Spacer (3/16 x 5/16 x 3/4")	1	1
5		1086207	Nut, Square (#10-32)	1	1
6		1113375-NLA	NLA - Pin, Quick Release (5" Long)	1	1
7		1121079	Cable/Brake Assembly w/ Ratchet Housing and Glide Bearing	1	1
8		1071736	Screw, Shoulder Hex Socket Head (5/16" x 1-5/8", 1/4-20)	1	1
9		1025736	Locknut (1/4-20)	1	1
	D	1118368	Instruction Sheet, Center Mount Rigging Kit	1	1
10		1117262	Kit, Center Mount Front Rigging (CTMT) (CTMT-F), ASBA/ADJASBA (11" - 15" Range)	1	1
			Rack, Center Mount Rigging Angle Adjustable	1	1
			Support, Footrest, Center Mount, Black - Regular	1	1
			Bearing, Flange (1/2 x 13/16 x 1/2")	1	2
			Cleat, Button Head	1	2
			Screw, Socket, Button Head w/ Patch (5/16-18 x 3/4")	1	6
			Tube, Extension, Footrest, Medium, Black - Right	1	1
			Tube, Extension, Footrest, Medium, Black - Left	1	1
			Screw, Shoulder Hex Socket Head (5/16" x 2-1/2", 1/4-20)	1	1
			Washer (1/4 x 1/2 x 1/16")	1	1
			Locknut (1/4-20)	1	1
			NLA - Washer, Wave (17/32 x 3/4 x 1/64")	1	2
			Screw, Socket Button Head (1/4-20 x 1-1/2")	1	2
			Washer, Nylon (5/16 x 11/16 x 1/16")	1	2
			Washer (1/2 x 7/8 x 3/64")	1	2
			Spacer, Nylon (1/2 x 3/4 x 1/4")	1	8
10		1117263	Kit, Center Mount Front Rigging (CTMT-L) (CTMT-FL), ASBA/ADJASBA (14" - 18" Range)	1	1
			Rack, Center Mount Rigging Angle Adjustable	1	1
			Support, Footrest, Center Mount, Black - Regular	1	1
			Bearing, Flange (1/2 x 13/16 x 1/2")	1	2
			Cleat, Button Head	1	2
			Screw, Socket, Button Head w/ Patch (5/16-18 x 3/4")	1	6

Front Rigging - Center Mount Rigging Kit (CTMT/CTMT-L)

For ASBA Seats (Before 7/5/05)

For exploded assembly views of non-adjustable width footplate hardware (Before 12/15/10) refer to category titled, "Center Mount Rigging (CTMT-J/CTMT-FJ/CTMT/CTMT-F/CTMT-L/CTMT-FL) - After 12/09/08".

Item Number	Note	Part Number	Description	Quantity Per	
				Package	Assembly
			Tube, Extension, Footrest, Long, Black - Right	1	1
			Tube, Extension, Footrest, Long, Black - Left	1	1
			Screw, Shoulder Hex Socket Head (5/16" x 2-1/2", 1/4-20)	1	1
			Washer (1/4 x 1/2 x 1/16")	1	1
			Locknut (1/4-20)	1	1
			NLA - Washer, Wave (17/32 x 3/4 x 1/64")	1	2
			Screw, Socket Button Head (1/4-20 x 1-1/2")	1	2
			Washer, Nylon (5/16 x 11/16 x 1/16")	1	2
			Washer (1/2 x 7/8 x 3/64")	1	2
			Spacer, Nylon (1/2 x 3/4 x 1/4")	1	8
11		See Chart	#11 Extension Tube Kits After 12/14/10	1	1
12		See Chart	#12 Footplate Kits After 12/14/10	1	1

NOTE: A - Not available for low seat-to-floor models.
B - Includes items 2-11 and instruction sheet.
C - As of 12/15/10 item #10 was revised to accommodate adjustable width footplate hardware. If footplates are needed see item #12.
D - Not Shown.

#11 Extension Tube Kits After 12/14/10

Front Rigging Side	Medium 11" - 15" Range	Long 14" - 18" Range
Right	1170679 See Note(s) A	1170681 See Note(s) A
Left	1170680 See Note(s) A	1170682 See Note(s) A

NOTE: A - The Extension Tube Kits are used for adjustable width footplate hardware only.

#12 Footplate Kits After 12/14/10

Footplate Side	Small 5-1/4" W x 7-1/2" L	Medium 5-1/2" W x 9-1/2" L	Large 5-7/8" W x 11-1/2" L
Right	1170683 See Note(s) A	1170685 See Note(s) A	1170687 See Note(s) A
Left	1170684 See Note(s) A	1170686 See Note(s) A	1170688 See Note(s) A

NOTE: A - The footplate mounting hardware included is for adjustable width only.

Center Mount Rigging Kit (CTMT-F/CTMT-FL/CTMT-FJ)

For ADJASBA Seats (After 7/4/05 - 12/09/08)

For exploded assembly views of non-adjustable width footplate hardware (Before 12/15/10) refer to category titled, "Center Mount Rigging (CTMT-J/CTMT-FJ/CTMT/CTMT-F/CTMT-L/CTMT-FL) - After 12/09/08".

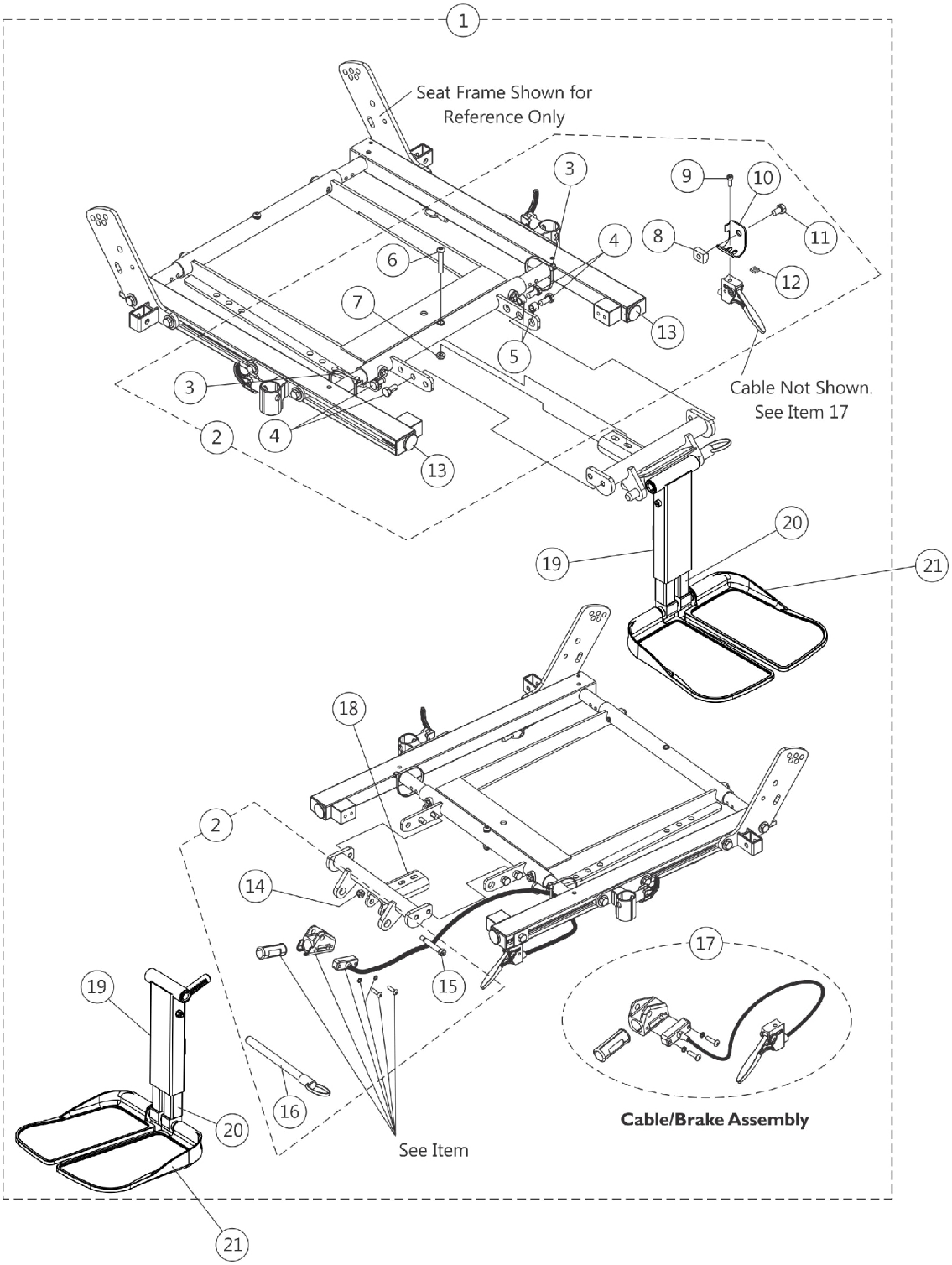

Center Mount Rigging Kit (CTMT-F/CTMT-FL/CTMT-FJ)

For ADJASBA Seats (After 7/4/05 - 12/09/08)

For exploded assembly views of non-adjustable width footplate hardware (Before 12/15/10) refer to category titled, "Center Mount Rigging (CTMT-J/CTMT-FJ/CTMT/CTMT-F/CTMT-L/CTMT-FL) - After 12/09/08".

Item Number	Note	Part Number	Description	Quantity Per	
				Package	Assembly
1	A,C	1129453-NLA	NLA - Kit, Center Mount Rigging (CTMT-F 11"-15" Range & 16"-19" Seat Depths)	1	1
1	A,C	1129454-NLA	NLA - Kit, Center Mount Rigging (CTMT-FL 14"-18" Range & 16"-19" Seat Depths)	1	1
1	A,C	1129455-NLA	NLA - Kit, Center Mount Rigging (CTMT-FJ 9-1/2"-11" Range & 16"-19" Seat Depths)	1	1
1	A,C	1134118-NLA	NLA - Kit, Center Mount Rigging (CTMT-F 11"-15" Range & 19"-22" Seat Depths)	1	1
1	A,C	1134119-NLA	NLA - Kit, Center Mount Rigging (CTMT-FL 14"-18" Range & 19"-22" Seat Depths)	1	1
1	A,C	1134120-NLA	NLA - Kit, Center Mount Rigging (CTMT-FJ 9-1/2"-11" Range & 19"-22" Seat Depths)	1	1
2	B	1129451-NLA	NLA - Kit, CTMT-F/CTMT-FL/CTMT-FJ Center Mount Riggings Mounting Hardware	1	1
3			Tie Wrap (11-1/2" L)	1	2
4			Screw, Hex Head w/ Patch (5/16-18 x 5/8")	1	4
5			Spacer (5/16 x 7/16 x 3/8")	1	2
6			Screw, Socket Button Head (1/4-20 x 1-1/2")	1	1
7			Locknut (1/4-20)	1	1
8			T-Nut (5/16-18)	1	1
9			NLA - Screw, Socket Head (#10-32 x 1/2")	1	1
10			Bracket, Release Handle Mounting, Black	1	1
11			NLA - Screw, Hex Head w/ Patch (5/16-18 x 1/2")	1	1
12			Nut, Square (#10-32)	1	1
13			Plug Button, Black (1")	1	2
14			Locknut (1/4-20)	1	1
15			Screw, Shoulder Hex Socket Head (5/16" x 1-5/8", 1/4-20)	1	1
16			NLA - Pin, Quick Release (5" Long)	1	1
17		1121079	Cable/Brake Assembly w/ Ratchet Housing and Glide Bearing	1	1
18		1122675	Support, Center Mount Rigging, Black (16 - 19" D)	1	1
18		1136001	Support, Center Mount Rigging, Long, Black (19 - 22" D)	1	1
	D	1129450-NLA	NLA - Instruction Sheet, Center Mount Rigging Kit For ADJASBA Seats	1	1
19		1117262	Kit, Center Mount Front Rigging (CTMT) (CTMT-F), ASBA/ADJASBA (11" - 15" Range)	1	1
			Rack, Center Mount Rigging Angle Adjustable	1	1
			Support, Footrest, Center Mount, Black - Regular	1	1
			Bearing, Flange (1/2 x 13/16 x 1/2")	1	2
			Cleat, Button Head	1	2

Center Mount Rigging Kit (CTMT-F/CTMT-FL/CTMT-FJ)

For ADJASBA Seats (After 7/4/05 - 12/09/08)

For exploded assembly views of non-adjustable width footplate hardware (Before 12/15/10) refer to category titled, "Center Mount Rigging (CTMT-J/CTMT-FJ/CTMT/CTMT-F/CTMT-L/CTMT-FL) - After 12/09/08".

Item Number	Note	Part Number	Description	Quantity Per	
				Package	Assembly
			Screw, Socket, Button Head w/ Patch (5/16-18 x 3/4")	1	6
			Tube, Extension, Footrest, Medium, Black - Right	1	1
			Tube, Extension, Footrest, Medium, Black - Left	1	1
			Screw, Shoulder Hex Socket Head (5/16" x 2-1/2", 1/4-20)	1	1
			Washer (1/4 x 1/2 x 1/16")	1	1
			Locknut (1/4-20)	1	1
			NLA - Washer, Wave (17/32 x 3/4 x 1/64")	1	2
			Screw, Socket Button Head (1/4-20 x 1-1/2")	1	2
			Washer, Nylon (5/16 x 11/16 x 1/16")	1	2
			Washer (1/2 x 7/8 x 3/64")	1	2
			Spacer, Nylon (1/2 x 3/4 x 1/4")	1	8
19		1117263	Kit, Center Mount Front Rigging (CTMT-L) (CTMT-FL), ASBA/ADJASBA (14" - 18" Range)	1	1
			Rack, Center Mount Rigging Angle Adjustable	1	1
			Support, Footrest, Center Mount, Black - Regular	1	1
			Bearing, Flange (1/2 x 13/16 x 1/2")	1	2
			Cleat, Button Head	1	2
			Screw, Socket, Button Head w/ Patch (5/16-18 x 3/4")	1	6
			Tube, Extension, Footrest, Long, Black - Right	1	1
			Tube, Extension, Footrest, Long, Black - Left	1	1
			Screw, Shoulder Hex Socket Head (5/16" x 2-1/2", 1/4-20)	1	1
			Washer (1/4 x 1/2 x 1/16")	1	1
			Locknut (1/4-20)	1	1
			NLA - Washer, Wave (17/32 x 3/4 x 1/64")	1	2
			Screw, Socket Button Head (1/4-20 x 1-1/2")	1	2
			Washer, Nylon (5/16 x 11/16 x 1/16")	1	2
			Washer (1/2 x 7/8 x 3/64")	1	2
			Spacer, Nylon (1/2 x 3/4 x 1/4")	1	8
19		1121990	Kit, Center Mount Front Rigging, Junior (CTMTJ/CTMT-FJ) ASBA/ADJASBA (9-1/2" - 11" Range)	1	1
			Rack, Center Mount Rigging Angle Adjustable	1	1
			Support, Footrest, Center Mount, Black - Short	1	1
			Bearing, Flange (1/2 x 13/16 x 1/2")	1	2
			Cleat, Button Head	1	2
			Screw, Socket, Button Head w/ Patch (5/16-18 x 3/4")	1	6
			Tube, Extension, Footrest, Short, Black - Right	1	1

Center Mount Rigging Kit (CTMT-F/CTMT-FL/CTMT-FJ)

For ADJASBA Seats (After 7/4/05 - 12/09/08)

For exploded assembly views of non-adjustable width footplate hardware (Before 12/15/10) refer to category titled, "Center Mount Rigging (CTMT-J/CTMT-FJ/CTMT/CTMT-F/CTMT-L/CTMT-FL) - After 12/09/08".

Item Number	Note	Part Number	Description	Quantity Per	
				Package	Assembly
			Tube, Extension, Footrest, Short, Black - Left	1	1
			Screw, Shoulder Hex Socket Head (5/16" x 2-1/2", 1/4-20)	1	1
			Washer (1/4 x 1/2 x 1/16")	1	1
			Locknut (1/4-20)	1	1
			NLA - Washer, Wave (17/32 x 3/4 x 1/64")	1	2
			Screw, Socket Button Head (1/4-20 x 1-1/2")	1	2
			Washer, Nylon (5/16 x 11/16 x 1/16")	1	2
			Washer (1/2 x 7/8 x 3/64")	1	2
			Spacer, Nylon (1/2 x 3/4 x 1/4")	1	8
20		See Chart	#20 Extension Tube Kits After 12/14/10	1	1
21		See Chart	#21 Footplate Kits After 12/14/10	1	1

NOTE: A - Includes items 1, 2, 17-20 and the Instruction Sheet
B - Includes items 3-16
C - As of 12/15/10 item #19 was revised to accommodate adjustable width footplate hardware. If footplates are needed see item #21.
D - Not Shown

#20 Extension Tube Kits After 12/14/10

Front Rigging Side	Short 9-1/2" - 11" Range	Medium 11" - 15" Range	Long 14" - 18" Range
Right	1170677 See Note(s) A	1170679 See Note(s) A	1170681 See Note(s) A
Left	1170678 See Note(s) A	1170680 See Note(s) A	1170682 See Note(s) A

NOTE: A - The Extension Tube Kits are used for adjustable width footplate hardware only.

#21 Footplate Kits After 12/14/10

Footplate Side	Small 5-1/4" W x 7-1/2" L	Medium 5-1/2" W x 9-1/2" L	Large 5-7/8" W x 11-1/2" L
Right	1170683 See Note(s) A	1170685 See Note(s) A	1170687 See Note(s) A
Left	1170684 See Note(s) A	1170686 See Note(s) A	1170688 See Note(s) A

NOTE: A - The footplate mounting hardware included is for adjustable width only.

Power Articulating Legrest ELRPW/ELRPW22
(Before 7/27/04)

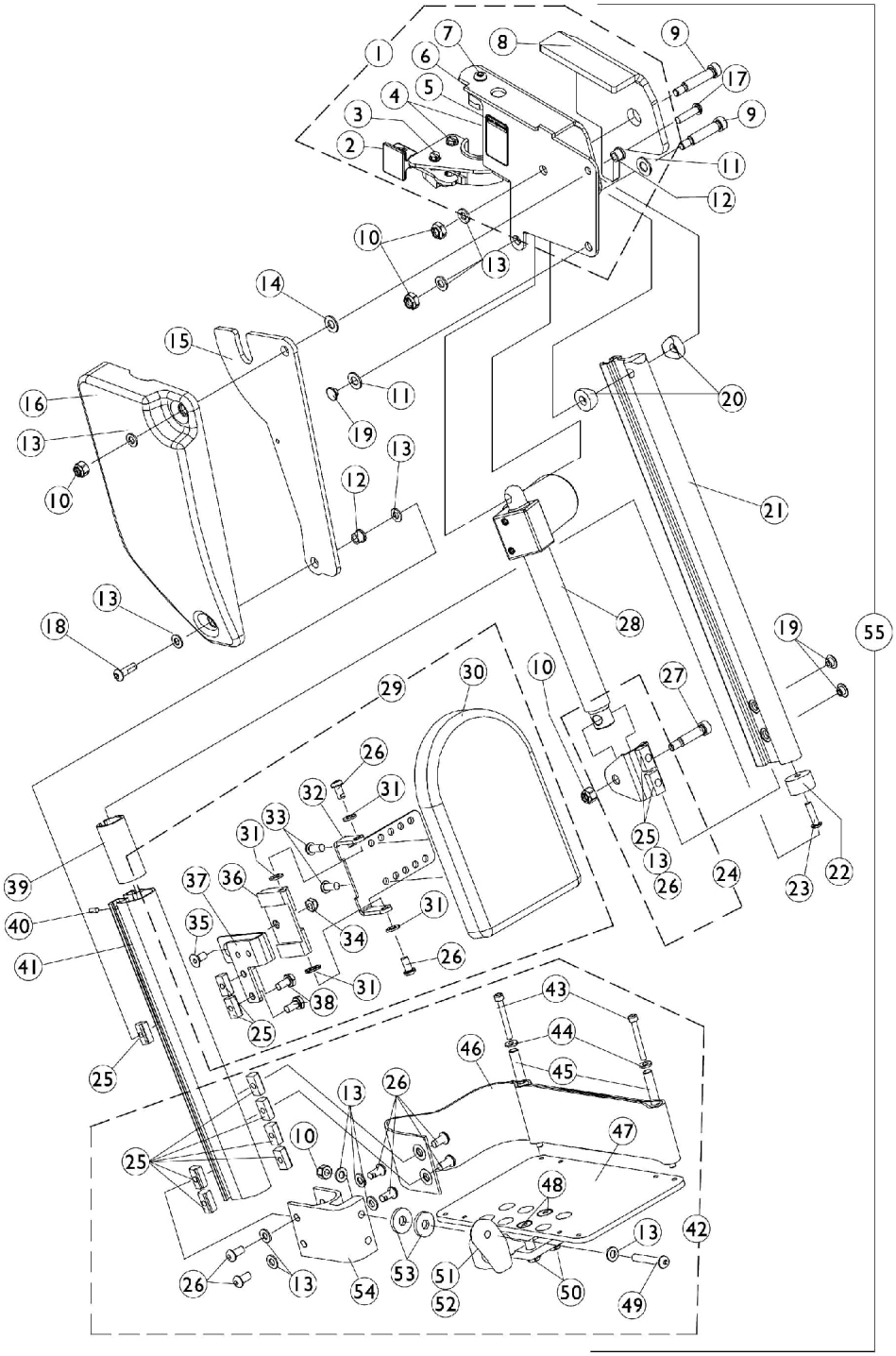

Power Articulating Legrest ELRPW/ELRPW22
(Before 7/27/04)

Item Number	Note	Part Number	Description	Quantity Per Package	Quantity Per Assembly
1	A	1111720-NLA	NLA - Legrest Support Assembly, Sector, Black - Right	1	1
1	A	1111721-NLA	NLA - Legrest Support Assembly, Sector, Black - Left	1	1
2		1025454	Housing, Latch - Right	1	1
2		1025455	Housing, Latch - Left	1	1
3		1017423	Screw, Slotted Hex Washer Head w/ Patch (#10-32 x 1/2")	1	1
4		1025451	Screw, Slotted Hex Washer Head (#10-32 x 5/8")	1	2
5		1079203	Decal, Warning Pinch Point	1	1
6		1099685	Plug, Pivot	1	1
7		1091870	Screw, Socket Button Head w/ Patch (1/4-20 x 3/4")	1	1
8	H	1110968-NLA	NLA - Pad, Cushion - Right	1	1
8	H	1110969-NLA	NLA - Pad, Cushion - Left	1	1
9		1025351-NLA	NLA - Screw, Shoulder Hex Socket Head (5/16" x 1-1/4", 1/4-20)	1	2
10		1025736	Locknut (1/4-20)	1	5
11		1025704	Washer, Flat (5/16 x 5/8 x 1/16")	1	2
12		1099671	Bearing, Flange (1/4 x 5/16" Long)	1	2
13		1026907	Washer (1/4 x 1/2 x 1/16")	1	12
14		1012371-NLA	NLA - Washer, Nylon (3/8 x 7/8 x 1/16")	1	1
15		1110745-NLA	NLA - Plate, Pivot	1	1
16		1110746	Cover, Legrest Support - Right	1	1
16		1110747	Cover, Legrest Support - Left	1	1
17		1009837	Screw, Socket Button Head (1/4-20 x 1")	1	1
18		1091870	Screw, Socket Button Head w/ Patch (1/4-20 x 3/4")	1	1
19		1101883	Glide	1	3
20		0175600	Spacer, Coved (5/16 x 3/4 x 3/8")	1	2
21		1110741	Extrusion, Internal Slide (14-1/4" L)	1	1
22		1099702	Glide, Internal	1	1
23		1018846	Screw, Socket Button Head (#10-24 x 3/4")	1	1
24	B	1110972	Actuator Motor Bracket Assembly	1	1
25		1082699	T-Nut (1/4-20)	1	11
26		1100023	Screw, Button Head w/ Patch (1/4-20 x 1/2")	1	10
27		1087417-NLA	NLA - Screw, Shoulder Hex Socket Head (5/16" x 1", 1/4-20)	1	1
28		1110724	Motor, Actuator - Right	1	1
28		1110725	Motor, Actuator - Left	1	1
29	C	8881110977	Calf Pad Assembly with Hardware - Right	1	1
29	C	8881111715	Calf Pad Assembly with Hardware - Left	1	1
30		88804529X003	Pad, Legrest, Vinyl - Right	1	1
30		88804529X004	Pad, Legrest, Vinyl - Left	1	1
	D,F	1110748-NLA	NLA - Hardware, Calf Pad Bracket	1	1
31		1026033	Washer, Nylon (1/4 x 1/2 x 1/16")	1	4

Power Articulating Legrest ELRPW/ELRPW22
(Before 7/27/04)

Item Number	Note	Part Number	Description	Quantity Per Package	Quantity Per Assembly
32		1099700-NLA	NLA - Bracket, Calf Pad Mounting, Black	1	1
33		1029157	Screw, Phillips Pan Head w/Patch (#10-32 x 7/8")	1	2
34		1025765	Locknut (1/4-28)	1	1
35		1074191-NLA	NLA - Screw, Socket Flat Head (1/4-28 x 1/2")	1	1
36		1099690-NLA	NLA - Block, Calf Pad	1	1
37		1111716	Bracket, Calf Pad Block Mounting, Black - Right	1	1
37		1111717	Bracket, Calf Pad Block Mounting, Black - Left	1	1
38		1078214	Screw, Hex Head w/ Patch (1/4-20 x 1/2")	1	2
39		1110742	Bushing, Sleeve	1	1
40		1079151-NLA	NLA - Pin, Roll (5/64 x 5/8")	1	1
41		1110734-NLA	NLA - Extrusion, External - ELRPW (10-1/2" L)	1	1
41		1121026	Extrusion, External (12-1/2" L) (ELRPW22 Before 7/22/04) and (ELRPW20 After 7/21/04)	1	1
42	E	1101114	Footplate Assembly, Adjustable Angle, Black - Right (5-1/4" W)	1	1
42	E	1101115	Footplate Assembly, Adjustable Angle, Black - Left (5-1/4" W)	1	1
43		1023965-NLA	NLA - Screw, Socket Head (#10-32 x 1-1/2")	1	2
44		1028516	Washer, Steel (3/16 x 7/16 x 1/16")	1	2
45		1015629-NLA	NLA - Bushing	1	2
46		1101268	Heel Loop Assembly - Right	1	1
46		1101269	Heel Loop Assembly - Left	1	1
47		1060427-NLA	NLA - Footplate, Adjustable Angle, Large, Black (5-1/4" W x 8" L)	1	1
48		1029545	Screw, Socket Flat Head (1/4-20 x 3/4")	1	2
49		1008495	Screw, Socket Button Head (1/4-20 x 1-1/2")	1	1
50		1082686	Nut, Barrel, Hex Head (1/4-20 x 11/16")	1	2
51		1052102	Hinge, Footplate - Right	1	1
51		1052103	Hinge, Footplate - Left	1	1
52		1048816	Screw, Nylon Adjustment (1/2-13 x 7/8")	1	1
53		1016301	Washer, Nylon (5/16 x 7/8 x 1/8")	1	2
54		1099678	Extrusion, Footplate Adapter	1	1
55	G	1110743-NLA	NLA - Legrest Assembly, Power Articulating, Sector, Black (13"-20" Range) - Right	1	1
55	G	1110744-NLA	NLA - Legrest Assembly, Power Articulating, Sector, Black (13"-20" Range) - Left	1	1
55	G	1121027-NLA	NLA - Legrest Assembly, Power Articulating, Sector, Black (15"-22" Range) - Right	1	1
55	G	1121028-NLA	NLA - Legrest Assembly, Power Articulating, Sector, Black (15"-22" Range) - Left	1	1

Power Articulating Legrest ELRPW/ELRPW22
(Before 7/27/04)

NOTE:	A - Includes items 2-8
	B - Includes items 13, 25 and 26
	C - Includes Items 25, 26 and 30-38
	D - Includes Items 25, 26, 31-36, 38
	E - Includes Items 10, 13, 25, 26 and 43-54
	F - Not Shown
	G - Due to a product enhancement that provides a higher pivot point at the knee, a customer must order a complete right and left side legrest assembly. See page titled "Power Articulating Legrest After 7/26/04".
	H - No longer available individually. See Item number 1 for replacement.

Power Articulating Legrest ELRPW/ELRPW22
(After 7/26/04)

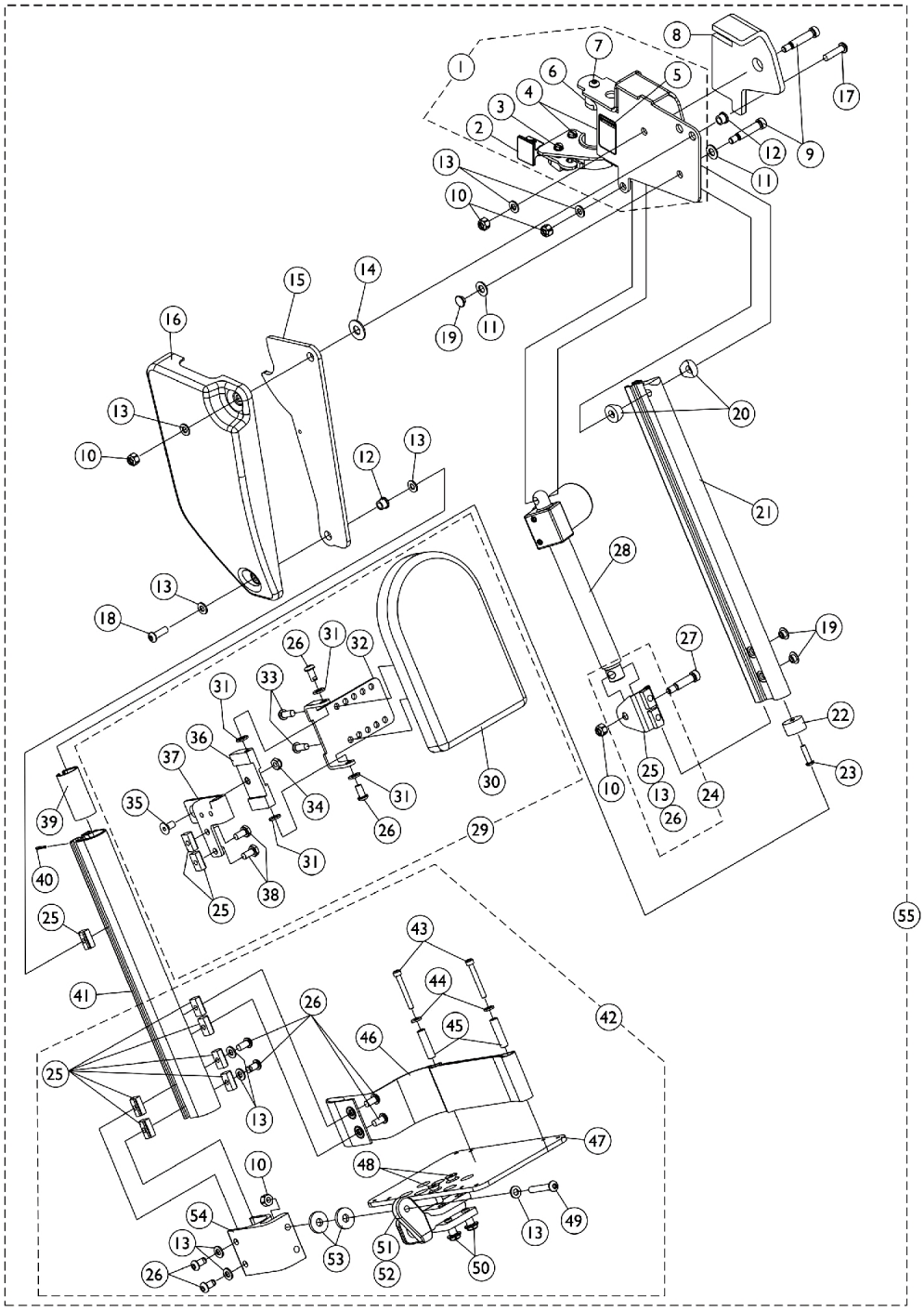

Power Articulating Legrest ELRPW/ELRPW22
(After 7/26/04)

Item Number	Note	Part Number	Description	Quantity Per Package	Quantity Per Assembly
1	A	1125436	Legrest Support Assembly, Sector, Black - Right	1	1
1	A	1125437	Legrest Support Assembly, Sector, Black - Left	1	1
2		1025454	Housing, Latch - Right	1	1
2		1025455	Housing, Latch - Left	1	1
3		1017423	Screw, Slotted Hex Washer Head w/ Patch (#10-32 x 1/2")	1	1
4		1025451	Screw, Slotted Hex Washer Head (#10-32 x 5/8")	1	2
5		1079203	Decal, Warning Pinch Point	1	1
6		1099685	Plug, Pivot	1	1
7		1091870	Screw, Socket Button Head w/ Patch (1/4-20 x 3/4")	1	1
8		1125433	Pad, Cushion - Right	1	1
8		1125434	Pad, Cushion - Left	1	1
9		1025351-NLA	NLA - Screw, Shoulder Hex Socket Head (5/16" x 1-1/4", 1/4-20)	1	2
10		1025736	Locknut (1/4-20)	1	5
11		1025704	Washer, Flat (5/16 x 5/8 x 1/16")	1	1
12		1099671	Bearing, Flange (1/4 x 5/16" Long)	1	2
13		1026907	Washer (1/4 x 1/2 x 1/16")	1	12
14		1012371-NLA	NLA - Washer, Nylon (3/8 x 7/8 x 1/16")	1	1
15		1125424	Plate, Pivot	1	1
16		1110746	Cover, Legrest Support - Right	1	1
16		1110747	Cover, Legrest Support - Left	1	1
17		1009837	Screw, Socket Button Head (1/4-20 x 1")	1	1
18		1091870	Screw, Socket Button Head w/ Patch (1/4-20 x 3/4")	1	1
19		1101883	Glide	1	2
20		0175600	Spacer, Coved (5/16 x 3/4 x 3/8")	1	2
21		1110741	Extrusion, Internal Slide (14-1/4" L)	1	1
22		1099702	Glide, Internal	1	1
23		1018846	Screw, Socket Button Head (#10-24 x 3/4")	1	1
24	B	1110972	Actuator Motor Bracket Assembly	1	1
25		1082699	T-Nut (1/4-20)	1	11
26		1100023	Screw, Button Head w/ Patch (1/4-20 x 1/2")	1	10
27		1087417-NLA	NLA - Screw, Shoulder Hex Socket Head (5/16" x 1", 1/4-20)	1	1
28		1110724	Motor, Actuator - Right	1	1
28		1110725	Motor, Actuator - Left	1	1
29	C	8881110977	Calf Pad Assembly with Hardware - Right	1	1
29	C	8881111715	Calf Pad Assembly with Hardware - Left	1	1
30		88804529X003	Pad, Legrest, Vinyl - Right	1	1
30		88804529X004	Pad, Legrest, Vinyl - Left	1	1
	D,F	1110748-NLA	NLA - Hardware, Calf Pad Bracket	1	1
31		1026033	Washer, Nylon (1/4 x 1/2 x 1/16")	1	4
32		1099700-NLA	NLA - Bracket, Calf Pad Mounting, Black	1	1
33		1029157	Screw, Phillips Pan Head w/Patch (#10-32 x 7/8")	1	2

Power Articulating Legrest ELRPW/ELRPW22
(After 7/26/04)

Item Number	Note	Part Number	Description	Quantity Per Package	Quantity Per Assembly
34		1025765	Locknut (1/4-28)	1	1
35		1074191-NLA	NLA - Screw, Socket Flat Head (1/4-28 x 1/2")	1	1
36		1099690-NLA	NLA - Block, Calf Pad	1	1
37		1111716	Bracket, Calf Pad Block Mounting, Black - Right	1	1
37		1111717	Bracket, Calf Pad Block Mounting, Black - Left	1	1
38		1078214	Screw, Hex Head w/ Patch (1/4-20 x 1/2")	1	2
39		1110742	Bushing, Sleeve	1	1
40		1079151-NLA	NLA - Pin, Roll (5/64 x 5/8")	1	1
41		1121026	Extrusion, External (12-1/2" L) (ELRPW22 Before 7/22/04) and (ELRPW20 After 7/21/04)	1	1
41		1125435	Extrusion, External - ELRPW22 (14-1/2" L)	1	1
42	E	1101114	Footplate Assembly, Adjustable Angle, Black - Right (5-1/4" W)	1	1
42	E	1101115	Footplate Assembly, Adjustable Angle, Black - Left (5-1/4" W)	1	1
43		1023965-NLA	NLA - Screw, Socket Head (#10-32 x 1-1/2")	1	2
44		1028516	Washer, Steel (3/16 x 7/16 x 1/16")	1	2
45		1015629-NLA	NLA - Bushing	1	2
46		1101268	Heel Loop Assembly - Right	1	1
46		1101269	Heel Loop Assembly - Left	1	1
47		1060427-NLA	NLA - Footplate, Adjustable Angle, Large, Black (5-1/4" W x 8" L)	1	1
48		1029545	Screw, Socket Flat Head (1/4-20 x 3/4")	1	2
49		1008495	Screw, Socket Button Head (1/4-20 x 1-1/2")	1	1
50		1082686	Nut, Barrel, Hex Head (1/4-20 x 11/16")	1	2
51		1052102	Hinge, Footplate - Right	1	1
51		1052103	Hinge, Footplate - Left	1	1
52		1048816	Screw, Nylon Adjustment (1/2-13 x 7/8")	1	1
53		1016301	Washer, Nylon (5/16 x 7/8 x 1/8")	1	2
54		1099678	Extrusion, Footplate Adapter	1	1
55	G	1126091	Legrest Assembly, Power Articulating, Sector, Black (13 - 20" Range) - Right	1	1
55	G	1126092	Legrest Assembly, Power Articulating, Sector, Black (13 - 20" Range) - Left	1	1
55	G	1126093	Legrest Assembly, Power Articulating, Sector, Black (15 - 22" Range) - Right	1	1
55	G	1126094	Legrest Assembly, Power Articulating, Sector, Black (15 - 22" Range) - Left	1	1

NOTE:
A - Includes items 2-7
B - Includes items 13, 25 and 26
C - Includes Items 25, 26 and 30-38
D - Includes Items 25, 26, 31-36, 38
E - Includes Items 10, 13, 25, 26 and 43-54
F - Not Shown
G - Includes items 1, 8-23, 24, 27, 28, 29, 39-41 and 42

Power Articulating Legrest ELRPW/ELRPW22
Harnesses and Hardware For ASBA (Before 7/5/05)

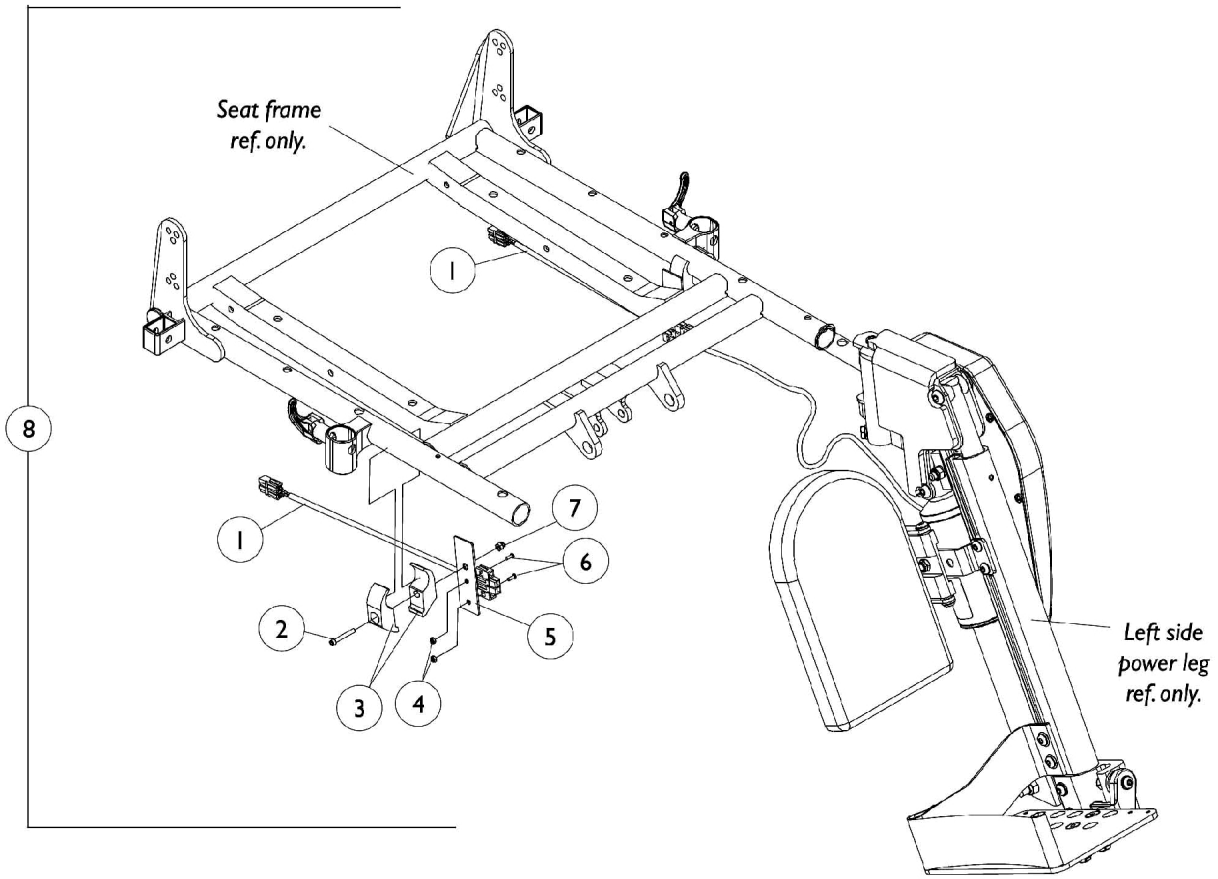

Power Articulating Legrest ELRPW/ELRPW22

Harnesses and Hardware For ASBA (Before 7/5/05)

Item Number	Note	Part Number	Description	Quantity Per	
				Package	Assembly
1		1101400	Harness, ELRPW Power Legrest - Right	1	1
1		1101401	Harness, ELRPW Power Legrest - Left	1	1
2		1003424	Screw, Socket Head (1/4-20 x 1-3/4")	1	2
3		1018692-NLA	NLA - Clamp, Half, Non-Threaded	1	4
4		1056098	Locknut (#8-32)	1	4
5		1102022-NLA	NLA - Bracket, Harness Wire, Black	1	2
6		1091871-NLA	NLA - Screw, Socket Head (#8-32 x 5/8")	1	4
7		1044214	Nut, Hex with Nylon Cap (1/4-20)	1	2
8	A	1101520-NLA	NLA - Kit, Power Leg Harness and Mounting Hardware	2	1
	B	1104253-NLA	NLA - Tie Wrap (8" L)	10	1

NOTE: A - Includes items 1-7
B - Not Shown

Power Articulating Legrest ELRPW/ELRPW22
Harnesses and Hardware For ADJASBA Seat (After 7/4/05)

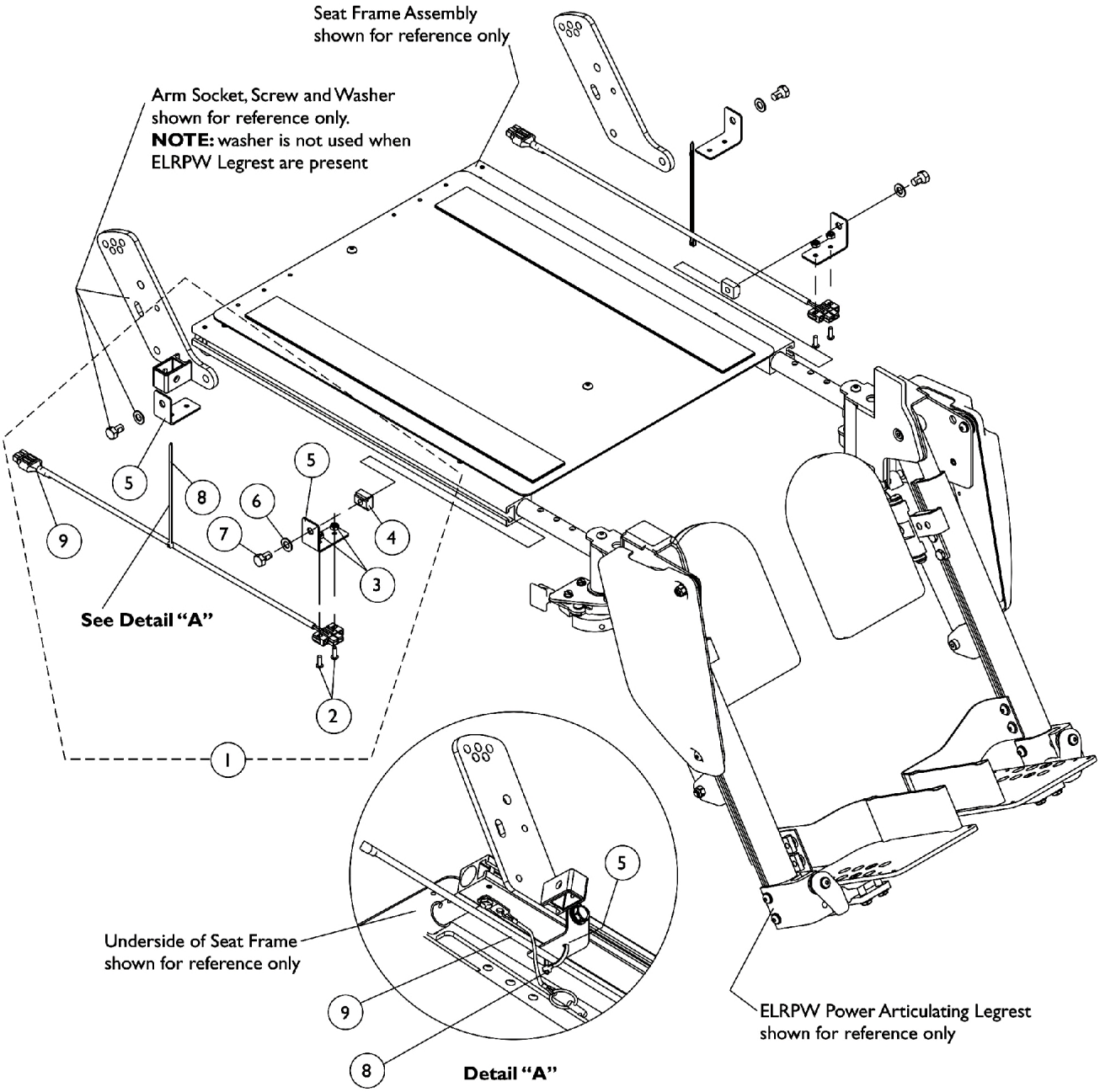

Power Articulating Legrest ELRPW/ELRPW22

Harnesses and Hardware For ADJASBA Seat (After 7/4/05)

Item Number	Note	Part Number	Description	Quantity Per	
				Package	Assembly
1	A,B	1125679-NLA	NLA - Kit, ELRPW Power Articulating Legrest Harnesses and Mounting Hardware (Pair)	2	1
2			NLA - Screw, Socket Head (#8-32 x 5/8")	1	4
3			Locknut (#8-32)	1	4
4			T-Nut (5/16-18)	1	2
5			NLA - Bracket, Wire Harness, Black	1	4
6			Washer, Flat (5/16 x 5/8 x 1/16")	1	2
7			NLA - Screw, Hex Head w/ Patch (5/16-18 x 1/2")	1	2
8			Tie Wrap (5-5/8" L)	1	2
9			NLA - Harness, ELRPW Power Legrest - Right	1	1
9			NLA - Harness, ELRPW Power Legrest - Left	1	1

NOTE: A - Includes items 2-9
B - On 2/28/07 the Dual Leg Actuator Module (DLIAM) harness cable that plugs into item #9 ELRPW Power Legrest Harness Assembly was lengthened from approximately 3" to 20" long to eliminate the need for the ELRPW Power Legrest Harness Assemblies

MK6i Electronics

If you are looking for **MK6i™ Electronics** introduced to the TDX3, TDX3 SE, TDX4, TDX5 Powered Wheelchair on or about 10/9/06

The parts catalog information is now divided into two separate catalogs.

Web Page

The MK6i™ Electronics information can be found on the Invacare web page by selecting "Electronics MK6i™" in the "Select Parts Catalog" drop down menu.

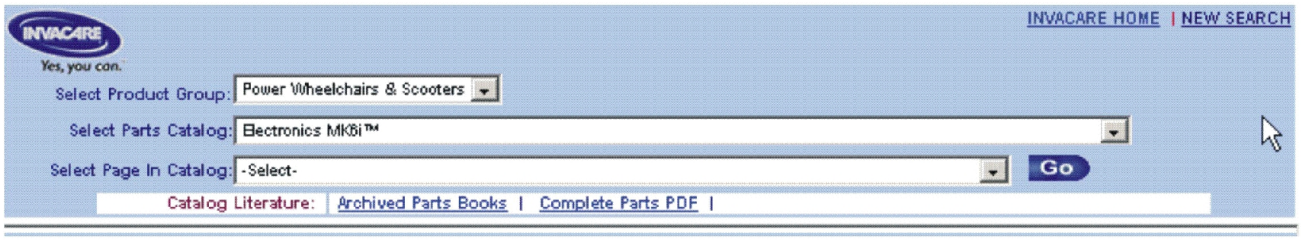

Printed Catalog

The MK6i™ Electronics information can be found in printed copy at our Literature Fulfillment Center listed under form # 06-110 and titled "MK6i™ Electronics".

Dual Legs Integrated Actuator Module (DLIAM) MK6i
For ELRPW Front Riggings

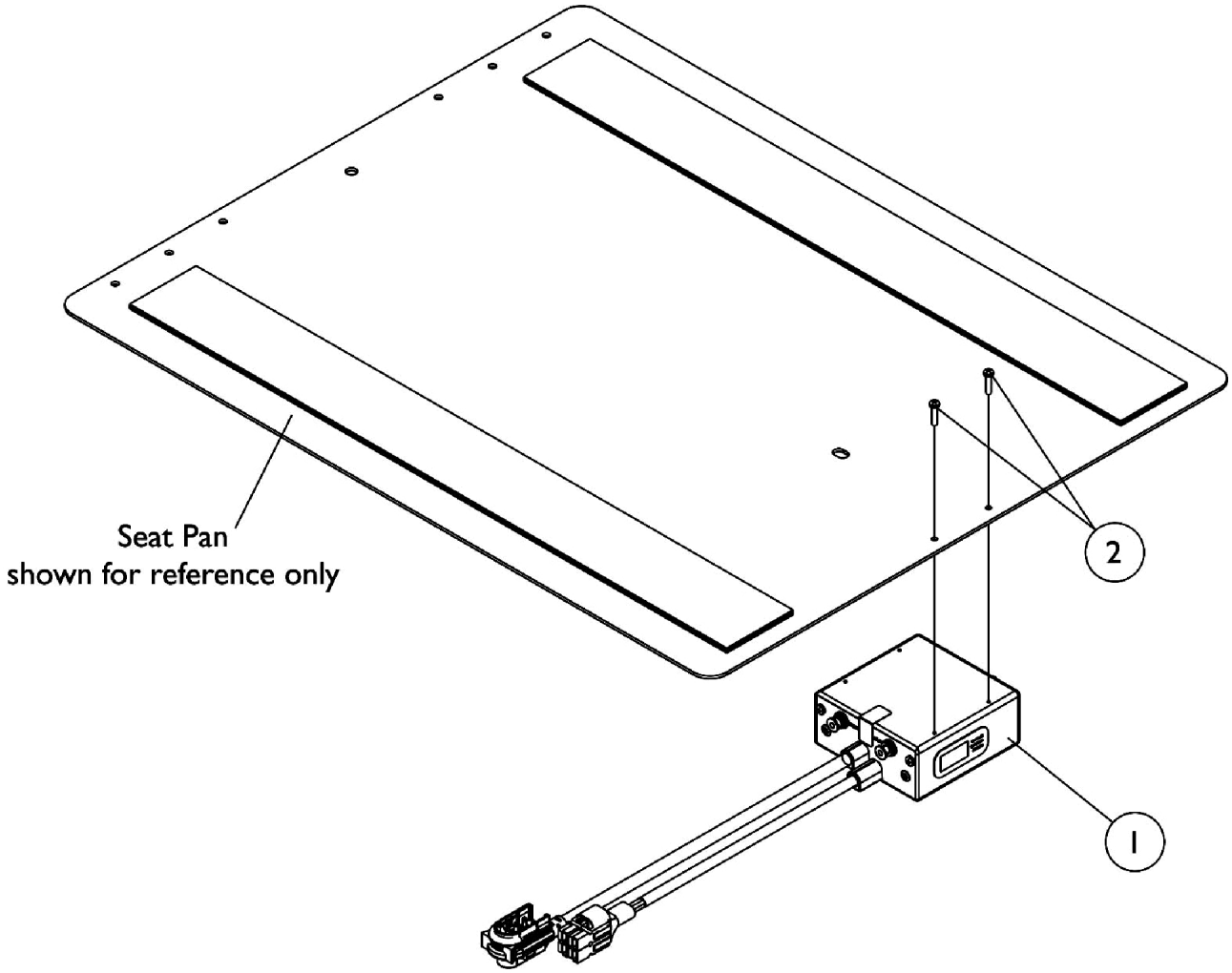

Dual Legs Integrated Actuator Module (DLIAM) MK6i

For ELRPW Front Riggings

Item Number	Note	Part Number	Description	Quantity Per	
				Package	Assembly
1	A,B	1140032	Module, Dual Legs Integrated Actuator (DLIAM) - MK6i (54" L)	1	1
2		1021742	Screw, Phillips Pan Head (#4-40 x 1/2")	1	2

NOTE: A - The Dual Legs Integrated Actuator Module is attached to a 12"-16" wide seat pan in the same way when ELRPW Front Riggings are ordered with MK6i electronics

B - On 2/28/07 the Dual Leg Actuator Module (DLIAM) harness cable lengthened from approximately 3" to 20" long to eliminate the need for the ELRPW Power Legrest Harness Assembly part numbers 1125656 RT and 1125657 LT

MK5 SPJ-80 Joystick and Mounting Hardware
Introduced 10/20/03 Standard on TDX3

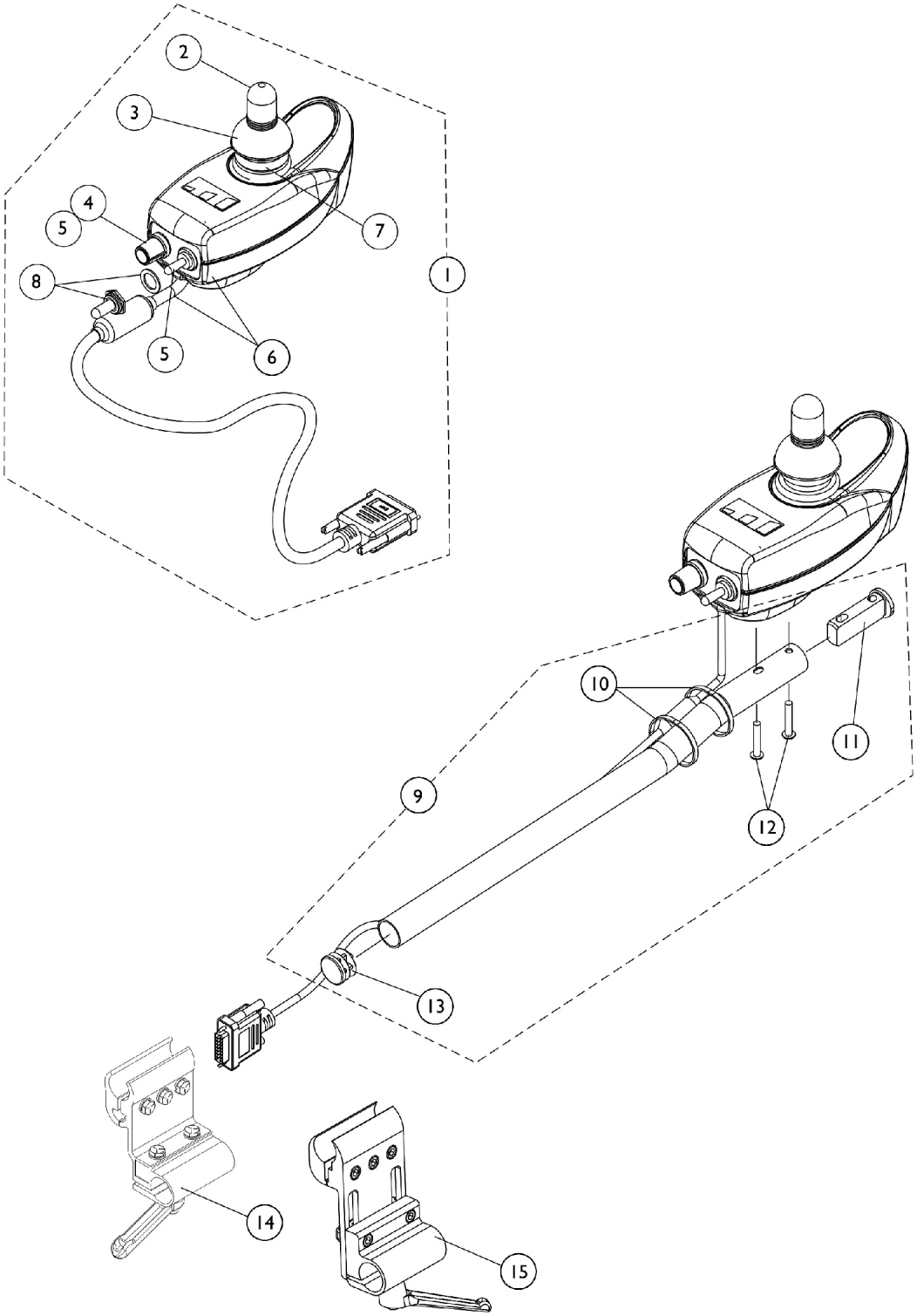

MK5 SPJ-80 Joystick and Mounting Hardware

Introduced 10/20/03 Standard on TDX3

Item Number	Note	Part Number	Description	Quantity Per Package	Quantity Per Assembly
1	A	1122190-NLA	NLA - Joystick, MK5 SPJ-80	1	1
1	A,F	1122190E-NLA	NLA - WARR RPLMT - Joystick, MK5 SPJ-80	1	1
2		1040217	Knob, Joystick Rubber, Black	1	1
3		1040218	Skirt, Joystick Rubber, Black	1	1
4		1025516-NLA	NLA - Knob, Speed Control	1	1
5		1122204-NLA	NLA - Switch Assembly, Power/ Speed Potentiometer, NOTE: Power and Speed Potentiometer Switches are assembled to one connector and sold as one assembly.	1	1
6		1119443-NLA	NLA - Bottom Housing w/ Cable Assembly, MK5 DPJ/ SPJ-80	1	1
7		1115235-NLA	NLA - Inductive, MK5 MPJ/ DPJ/ SPJ-80 Joystick	1	1
8		1058464-NLA	NLA - Boot, Switch	1	1
9	B	1093069	Kit, 1/2" Offset Joystick Tube with Hardware	1	1
10		1095502-NLA	NLA - Package, Tie Wrap (11-1/2" L)	10	2
11		1093063	Spacer, Joystick Tube, Black	1	1
12		1025714	Screw, Phillips Pan Head (#10-32 x 1-1/8")	1	2
13		1027095	Plug Button, Black (7/8")	1	1
14	E	1093071	Clamp, Fixed Height Joystick Tube	1	1
15	D,E	1139422	Clamp, Height Adjustable Joystick Tube (ARM250)	1	1
	C	1006270	Extension, Joystick, "T" Style (1560) (4" W x 5-1/2" L)	1	1
	C	1006271	Extension, Joystick, Straight Style (1561) (1/2" W x 5" L)	1	1

NOTE:
A - Includes items 2-8
B - Includes items 10-13
C - Not Shown
D - Introduced 10/31/05 as option (ARM250) and can be used to replace a Fixed Height Joystick Clamp in the field
E - Individual components are non-saleable
F - Upgrade to MK6 is available. See category titled, "MK5 SPJ-80 Upgrade to MK6" within Electronics MK6i parts book.

MK5 DPJ Joystick and Mounting Hardware

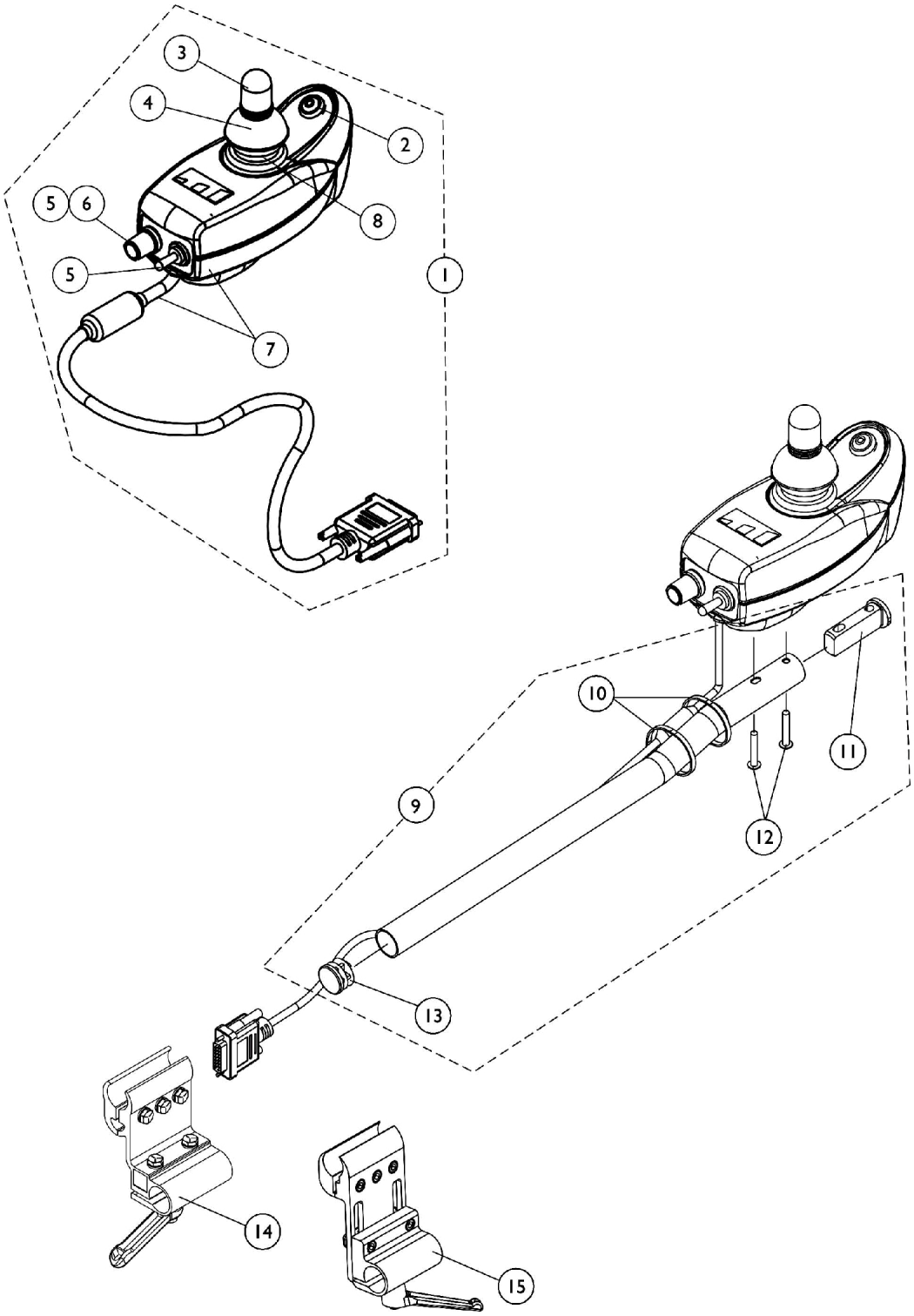

MK5 DPJ Joystick and Mounting Hardware

Item Number	Note	Part Number	Description	Quantity Per Package	Quantity Per Assembly
1	A,F	1112980E-NLA	NLA - WARR RPLMT - Joystick, MK5 DPJ	1	1
	C,G	1165489-NLA	NLA - Kit, MK5 DPJ to MPJ Conversion	1	1
			NLA - Joystick, MK5 MPJ	1	1
			NLA - Joystick Offset Tube w/ Hardware, Black (1/2")	1	1
2	E	1119441-NLA	NLA - Switch Assembly, Mode	1	1
3		1040217	Knob, Joystick Rubber, Black	1	1
4		1040218	Skirt, Joystick Rubber, Black	1	1
5		1119440-NLA	NLA - Switch Assembly, Power/ Drive Select/Speed Potentiometer NOTE:Power/Drive Select and Speed Potentiometer switches are assembled to one connector and sold as one assembly	1	1
6		1025516-NLA	NLA - Knob, Speed Control	1	1
7		1119443-NLA	NLA - Bottom Housing w/ Cable Assembly, MK5 DPJ/ SPJ-80	1	1
8		1115235-NLA	NLA - Inductive, MK5 MPJ/ DPJ/ SPJ-80 Joystick	1	1
9	B	1093069	Kit, 1/2" Offset Joystick Tube with Hardware	1	1
10		1095502-NLA	NLA - Package, Tie Wrap (11-1/2" L)	10	2
11		1093063	Spacer, Joystick Tube, Black	1	1
12		1025714	Screw, Phillips Pan Head (#10-32 x 1-1/8")	1	2
13		1027095	Plug Button, Black (7/8")	1	1
14		1093071	Clamp, Fixed Height Joystick Tube	1	1
15	D	1139422	Clamp, Height Adjustable Joystick Tube (ARM250)	1	1
	C	1006270	Extension, Joystick, "T" Style (1560) (4" W x 5-1/2" L)	1	1
	C	1006271	Extension, Joystick, Straight Style (1561) (1/2" W x 5" L)	1	1

NOTE:
A - Includes items 2-8. Hardware not included.
B - Includes items 10-13.
C - Not Shown.
D - Introduced 10/31/05 as option (ARM250) and can be used to replace a Fixed Height Joystick Clamp in the field
E - Mode switch is no longer available for aftermarket sales. Please contact Invacare Customer Service to obtain a return authorization number for repair/estimate for repair.
F - No longer available. Replaced with 1165489.
G - Kit is No Longer Available. You must now order the MK5 MPJ Joystick separately from the Mounting Hardware. Choose either the Joystick Tube w/ Hardware or the Quad Link w/ Hardware. See Category titled, "Electronics - MK5 MPJ Joystick & Mounting Hardware".

MK5 MPJ Joystick and Mounting Hardware

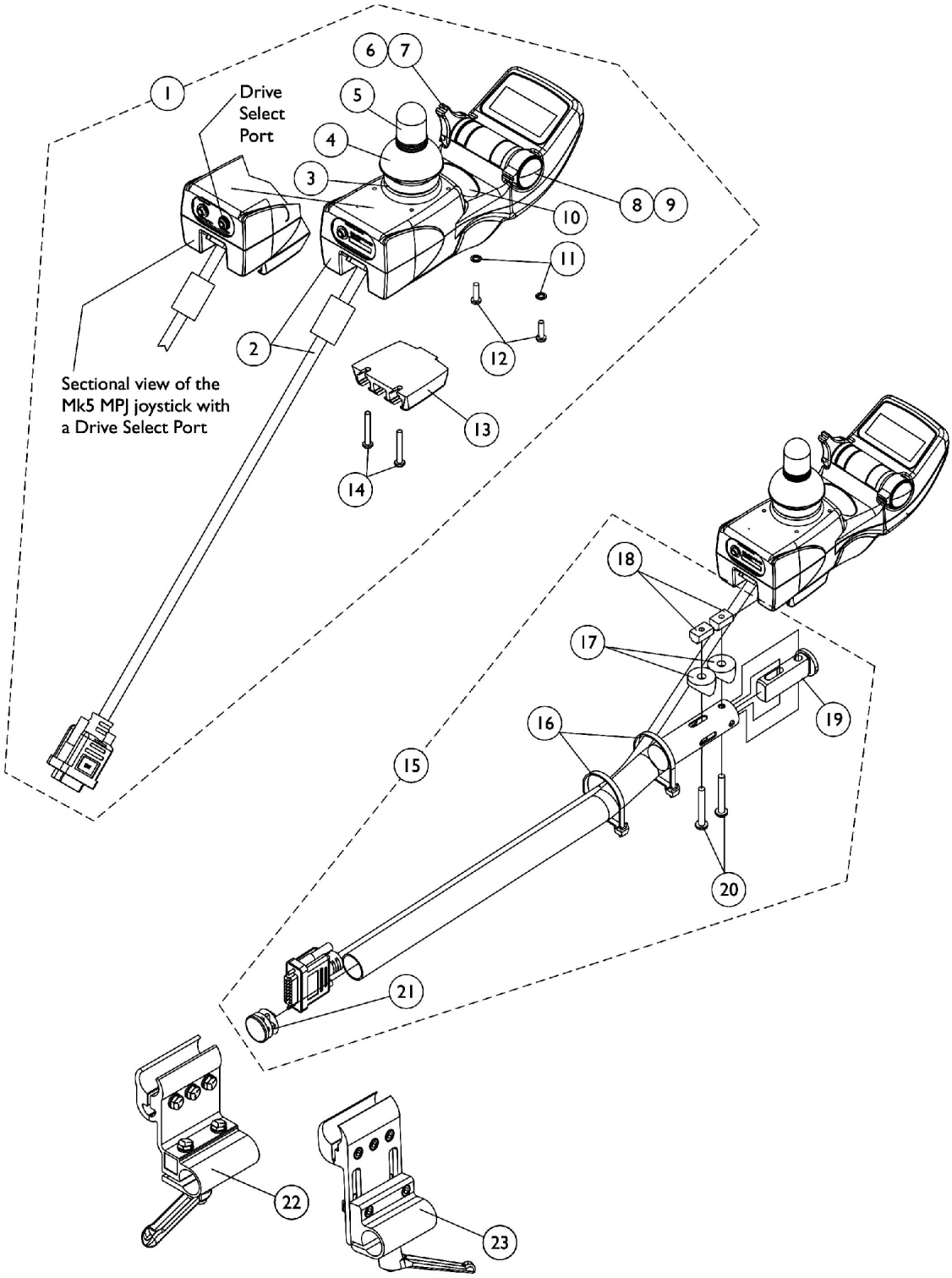

MK5 MPJ Joystick and Mounting Hardware

Item Number	Note	Part Number	Description	Quantity Per Package	Quantity Per Assembly
1	A	1115740-NLA	NLA - Joystick, MK5 MPJ	1	1
1	A	1115740E-NLA	NLA - WARR RPLMT - Joystick, MK5 MPJ	1	1
1	A	1122214-NLA	NLA - Joystick, MK5 MPJ with Drive Select Port	1	1
2		1117038-NLA	NLA - Joystick Bottom and Cable Assembly, MK5 MPJ	1	1
3		1115235-NLA	NLA - Inductive, MK5 MPJ/ DPJ/ SPJ-80 Joystick	1	1
4		1040218	Skirt, Joystick Rubber, Black	1	1
5		1040217	Knob, Joystick Rubber, Black	1	1
6		1115237-NLA	NLA - Switch Assembly, Power/ Drive Select MK5 MPJ	1	1
7		1115214-NLA	NLA - Knob, Power/Drive Select - MK5/MK6i MPJ	1	1
8		1115239-NLA	NLA - Potentiometer Assembly, Speed MK5 MPJ	1	1
9		1115233-NLA	NLA - Knob, Speed Potentiometer - MK5 MPJ	1	1
9		1139998-NLA	NLA - Knob, Speed Adjustment, Black - MK6i	1	1
10		1095497	Decal, Invacare Logo (1.6)	1	1
11		1008834-NLA	NLA - Lockwasher, Internal Tooth (#6)	1	2
12		1115242-NLA	NLA - Screw, Torx Thread Forming (#6-32 x 1/2")	1	2
13		1115503-NLA	NLA - Bracket, T-Nut Mounting	1	1
14		1115244	Screw, Torx Thread Forming (#6-32 x 1")	1	2
15	B	1115860-NLA	NLA - Joystick Offset Tube w/ Hardware, Black (1/2")	1	1
16		1095502-NLA	NLA - Package, Tie Wrap (11-1/2" L)	10	1
17		40157X019-NLA	NLA - Spacer, Coved (1/4 x 7/8 x 7/16")	1	2
18		1117216-NLA	NLA - T-Nut (#10-32)	1	2
19		1093063	Spacer, Joystick Tube, Black	1	1
20		1026107	Screw, Phillips Pan Head (#10-32 x 1-3/8")	1	2
21		1027095	Plug Button, Black (7/8")	1	1
22		1093071	Clamp, Fixed Height Joystick Tube	1	1
23	D	1139422	Clamp, Height Adjustable Joystick Tube (ARM250)	1	1
	C	1006270	Extension, Joystick, "T" Style (1560) (4" W x 5-1/2" L)	1	1
	C	1006271	Extension, Joystick, Straight Style (1561) (1/2" W x 5" L)	1	1

NOTE: A - Includes items 2-14.
B - Includes items 16-21.
C - Not Shown.
D - Introduced 10/31/05 as option (ARM250) and can be used to replace a Fixed Height Joystick Clamp in the field.

MK5 PSF/PSR Joysticks

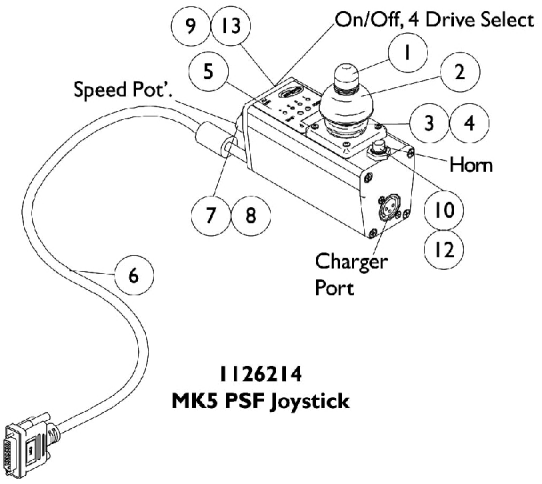

1126214
MK5 PSF Joystick

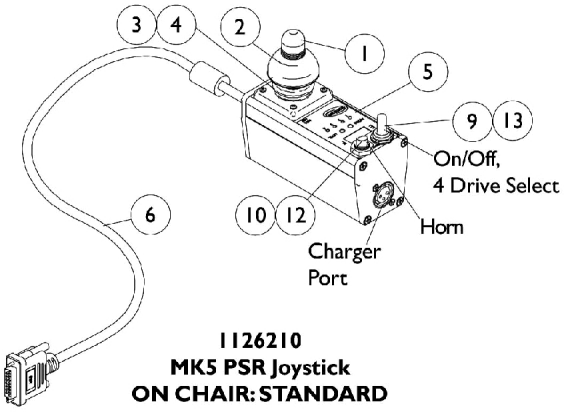

1126210
MK5 PSR Joystick
ON CHAIR: STANDARD

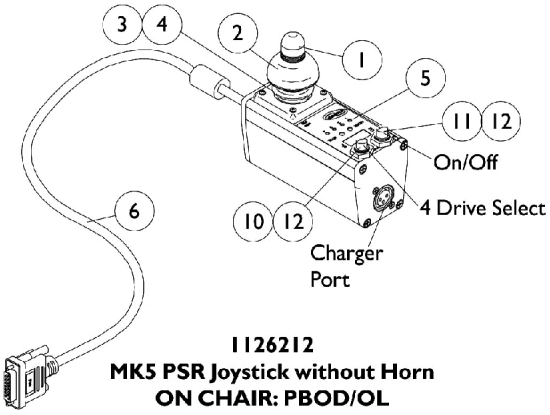

1126212
MK5 PSR Joystick without Horn
ON CHAIR: PBOD/OL

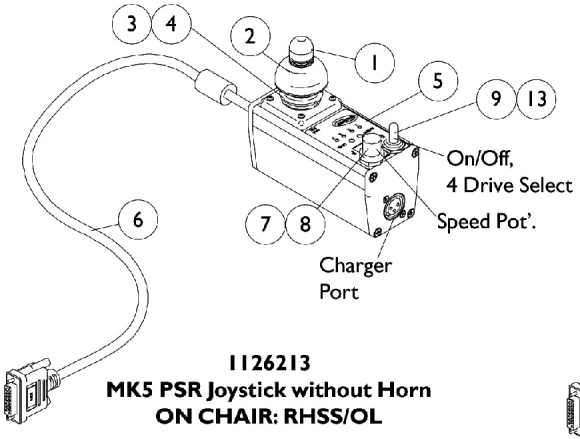

1126213
MK5 PSR Joystick without Horn
ON CHAIR: RHSS/OL

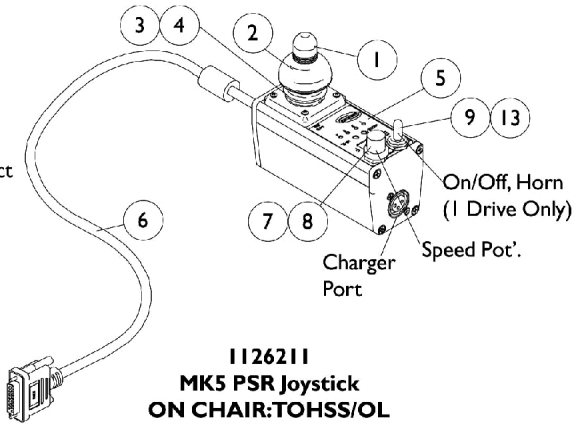

1126211
MK5 PSR Joystick
ON CHAIR:TOHSS/OL

MK5 PSF/PSR Joysticks

Item Number	Description	PSF	PSR
See Pictorial	Joystick Assembly	1126214-NLA	1126210-NLA See Note(s) F, E, A
See Pictorial	Joystick Assembly	N/A	1126212-NLA See Note(s) F, E, B
See Pictorial	Joystick Assembly	N/A	1126213-NLA See Note(s) F, E, C
See Pictorial	Joystick Assembly	N/A	1126211-NLA See Note(s) F, E, D
1	Knob, Joystick	1040217	1040217
2	Skirt, Joystick	1040218	1040218
3	Inductive, Joystick	1036764-NLA	1036764-NLA
4	Boot, Joystick	50000X364-NLA	50000X364-NLA
5	Overlay, Joystick Decal	1126184-NLA See Note(s) G	1126184-NLA See Note(s) G
6	Cable Assembly	1126191-NLA	1126191-NLA
7	Potentiometer, Speed	1040225-NLA	1040225-NLA
8	Knob, Potentiometer	1025516-NLA	1025516-NLA
9	Switch, On/Off Momentary	1040185-NLA	1040185-NLA
10	Switch, Push Button SPST Momentary	1010047-NLA	1010047-NLA
11	Switch, Push Button SPST	N/A	1010048-NLA
12	Boot, Switch	1010049-NLA	1010049-NLA
13	Boot, Switch	1058464-NLA	1058464-NLA

NOTE:
A - STANDARD: This PSR joystick includes a toggle on/off combined with a drive select and a push button horn. No speed selector.
B - PBOD: This PSR joystick includes push button on/off with a push button drive select. This gives you access to the four drives, but no horn and no speed select.
C - RHSS: This PSR joystick replaces the horn with a speed selector. This allows you to deviate from having a horn to having a speed selector dial, plus the drive selector to the four drives.
D - TOHSS: This PSR joystick includes a toggle on/off with horn and a speed select dial. You have access to only one drive.
E - OL: On/Off positioned on the left side of the PSR joystick and OR: On/Off positioned on right side of the PSR joystick.
F - PSR joystick configurations show the on/off switch on the left side. When the on/off switch is required on the right side, refer to part number 1126210 and order as a configurated part.
G - Overlay is no longer available. The Joystick must be returned to Invacare for repair.

MK5 NX-80 Controller, Programmer, Shroud Cover and Hardware

Introduced 10/20/03 on TDX3 Standard

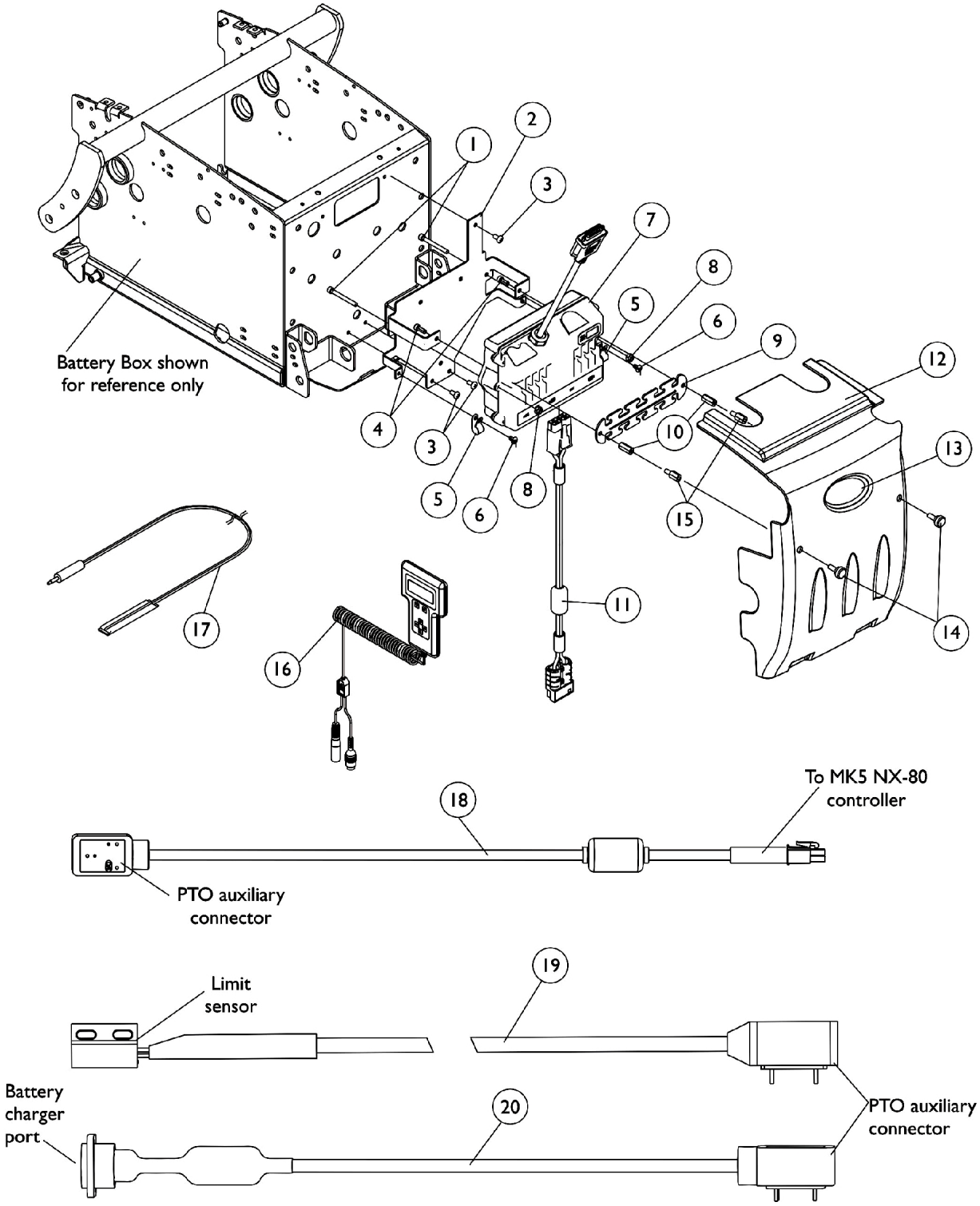

MK5 NX-80 Controller, Programmer, Shroud Cover and Hardware

Introduced 10/20/03 on TDX3 Standard

Item Number	Note	Part Number	Description	Quantity Per	
				Package	Assembly
1		1023966	Screw, Socket Head (#10-32 x 1-3/4")	1	2
2		1115829-NLA	NLA - Bracket, TDX Controller, Black	1	1
3		1022597	Screw, Phillips Pan Head Tap (#10-32 x 3/8")	1	3
4		1113438-NLA	NLA - 3Screw, Socket Head (#10-32 x 1/2")	1	2
5		1079245-NLA	NLA - Clamp, Cable	1	2
6		90017X000-NLA	NLA - Screw, Phillips Pan Head (#10-32 x 5/16")	1	2
7		1122191-NLA	NLA - Controller, MK5 NX-80	1	1
8		1025731	Locknut (#10-32)	1	2
9		1117194-NLA	NLA - Strip, Wiring	1	1
10		1113342-NLA	NLA - Stand-Off (#10-32 x 3/4")	1	2
11		60102824	Kit, Cable, Battery Extension	1	1
12		1113214-NLA	NLA - Cover with Decal, Controller Shroud	1	1
13		1095489	Decal, Invacare 3-D Logo (2-1/2" L)	1	1
14		1117240	Screw, Thumb (#10-32 x 1/2")	1	2
15		1120258-NLA	NLA - Stand-Off (10-32 x 1/2")	1	2
16		1109091-NLA	NLA - Programmer, Remote	1	1
17	E	1020818	Switch, Red Flex Ribbon (Tape) Reset	1	1
17	C,F	1123276	Kit, Switch, Black Egg Reset w/ Hook/Loop Adhesive Back Fastener & Attaching Screws (EGSBLK)	1	1
18	A	1119418	Cable, Auxiliary Power	1	1
19	B	1092913-NLA	NLA - Cable, Drive Lockout Sensor	1	1
20	D	1114500-NLA	NLA - Cable Option with Charger Connector	1	1
	C	1095204-NLA	NLA - Cable, Virtual Service, Charger/Modem	1	1

NOTE:
A - Used with MK5 NX-80 controller for Powered Seating Systems.
B - Cable sensor is used when a manual recliner is present
C - Not Shown
D - Cable Option with Charger Connector is present when a combination MKIV controller and joystick have been ordered as a "special" on-chair configuration.
E - Before 5/24/04
F - After 5/23/04 the Egg Reset Switch replaced the Red Flex Ribbon (Tape) Reset Switch

MK5 NX-80 Controller, Programmer, Shroud Cover and Hardware

For Invisible Super Low Tilt

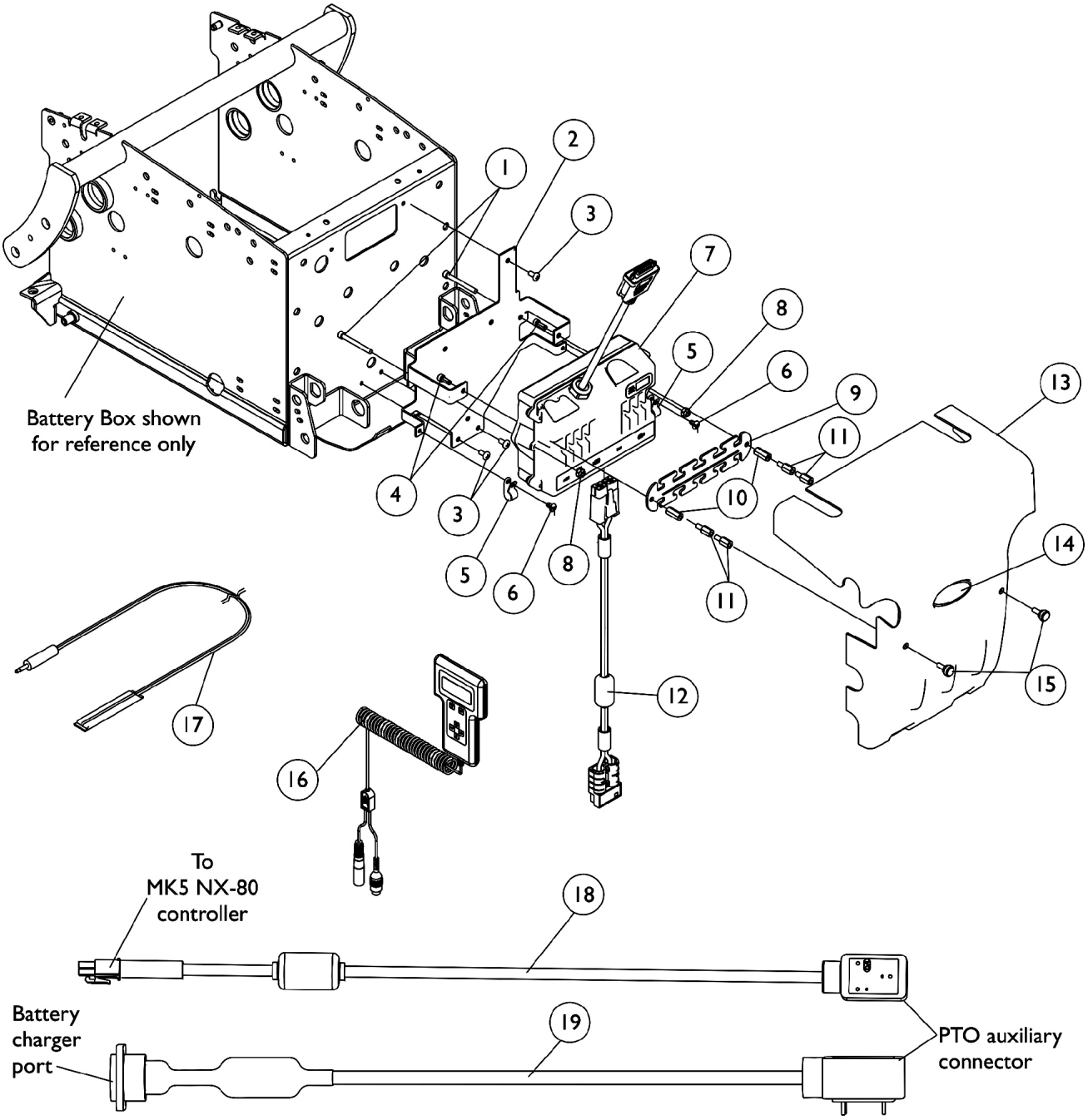

MK5 NX-80 Controller, Programmer, Shroud Cover and Hardware

For Invisible Super Low Tilt

Item Number	Note	Part Number	Description	Quantity Per Package	Quantity Per Assembly
1		1023966	Screw, Socket Head (#10-32 x 1-3/4")	1	2
2		1115829-NLA	NLA - Bracket, TDX Controller, Black	1	1
3		1022597	Screw, Phillips Pan Head Tap (#10-32 x 3/8")	1	3
4		1113438-NLA	NLA - 3Screw, Socket Head (#10-32 x 1/2")	1	2
5		1079245-NLA	NLA - Clamp, Cable	1	2
6		90017X000-NLA	NLA - Screw, Phillips Pan Head (#10-32 x 5/16")	1	2
7		1122191-NLA	NLA - Controller, MK5 NX-80	1	1
8		1025731	Locknut (#10-32)	1	2
9		1117194-NLA	NLA - Strip, Wiring	1	1
10		1113342-NLA	NLA - Stand-Off (#10-32 x 3/4")	1	2
11		1120258-NLA	NLA - Stand-Off (10-32 x 1/2")	1	4
12		60102824	Kit, Cable, Battery Extension	1	1
13		1120240-NLA	NLA - Cover with Decal, Controller Shroud	1	1
14		1095489	Decal, Invacare 3-D Logo (2-1/2" L)	1	1
15		1117240	Screw, Thumb (#10-32 x 1/2")	1	2
16		1109091-NLA	NLA - Programmer, Remote	1	1
17	D	1020818	Switch, Red Flex Ribbon (Tape) Reset	1	1
17	B,E	1123276	Kit, Switch, Black Egg Reset w/ Hook/Loop Adhesive Back Fastener & Attaching Screws (EGSBLK)	1	1
18	A	1119418	Cable, Auxiliary Power	1	1
	C	1114500-NLA	NLA - Cable Option with Charger Connector	1	1
	B	1095204-NLA	NLA - Cable, Virtual Service, Charger/Modem	1	1

NOTE:
A - Used with MK5 NX-80 controller for Powered Seating Systems.
B - Not Shown
C - Cable Option with Charger Connector is present when a combination MKIV controller and joystick have been ordered as a "special" on-chair configuration.
D - Before 5/24/04
E - After 5/23/04 the Egg Reset Switch replaced the Red Flex Ribbon (Tape) Reset Switch

MK5 NX-80 Controller, Programmer, Shroud Cover and Hardware

For TRRO/TRBKTS Option

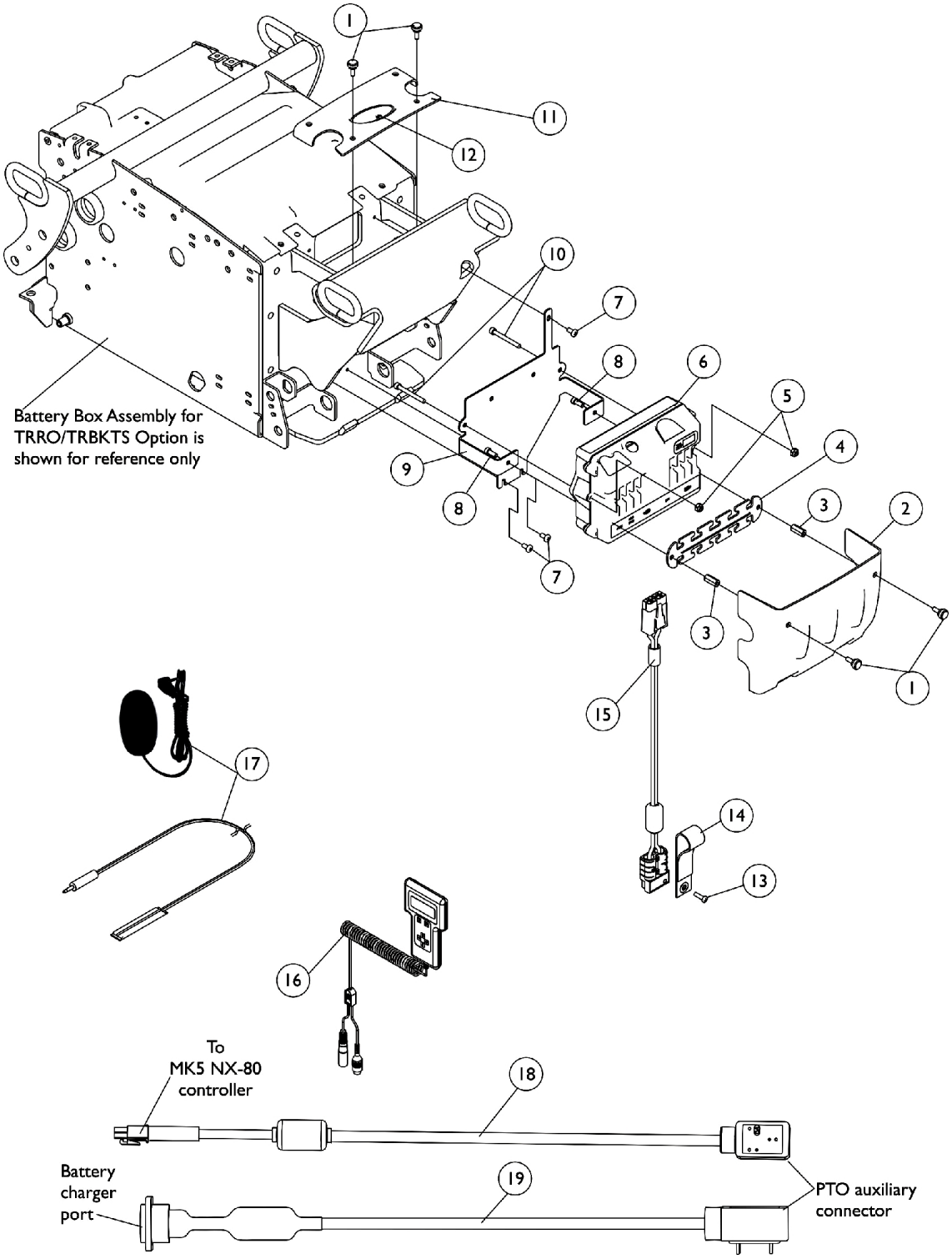

MK5 NX-80 Controller, Programmer, Shroud Cover and Hardware

For TRRO/TRBKTS Option

Item Number	Note	Part Number	Description	Quantity Per Package	Quantity Per Assembly
1		1117240	Screw, Thumb (#10-32 x 1/2")	1	4
2		1137243-NLA	NLA - Cover, Controller Rear Shroud TRRO/TRBKTS	1	1
3		1113342-NLA	NLA - Stand-Off (#10-32 x 3/4")	1	2
4		1117194-NLA	NLA - Strip, Wiring	1	1
5		1025731	Locknut (#10-32)	1	2
6		1122191-NLA	NLA - Controller, MK5 NX-80	1	1
7		1022597	Screw, Phillips Pan Head Tap (#10-32 x 3/8")	1	3
8		1113438-NLA	NLA - 3Screw, Socket Head (#10-32 x 1/2")	1	2
9		1133754-NLA	NLA - Bracket, Controller Mounting, Black	1	1
10		1023966	Screw, Socket Head (#10-32 x 1-3/4")	1	2
11		1139532-NLA	NLA - Cover, Controller Top Shroud	1	1
12		1095489	Decal, Invacare 3-D Logo (2-1/2" L)	1	1
13		1114276	Screw, Phillips Pan Head (#8-16 x 5/8")	1	1
14		1113331-NLA	NLA - Strap, Battery Plug Pull	1	1
15		60102824	Kit, Cable, Battery Extension	1	1
16		1109091-NLA	NLA - Programmer, Remote	1	1
17	D	1020818	Switch, Red Flex Ribbon (Tape) Reset	1	1
17	E	1123276	Kit, Switch, Black Egg Reset w/ Hook/Loop Adhesive Back Fastener & Attaching Screws (EGSBLK)	1	1
18	A	1119418	Cable, Auxiliary Power	1	1
19	B	1114500-NLA	NLA - Cable Option with Charger Connector	1	1
	C	1095204-NLA	NLA - Cable, Virtual Service, Charger/Modem	1	1

NOTE:
A - Used with MK5 NX-80 controller for Powered Seating Systems
B - Cable Option with Charger Connector is present when a combination MKIV controller and joystick have been ordered as a "special" on-chair configuration
C - Not Shown
D - Before 5/24/04
E - After 5/23/04 the Egg Reset Switch replaced the Red Flex Ribbon (Tape) Reset Switch

MK5 EX Controller, Programmer, Shroud Cover and Hardware

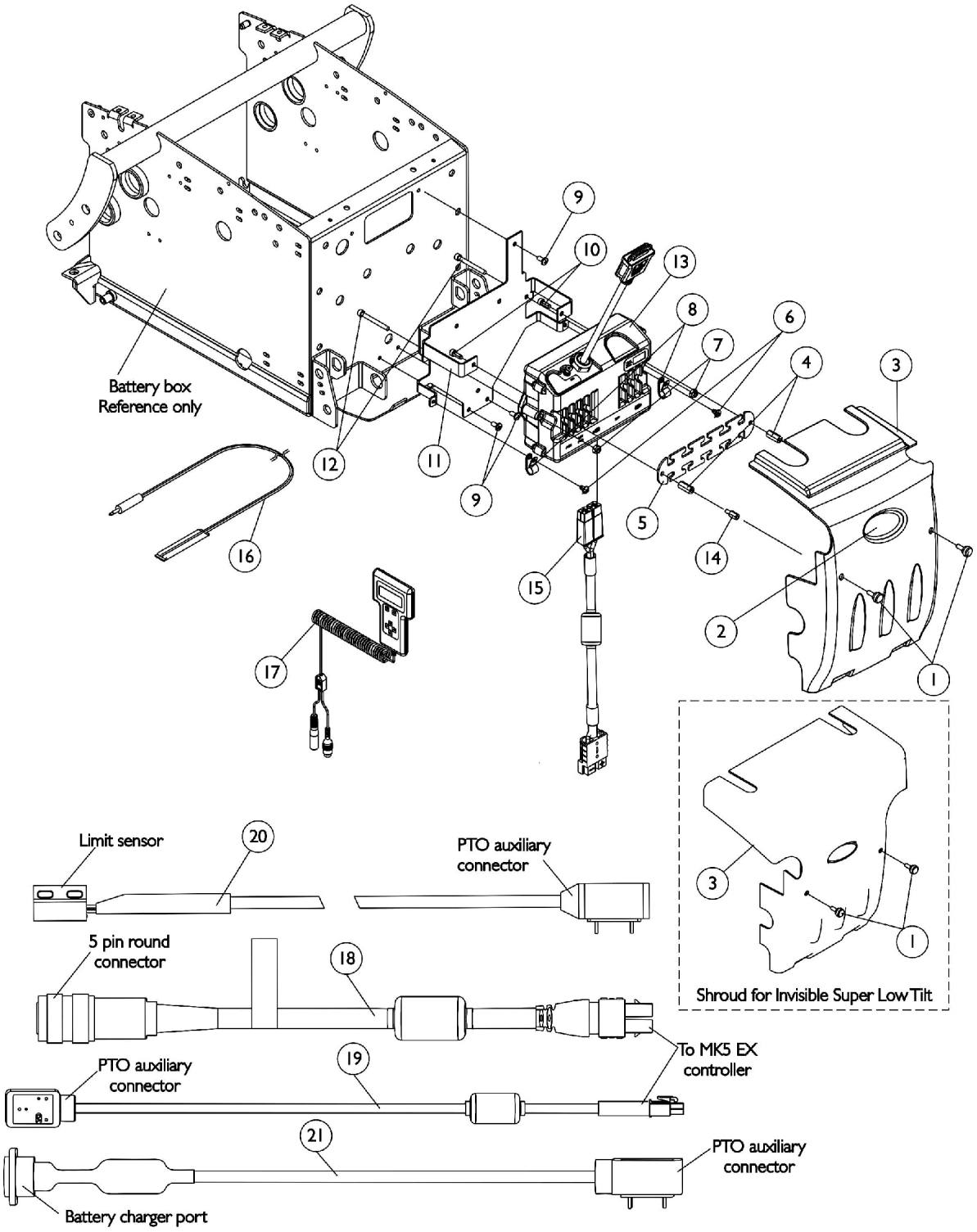

MK5 EX Controller, Programmer, Shroud Cover and Hardware

Item Number	Note	Part Number	Description	Quantity Per	
				Package	Assembly
1		1117240	Screw, Thumb (#10-32 x 1/2")	1	2
2		1095489	Decal, Invacare 3-D Logo (2-1/2" L)	1	1
3		1113214-NLA	NLA - Cover with Decal, Controller Shroud	1	1
3	C	1120240-NLA	NLA - Cover with Decal, Controller Shroud	1	1
4		1113342-NLA	NLA - Stand-Off (#10-32 x 3/4")	1	2
5		1117194-NLA	NLA - Strip, Wiring	1	1
6		90017X000-NLA	NLA - Screw, Phillips Pan Head (#10-32 x 5/16")	1	2
7		1025731	Locknut (#10-32)	1	2
8		1079245-NLA	NLA - Clamp, Cable	1	2
9		1022597	Screw, Phillips Pan Head Tap (#10-32 x 3/8")	1	3
10		1113438-NLA	NLA - 3Screw, Socket Head (#10-32 x 1/2")	1	2
11		1115829-NLA	NLA - Bracket, TDX Controller, Black	1	1
12		1023966	Screw, Socket Head (#10-32 x 1-3/4")	1	2
13	G,H	1115750-NLA	NLA - Controller, MK5 EX	1	1
14	E	1120258-NLA	NLA - Stand-Off (10-32 x 1/2")	1	2
15		1116381	Cable, Battery Extension, Black Connector	1	1
16	J	1020818	Switch, Red Flex Ribbon (Tape) Reset	1	1
16	F,K	1123276	Kit, Switch, Black Egg Reset w/ Hook/Loop Adhesive Back Fastener & Attaching Screws (EGSBLK)	1	1
17		1109091-NLA	NLA - Programmer, Remote	1	1
18	A	1118231-NLA	NLA - Cable, MK5 EX Controller Option	1	1
19	B	1119418	Cable, Auxiliary Power	1	1
20	D	1092913-NLA	NLA - Cable, Drive Lockout Sensor	1	1
21	I,I1	1114500-NLA	NLA - Cable Option with Charger Connector	1	1
	F	1095204-NLA	NLA - Cable, Virtual Service, Charger/Modem	1	1

NOTE:
A - The 5 pin connector attaches to MKIV options, MK5 T.A.C. or MK5 T.R.C.M. controllers.
B - Used with MK5 EX controllers for Powered Seating Systems.
C - Used on Super Low Tilt system
D - Sensor cable used when a manual recliner is present
E - Item 14 is increased to a quantity of 4 when an Invisible Super Low Tilt is present
F - Not Shown
G - The MK5 EX controller WILL NOT operate a chair with TrueTrack GB motors. For GB motors, you must use the MK5 TT (TrueTrack) EX controller.
H - Item 19 Auxiliary Power Cable must be used to operate any powered seating system.
I - Cable Option with Charger Connector is present when a combination MKIV controller and joystick have been ordered as a "special" on-chair configuration.
I1 - When a MKIV joystick is ordered "special" on-chair to adapt to a MK5 EX controller, a (6 pin to 15 pin adapter cable) will be present. A replacement (6 pin to 15 pin adapter cable) must be ordered from ASL (Adaptive Switch Labs) at 1-800-626-8698
J - Before 5/24/04
K - After 5/23/04 the Egg Reset Switch replaced the Red Flex Ribbon (Tape) Reset Switch

MK5 EX Controller, Programmer, Shroud Cover and Hardware

For TRRO/TRBKTS Option

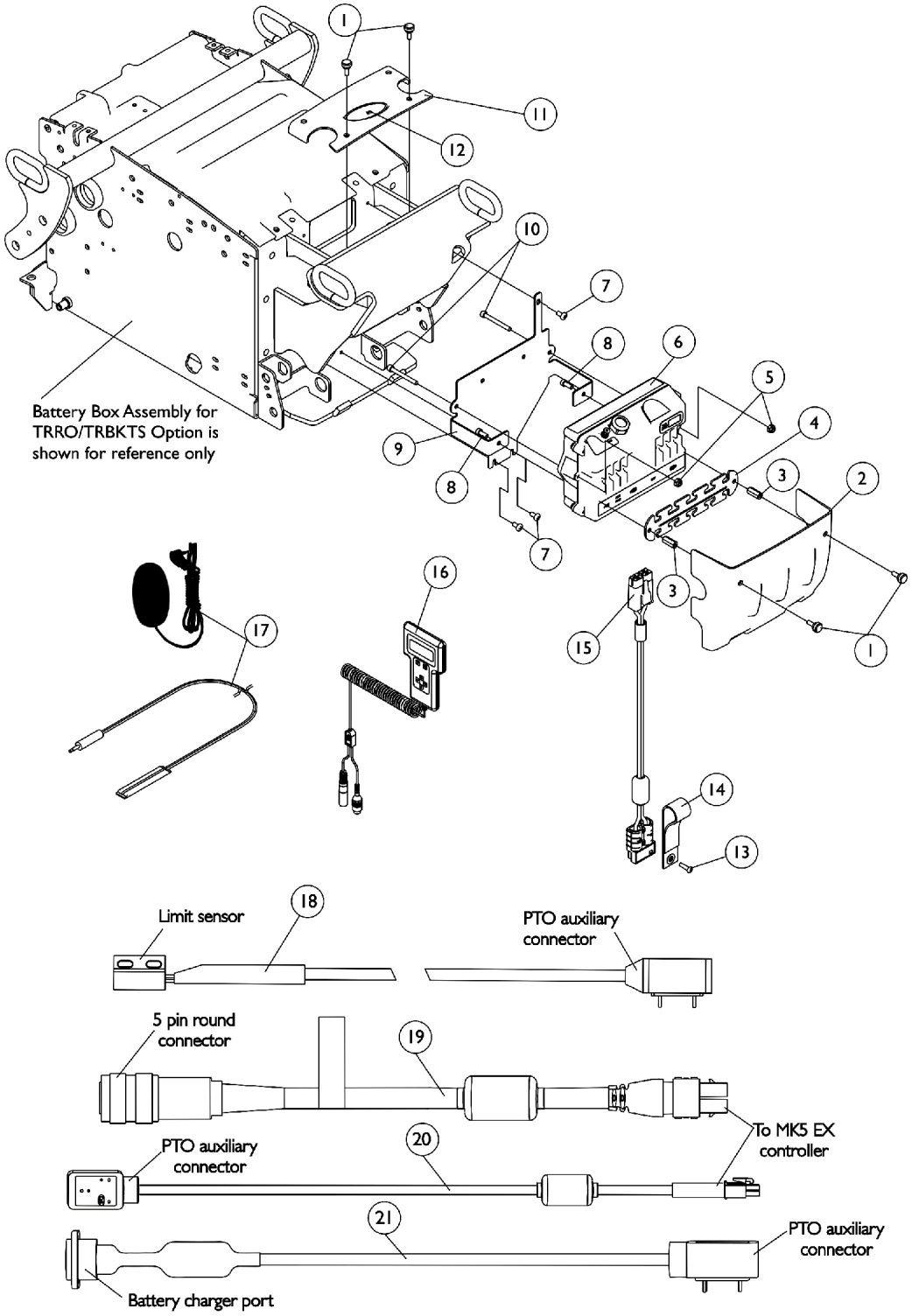

MK5 EX Controller, Programmer, Shroud Cover and Hardware

For TRRO/TRBKTS Option

Item Number	Note	Part Number	Description	Quantity Per Package	Quantity Per Assembly
1		1117240	Screw, Thumb (#10-32 x 1/2")	1	4
2		1137243-NLA	NLA - Cover, Controller Rear Shroud TRRO/TRBKTS	1	1
3		1113342-NLA	NLA - Stand-Off (#10-32 x 3/4")	1	2
4		1117194-NLA	NLA - Strip, Wiring	1	1
5		1025731	Locknut (#10-32)	1	2
6	D,E	1115750-NLA	NLA - Controller, MK5 EX	1	1
7		1022597	Screw, Phillips Pan Head Tap (#10-32 x 3/8")	1	3
8		1113438-NLA	NLA - 3Screw, Socket Head (#10-32 x 1/2")	1	2
9		1133754-NLA	NLA - Bracket, Controller Mounting, Black	1	1
10		1023966	Screw, Socket Head (#10-32 x 1-3/4")	1	2
11		1139532-NLA	NLA - Cover, Controller Top Shroud	1	1
12		1095489	Decal, Invacare 3-D Logo (2-1/2" L)	1	1
13		1114276	Screw, Phillips Pan Head (#8-16 x 5/8")	1	1
14		1113331-NLA	NLA - Strap, Battery Plug Pull	1	1
15		60102824	Kit, Cable, Battery Extension	1	1
16		1109091-NLA	NLA - Programmer, Remote	1	1
17	G	1020818	Switch, Red Flex Ribbon (Tape) Reset	1	1
17	H	1123276	Kit, Switch, Black Egg Reset w/ Hook/Loop Adhesive Back Fastener & Attaching Screws (EGSBLK)	1	1
18		1092913-NLA	NLA - Cable, Drive Lockout Sensor	1	1
19	A	1118231-NLA	NLA - Cable, MK5 EX Controller Option	1	1
20	B	1119418	Cable, Auxiliary Power	1	1
21	F,F1	1114500-NLA	NLA - Cable Option with Charger Connector	1	1
	C	1095204-NLA	NLA - Cable, Virtual Service, Charger/Modem	1	1

NOTE:
A - The 5 pin connector attaches to MKIV options, MK5 T.A.C. or MK5 T.R.C.M. controllers
B - Used with MK5 EX controllers for Powered Seating Systems
C - Not Shown
D - The MK5 EX controller WILL NOT operate a chair with TrueTrack GB motors. For GB motors, you must use the MK5 TT (TrueTrack) EX controller.
E - Item 20 Auxiliary Power Cable must be used to operate any powered seating system.
F - Cable Option with Charger Connector is present when a combination MKIV controller and joystick have been ordered as a "special" on-chair configuration.
F1 - When a MKIV joystick is ordered "special" on-chair to adapt to a MK5 EX controller, a (6 pin to 15 pin adapter cable) will be present. A replacement (6 pin to 15 pin adapter cable) must be ordered from ASL (Adaptive Switch Labs) at 1-800-626-8698
G - Before 5/24/04
H - After 5/23/04 the Egg Reset Switch replaced the Red Flex Ribbon (Tape) Reset Switch

MK5 TT (TrueTrack) EX Controller, Programmer, Shroud Cover and Hardware

NOTE: The MK5 TT (TrueTrack) EX Controller is used to operate a chair with GB (Gearless/Brushless) motors only.

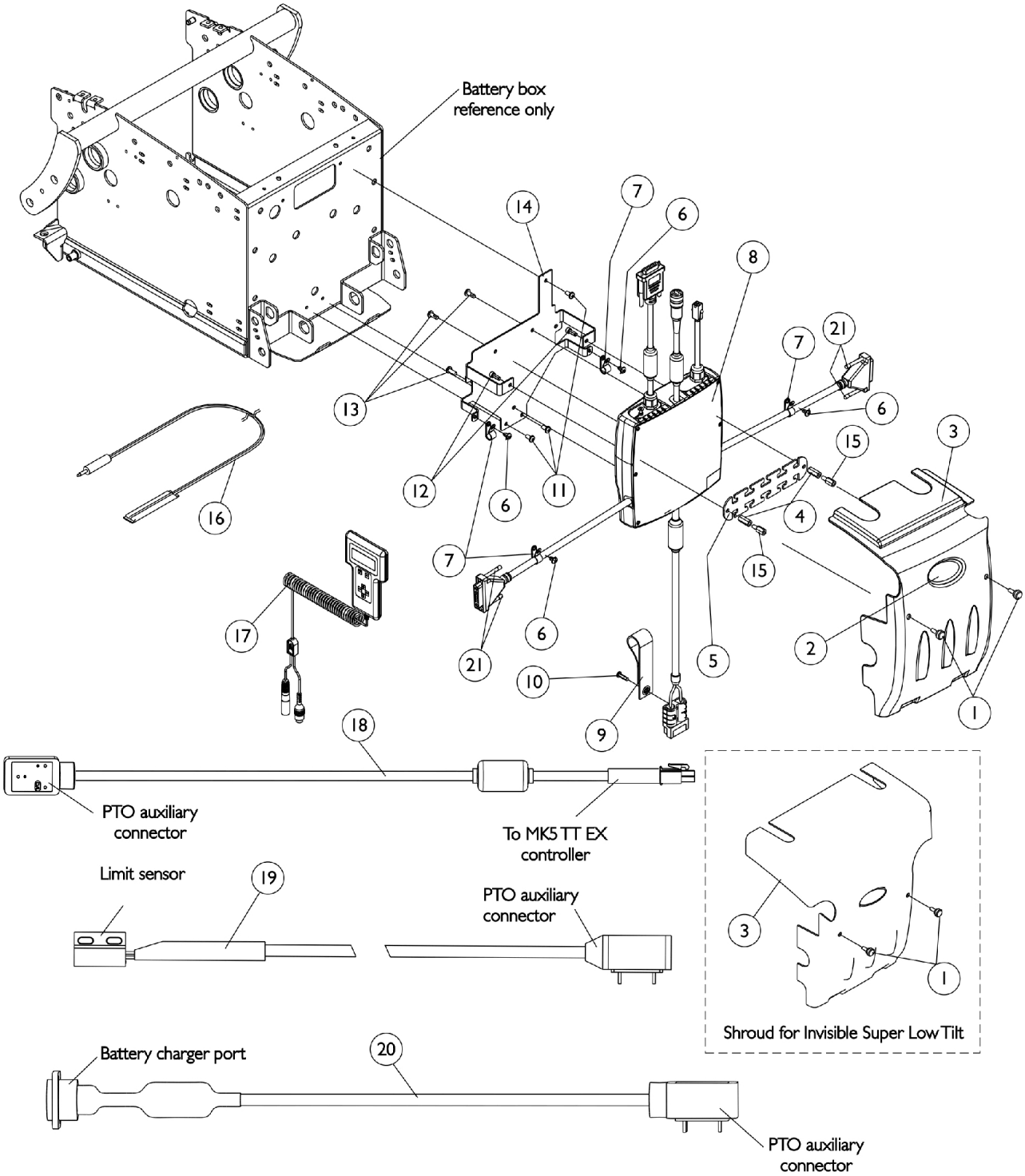

MK5 TT (TrueTrack) EX Controller, Programmer, Shroud Cover and Hardware

NOTE: The MK5 TT (TrueTrack) EX Controller is used to operate a chair with GB (Gearless/Brushless) motors only.

Item Number	Note	Part Number	Description	Quantity Per	
				Package	Assembly
1		1117240	Screw, Thumb (#10-32 x 1/2")	1	2
2		1095489	Decal, Invacare 3-D Logo (2-1/2" L)	1	1
3		1113214-NLA	NLA - Cover with Decal, Controller Shroud	1	1
3	B	1120240-NLA	NLA - Cover with Decal, Controller Shroud	1	1
4		1113342-NLA	NLA - Stand-Off (#10-32 x 3/4")	1	2
5		1117194-NLA	NLA - Strip, Wiring	1	1
6	H	90017X000-NLA	NLA - Screw, Phillips Pan Head (#10-32 x 5/16")	1	4
7	H	1079245-NLA	NLA - Clamp, Cable	1	4
8	F,F1,H, L	1145076-NLA	NLA - See Footnotes - Part is no longer a repairable item	1	1
9		1113331-NLA	NLA - Strap, Battery Plug Pull	1	1
10		1114276	Screw, Phillips Pan Head (#8-16 x 5/8")	1	1
11		1022597	Screw, Phillips Pan Head Tap (#10-32 x 3/8")	1	3
12		1113438-NLA	NLA - 3Screw, Socket Head (#10-32 x 1/2")	1	2
13		1104259	Screw, Phillips Pan Head w/ Patch (#10-32 x 1/2")	1	3
14		1115829-NLA	NLA - Bracket, TDX Controller, Black	1	1
15	D	1120258-NLA	NLA - Stand-Off (10-32 x 1/2")	1	2
16	I	1020818	Switch, Red Flex Ribbon (Tape) Reset	1	1
16	E,J	1123276	Kit, Switch, Black Egg Reset w/ Hook/Loop Adhesive Back Fastener & Attaching Screws (EGSBLK)	1	1
17		1109091-NLA	NLA - Programmer, Remote	1	1
18	A	1119418	Cable, Auxiliary Power	1	1
19	C	1092913-NLA	NLA - Cable, Drive Lockout Sensor	1	1
20	G,G1	1114500-NLA	NLA - Cable Option with Charger Connector	1	1
21		1159217	Package, Thumb Screw (1-1/2" L)	10	1
	E	1095204-NLA	NLA - Cable, Virtual Service, Charger/Modem	1	1
	E	1145761	Instruction Sheet, MK5 TT-EX Controller Installation	1	1
	E,K,K1	1134214	Kit, GB HD Controller Gasket Connector	1	1

MK5 TT (TrueTrack) EX Controller, Programmer, Shroud Cover and Hardware

NOTE: The MK5 TT (TrueTrack) EX Controller is used to operate a chair with GB (Gearless/Brushless) motors only.

NOTE:
- A - Used with MK5 TT (TrueTrack) EX controller for Powered Seating Systems.
- B - Used on Super Low Tilt system
- C - Cable sensor is used when a manual recliner is present
- D - Item 15 is increased to a quantity of 4 when an Invisible Super Low Tilt is present
- E - Not Shown
- F - Kit includes the Controller, Instruction Sheet and a Controller Gasket Kit part #1134214. Part # 1112979 labeled on the controller is listed for reference only, refer to kit #1145076 when ordering. The MK5 TT EX Controller is used for GB Motors only.
- F1 - Item #18 Power Auxillary Cable is required to function any powered seating system.
- G - Cable Option with Charger Connector is present when a combination MKIV controller and joystick have been ordered as a "special" on-chair configuration.
- G1 - When a MKIV joystick is ordered "special" on-chair to adapt to a MK5 EX controller, a (6 pin to 15 pin adapter cable) will be present. A replacement (6 pin to 15 pin adapter cable) must be ordered from ASL (Adaptive Switch Labs) at 1-800-626-8698
- H - After 6/16/05 the MK5 TTEX Controller motor cables were shortened from approximately 12" to 9". Items 6 and 7 are no longer used after 6/16/05.
- I - Before 5/24/04
- J - After 5/23/04 the Egg Reset Switch replaced the Red Flex Ribbon (Tape) Reset Switch
- K - Kit was created 10/26/07 and attaches to the controller motor cables. Includes 2 ea. GB HD Controller Gasket Connectors, 2 ea. Silicon Lubricant Packets, 1 ea. Instruction Sheet. Individual components are non-saleable.
- K1 - The kit can retrofit to existing GB HD controllers in the field
- L - Part #1145076 "Kit, MK5 TT-EX Controller w/ Installation Instruction Sheet" is no longer available for sale. As of 7/24/13 the MK5 TT (TrueTrack) EX Controller is no longer a repairable item.

MK5 TT (TrueTrack) EX Controller, Programmer, Shroud Cover and Hardware

For TRRO/TRBKTS Option

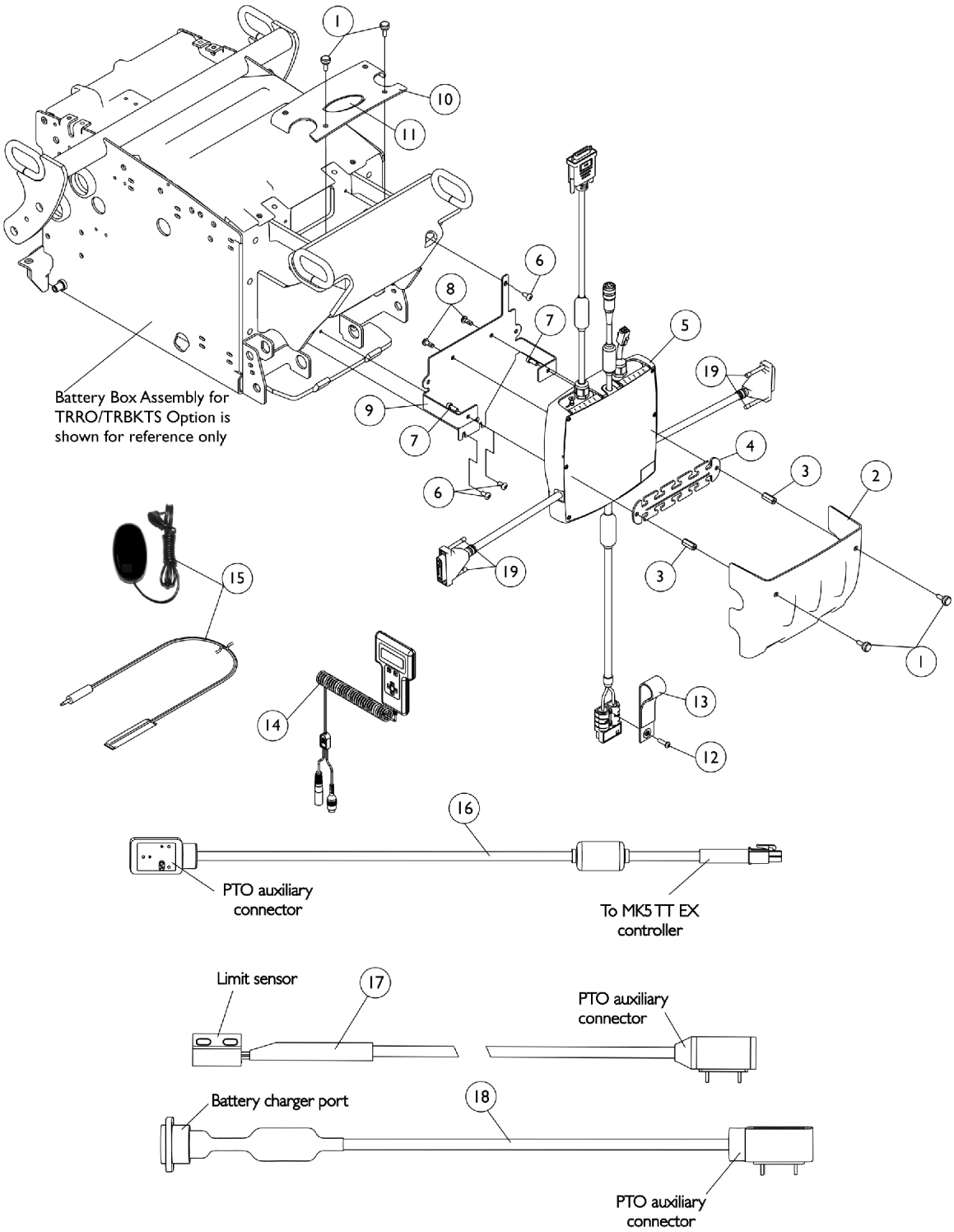

MK5 TT (TrueTrack) EX Controller, Programmer, Shroud Cover and Hardware

For TRRO/TRBKTS Option

Item Number	Note	Part Number	Description	Quantity Per Package	Quantity Per Assembly
1		1117240	Screw, Thumb (#10-32 x 1/2")	1	4
2		1137243-NLA	NLA - Cover, Controller Rear Shroud TRRO/TRBKTS	1	1
3		1113342-NLA	NLA - Stand-Off (#10-32 x 3/4")	1	2
4		1117194-NLA	NLA - Strip, Wiring	1	1
5	D,D1,I	1145076-NLA	NLA - See Footnotes - Part is no longer a repairable item	1	1
6		1022597	Screw, Phillips Pan Head Tap (#10-32 x 3/8")	1	3
7		1113438-NLA	NLA - 3Screw, Socket Head (#10-32 x 1/2")	1	2
8		1104259	Screw, Phillips Pan Head w/ Patch (#10-32 x 1/2")	1	3
9		1133754-NLA	NLA - Bracket, Controller Mounting, Black	1	1
10		1139532-NLA	NLA - Cover, Controller Top Shroud	1	1
11		1095489	Decal, Invacare 3-D Logo (2-1/2" L)	1	1
12		1114276	Screw, Phillips Pan Head (#8-16 x 5/8")	1	1
13		1113331-NLA	NLA - Strap, Battery Plug Pull	1	1
14		1109091-NLA	NLA - Programmer, Remote	1	1
15	F	1020818	Switch, Red Flex Ribbon (Tape) Reset	1	1
15	G	1123276	Kit, Switch, Black Egg Reset w/ Hook/Loop Adhesive Back Fastener & Attaching Screws (EGSBLK)	1	1
16	A	1119418	Cable, Auxiliary Power	1	1
17	B	1092913-NLA	NLA - Cable, Drive Lockout Sensor	1	1
18	E,E1	1114500-NLA	NLA - Cable Option with Charger Connector	1	1
19		1159217	Package, Thumb Screw (1-1/2" L)	10	1
	C	1095204-NLA	NLA - Cable, Virtual Service, Charger/Modem	1	1
	C	1145761	Instruction Sheet, MK5 TT-EX Controller Installation	1	1
	C,H,H1	1134214	Kit, GB HD Controller Gasket Connector	1	1

NOTE:
A - Used with MK5 TT (TrueTrack) EX controller for Powered Seating Systems.
B - Cable sensor is used when a manual recliner is present
C - Not Shown
D - Kit includes the Controller, Instruction Sheet and a Controller Gasket Kit part #1134214. Part # 1112979 labeled on the controller is listed for reference only, refer to kit #1145076 when ordering. The MK5 TT EX Controller is used for GB Motors only.
D1 - Item #16 Power Auxillary Cable is required to function any powered seating system.
E - Cable Option with Charger Connector is present when a combination MKIV controller and joystick have been ordered as a "special" on-chair configuration.
E1 - When a MKIV joystick is ordered "special" on-chair to adapt to a MK5 EX controller, a (6 pin to 15 pin adapter cable) will be present. A replacement (6 pin to 15 pin adapter cable) must be ordered from ASL (Adaptive Switch Labs) at 1-800-626-8698
F - Before 5/24/04
G - After 5/23/04 the Egg Reset Switch replaced the Red Flex Ribbon (Tape) Reset Switch
H - Kit was created 10/26/07 and attaches to the controller motor cables. Includes 2 ea. GB HD Controller Gasket Connectors, 2 ea. Silicon Lubricant Packets, 1 ea. Instruction Sheet. Individual components are non-saleable.
H1 - The kit can retrofit to existing GB HD controllers in the field
I - Part #1145076 "Kit, MK5 TT-EX Controller w/ Installation Instruction Sheet" is no longer available for sale. As of 7/24/13 the MK5 TT (TrueTrack) EX Controller is no longer a repairable item.

Quad Link
Before 10/9/03

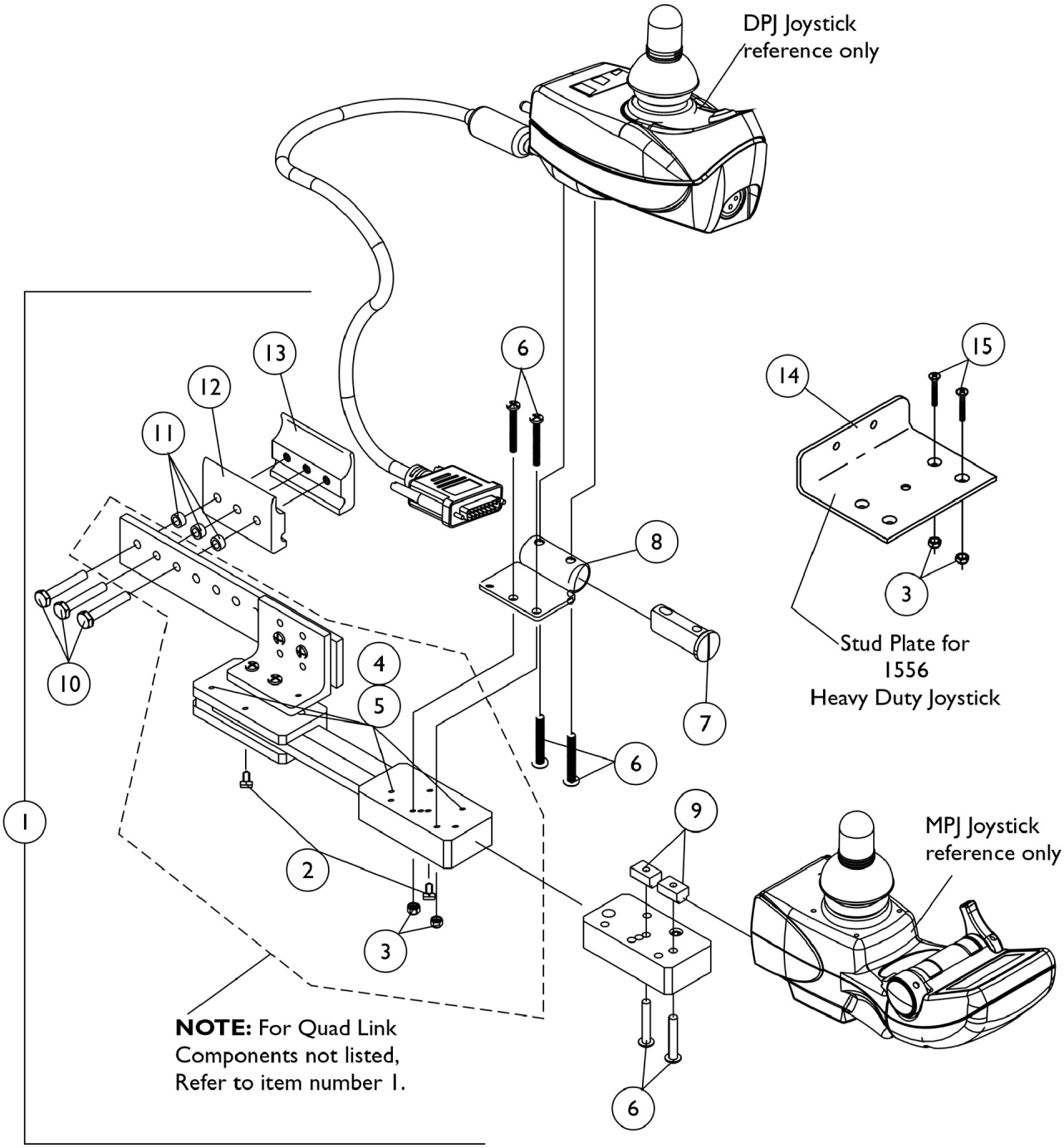

Quad Link
Before 10/9/03

Item Number	Note	Part Number	Description	Quantity Per Package	Quantity Per Assembly
1	A	1052402-NLA	NLA - Kit, Quad Link Assembly - Right	1	1
2			NLA - Ball Plunger Assembly with Lock Washer	2	1
3			Locknut (#10-32)	1	2
4			NLA - Screw, Cap, Socket Head (#10-32 x 1/2")	1	4
5			NLA - Bushing, Bronze (3/16 x 1/4 x 1/4")	1	4
6			Screw, Phillips Pan Head (#10-32 x 1-1/8")	1	4
7			Spacer, Joystick Tube, Black	1	1
8			NLA - Stud Plate, Quad Link	1	1
10			Screw, Hex Head (1/4-20 x 1-1/2")	1	3
11			NLA - Spacer (1/4 x 3/8 x 3/16")	1	3
12			Half Clamp, Non-Threaded Holes	1	1
13			NLA - Half Clamp, Threaded Holes	1	1
1	A	1115372-NLA	NLA - Kit, Quad Link Assembly - Left	1	1
2			NLA - Ball Plunger Assembly with Lock Washer	2	1
3			Locknut (#10-32)	1	2
4			NLA - Screw, Cap, Socket Head (#10-32 x 1/2")	1	4
5			NLA - Bushing, Bronze (3/16 x 1/4 x 1/4")	1	4
6			Screw, Phillips Pan Head (#10-32 x 1-1/8")	1	4
7			Spacer, Joystick Tube, Black	1	1
8			NLA - Stud Plate, Quad Link	1	1
10			Screw, Hex Head (1/4-20 x 1-1/2")	1	3
11			NLA - Spacer (1/4 x 3/8 x 3/16")	1	3
12			Half Clamp, Non-Threaded Holes	1	1
13			NLA - Half Clamp, Threaded Holes	1	1
1	B	1117278-NLA	NLA - Kit, Quad Link Assembly - Right	1	1
2			NLA - Ball Plunger Assembly with Lock Washer	2	1
3			Locknut (#10-32)	1	2
4			NLA - Screw, Cap, Socket Head (#10-32 x 1/2")	1	4
5			NLA - Bushing, Bronze (3/16 x 1/4 x 1/4")	1	4
6			Screw, Phillips Pan Head (#10-32 x 1-1/8")	1	2
9			NLA - T-Nut (#10-32)	1	2
10			Screw, Hex Head (1/4-20 x 1-1/2")	1	3
11			NLA - Spacer (1/4 x 3/8 x 3/16")	1	3
12			Half Clamp, Non-Threaded Holes	1	1
13			NLA - Half Clamp, Threaded Holes	1	1
1	B	1117239-NLA	NLA - Kit, Quad Link Assembly - Left	1	1
2			NLA - Ball Plunger Assembly with Lock Washer	2	1
3			Locknut (#10-32)	1	2
4			NLA - Screw, Cap, Socket Head (#10-32 x 1/2")	1	4
5			NLA - Bushing, Bronze (3/16 x 1/4 x 1/4")	1	4
6			Screw, Phillips Pan Head (#10-32 x 1-1/8")	1	2
9			NLA - T-Nut (#10-32)	1	2
10			Screw, Hex Head (1/4-20 x 1-1/2")	1	3

Quad Link
Before 10/9/03

Item Number	Note	Part Number	Description	Quantity Per Package	Quantity Per Assembly
11			NLA - Spacer (1/4 x 3/8 x 3/16")	1	3
12			Half Clamp, Non-Threaded Holes	1	1
13			NLA - Half Clamp, Threaded Holes	1	1
1	C,D	1034703-NLA	NLA - Kit, Quad Link Assembly - Right	1	1
2			NLA - Ball Plunger Assembly with Lock Washer	2	1
3			Locknut (#10-32)	1	2
4			NLA - Screw, Cap, Socket Head (#10-32 x 1/2")	1	4
5			NLA - Bushing, Bronze (3/16 x 1/4 x 1/4")	1	4
10			Screw, Hex Head (1/4-20 x 1-1/2")	1	3
11			NLA - Spacer (1/4 x 3/8 x 3/16")	1	3
12			Half Clamp, Non-Threaded Holes	1	1
13			NLA - Half Clamp, Threaded Holes	1	1
14			Plate, Stud, Quad Link For 1556 Heavy Duty Joystick	1	1
15			Screw, Phillips Flat Head (#10-32 x 1-1/8")	1	2
1	C	1114866-NLA	NLA - Kit, Quad Link Assembly - Left	1	1
2			NLA - Ball Plunger Assembly with Lock Washer	2	1
3			Locknut (#10-32)	1	2
4			NLA - Screw, Cap, Socket Head (#10-32 x 1/2")	1	4
5			NLA - Bushing, Bronze (3/16 x 1/4 x 1/4")	1	4
10			Screw, Hex Head (1/4-20 x 1-1/2")	1	3
11			NLA - Spacer (1/4 x 3/8 x 3/16")	1	3
12			Half Clamp, Non-Threaded Holes	1	1
13			NLA - Half Clamp, Threaded Holes	1	1
14			Plate, Stud, Quad Link For 1556 Heavy Duty Joystick	1	1
15			Screw, Phillips Flat Head (#10-32 x 1-1/8")	1	2
2		1114863-NLA	NLA - Ball Plunger Assembly with Lock Washer	2	1

NOTE:
A - Includes the Quad Link, items 2-8, 10-13 and used with an SPJ-80 and DPJ joystick
B - Includes the Quad Link, items 2-6, 9-13 and used with a MPJ joystick
C - includes the Quad Link, items 2-5, 10-15 and used with a 1556 Heavy Duty joystick
D - Quad Link Assembly is no longer available. Please see Quad Link Assembly (After 10/30/05) category and use new Quad LInk design as a replacement.

Quad Link For MK5 SPJ-80 and DPJ Joystick
10/9/03 Thru 1/12/04

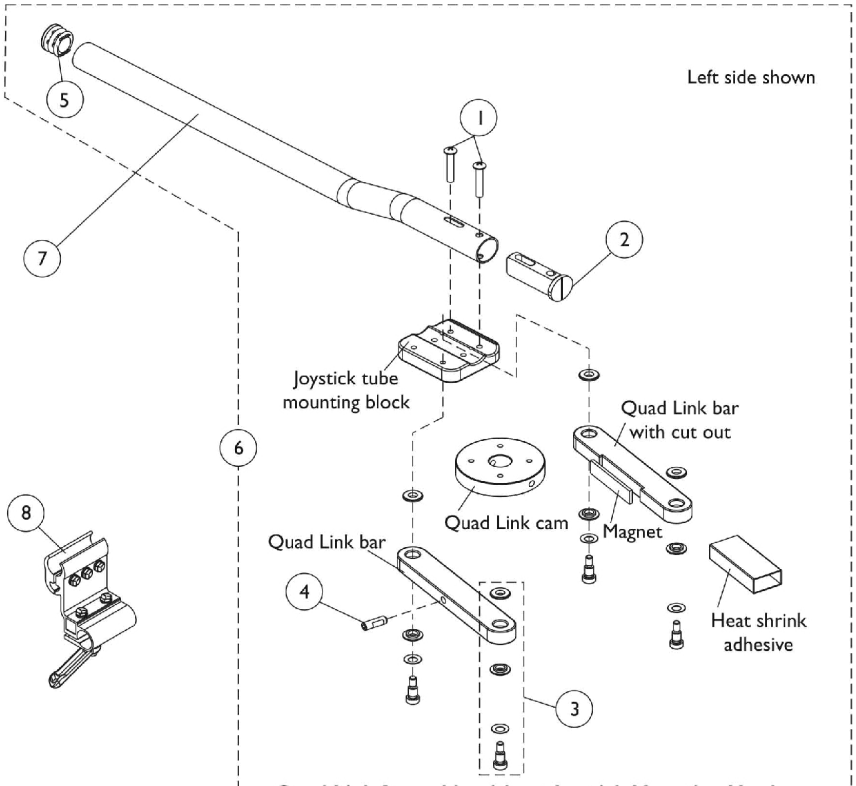

Quad Link Assembly without Joystick Mounting Hardware
NOTE: For Quad Link components not numbered, refer to item 6

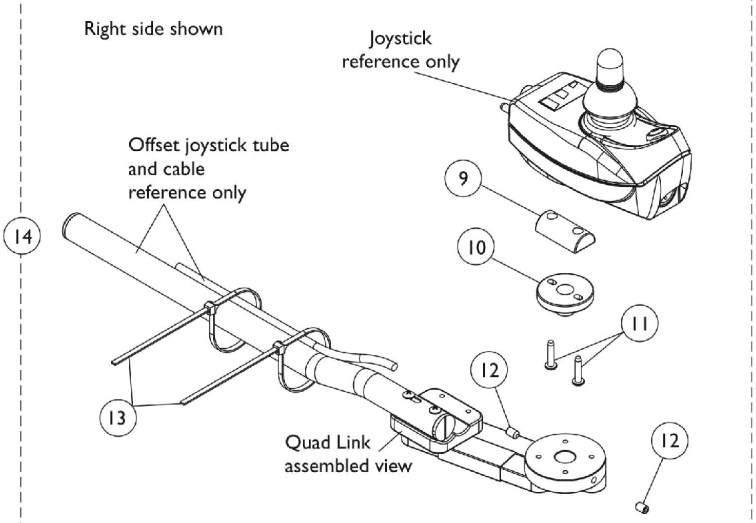

Quad Link Joystick Mounting Hardware

Quad Link For MK5 SPJ-80 and DPJ Joystick

10/9/03 Thru 1/12/04

Item Number	Note	Part Number	Description	Quantity Per Package	Quantity Per Assembly
1		1025714	Screw, Phillips Pan Head (#10-32 x 1-1/8")	1	2
2		1093063	Spacer, Joystick Tube, Black	1	1
3		1123005-NLA	NLA - Quad Link Hardware Consists Of: 4 each Screw, Socket Head Shoulder (1/4 x 1/4") 4 each Washer, Spring (1/4 x 1/2 x 1/32") 8 each Spacer, Flanged (1/4 x 9/16 x 1/8")	1	1
4		1123010-NLA	NLA - Screw, Socket Head Set w/ Patch (1/4-20 x 3/4")	1	1
5		1027095	Plug Button, Black (7/8")	1	1
6	C,A	1121120-NLA	NLA - Quad Link Assembly - Right	1	1
6	C,A	1123004-NLA	NLA - Quad Link Assembly - Left	1	1
7		1093506-NLA	NLA - Tube, Joystick Offset (1/2")	1	1
8		1093071	Clamp, Fixed Height Joystick Tube	1	1
9		1121100-NLA	NLA - Mount, Joystick Quad Link	1	1
10		1121101-NLA	NLA - Mount, Joystick Spin	1	1
11		1102546-NLA	NLA - Screw, Phillips Pan Head (#10-32 x 7/8")	1	2
12		1123010-NLA	NLA - Screw, Socket Head Set w/ Patch (1/4-20 x 3/4")	1	2
13		1095502-NLA	NLA - Package, Tie Wrap (11-1/2" L)	10	2
14	B,C	1121113-NLA	NLA - Quad Link Joystick Mounting Hardware	1	1

NOTE: A - Includes items 1-5. When ordering a Quad Link Assembly for the first time, item 14 must be ordered as well. When replacing an existing Quad Link made before 10/9/03, items 6, 7, 8 and 14 must be ordered.
B - Includes items 9-13 and used for MK5 SPJ-80 and DPJ joystick.
C - No Longer Available, see Quad Link dated after 1/12/04

Quad Link For MK5 MPJ Joystick
10/9/03 Thru 1/12/04

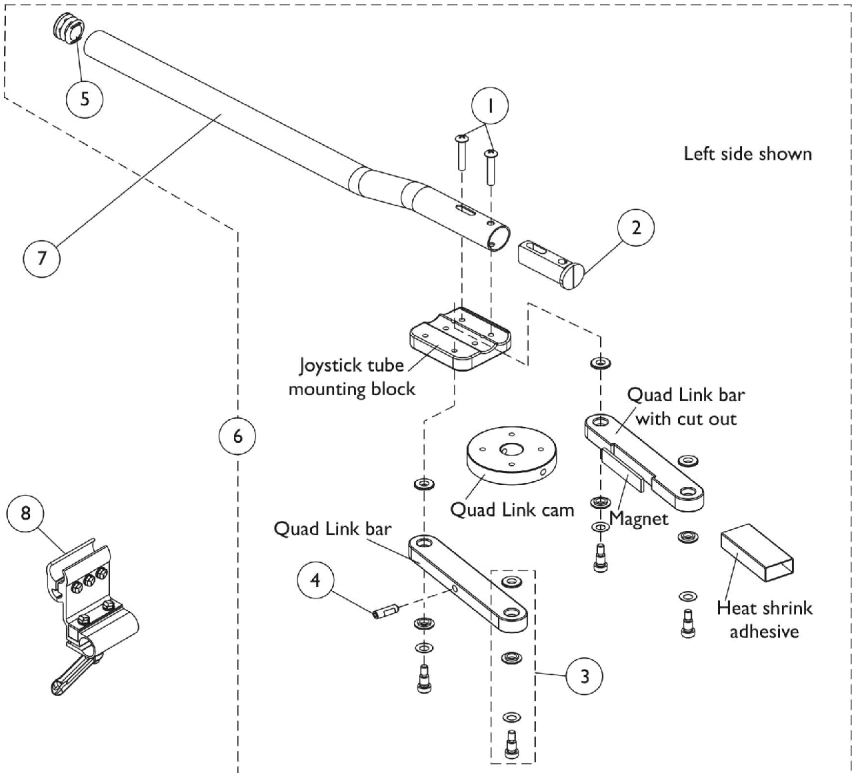

Quad Link Assembly without Joystick Mounting Hardware
NOTE: For Quad Link components not numbered, refer to item 6

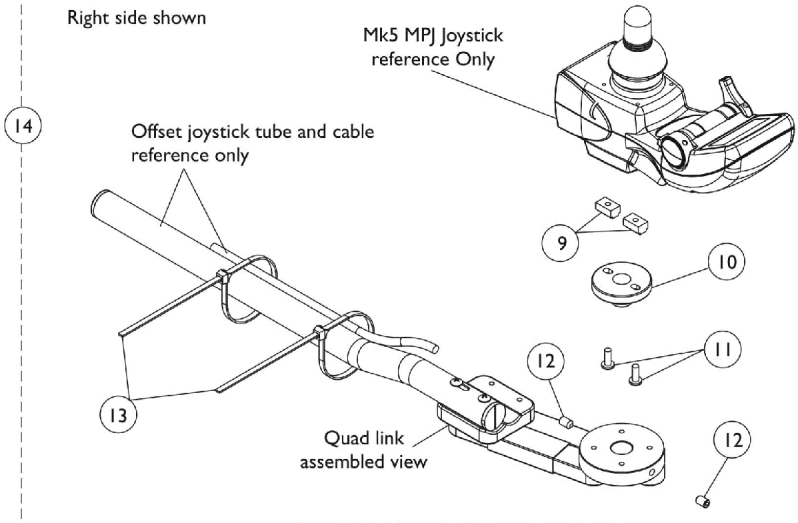

Quad Link Joystick Mounting Hardware

Quad Link For MK5 MPJ Joystick

10/9/03 Thru 1/12/04

Item Number	Note	Part Number	Description	Quantity Per Package	Quantity Per Assembly
1		1025714	Screw, Phillips Pan Head (#10-32 x 1-1/8")	1	2
2		1093063	Spacer, Joystick Tube, Black	1	1
3		1123005-NLA	NLA - Quad Link Hardware Consists Of: 4 each Screw, Socket Head Shoulder (1/4 x 1/4") 4 each Washer, Spring (1/4 x 1/2 x 1/32") 8 each Spacer, Flanged (1/4 x 9/16 x 1/8")	1	1
4		1123010-NLA	NLA - Screw, Socket Head Set w/ Patch (1/4-20 x 3/4")	1	1
5		1027095	Plug Button, Black (7/8")	1	1
6	A,C	1121120-NLA	NLA - Quad Link Assembly - Right	1	1
6	A,C	1123004-NLA	NLA - Quad Link Assembly - Left	1	1
7		1093506-NLA	NLA - Tube, Joystick Offset (1/2")	1	1
8		1093071	Clamp, Fixed Height Joystick Tube	1	1
9		1117216-NLA	NLA - T-Nut (#10-32)	1	2
10		1121101-NLA	NLA - Mount, Joystick Spin	1	1
11		1134086-NLA	NLA - Screw, Socket Button Head w/ Patch (#10-32 x 1/2")	1	2
12		1123010-NLA	NLA - Screw, Socket Head Set w/ Patch (1/4-20 x 3/4")	1	2
13		1095502-NLA	NLA - Package, Tie Wrap (11-1/2" L)	10	2
14	B,C	1121114-NLA	NLA - Quad Link Joystick Mounting Hardware	1	1

NOTE: A - Includes items 1-5. When ordering a Quad Link Assembly for the first time, item 14 must be ordered as well. When replacing an existing Quad Link made before 10/9/03, items 6, 7, 8 and 14 must be ordered.
B - Includes items 9-13 and used for MK5 MPJ joystick.
C - No Longer Available, see Quad Link dated after 1/12/04

Quad Link For 1556 Heavy Duty Joystick
10/9/03 Thru 1/12/04

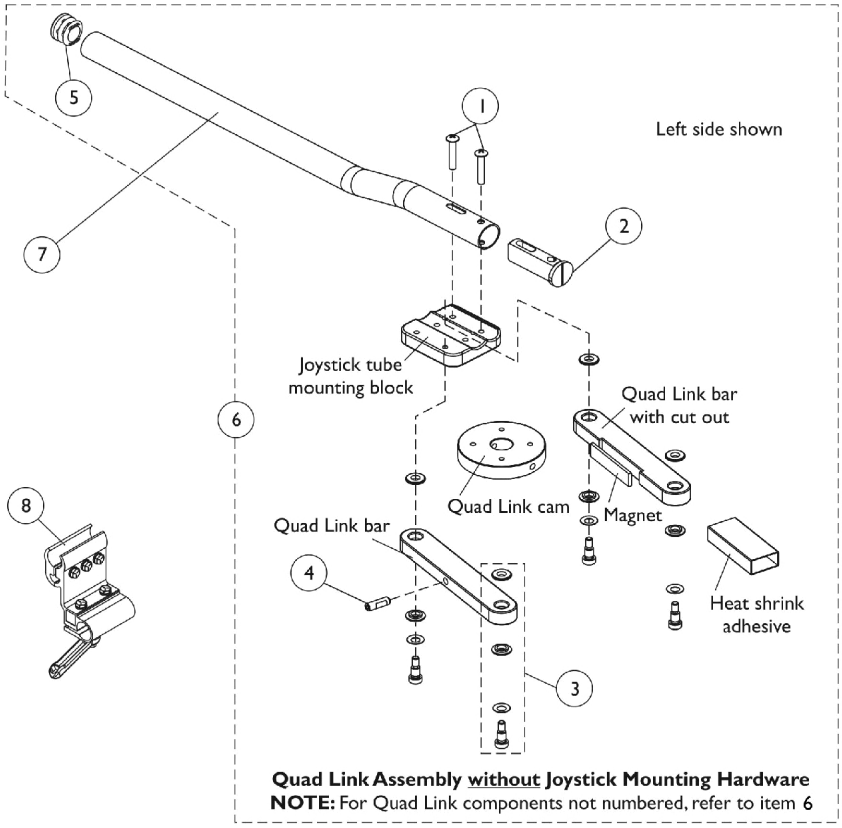

Quad Link Assembly without Joystick Mounting Hardware
NOTE: For Quad Link components not numbered, refer to item 6

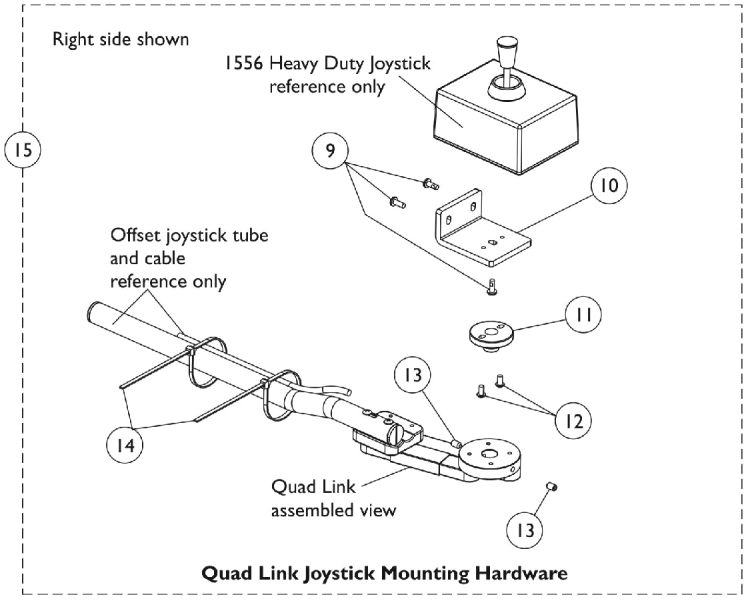

Quad Link Joystick Mounting Hardware

Quad Link For 1556 Heavy Duty Joystick

10/9/03 Thru 1/12/04

Item Number	Note	Part Number	Description	Quantity Per Package	Quantity Per Assembly
1		1025714	Screw, Phillips Pan Head (#10-32 x 1-1/8")	1	2
2		1093063	Spacer, Joystick Tube, Black	1	1
3		1123005-NLA	NLA - Quad Link Hardware Consists Of: 4 each Screw, Socket Head Shoulder (1/4 x 1/4") 4 each Washer, Spring (1/4 x 1/2 x 1/32") 8 each Spacer, Flanged (1/4 x 9/16 x 1/8")	1	1
4		1123010-NLA	NLA - Screw, Socket Head Set w/ Patch (1/4-20 x 3/4")	1	1
5		1027095	Plug Button, Black (7/8")	1	1
6	A,C	1121120-NLA	NLA - Quad Link Assembly - Right	1	1
6	A,C	1123004-NLA	NLA - Quad Link Assembly - Left	1	1
7		1093506-NLA	NLA - Tube, Joystick Offset (1/2")	1	1
8		1093071	Clamp, Fixed Height Joystick Tube	1	1
9		1134086-NLA	NLA - Screw, Socket Button Head w/ Patch (#10-32 x 1/2")	1	3
10		1121111-NLA	NLA - Plate, 1556 Heavy Duty Joystick Quad Link	1	1
11		1121101-NLA	NLA - Mount, Joystick Spin	1	1
12		1016401-NLA	NLA - Screw, Phillips Round Head (#10-32 x 3/8")	1	2
13		1123010-NLA	NLA - Screw, Socket Head Set w/ Patch (1/4-20 x 3/4")	1	2
14		1095502-NLA	NLA - Package, Tie Wrap (11-1/2" L)	10	2
15	B,C	1121115-NLA	NLA - Quad Link Joystick Mounting Hardware	1	1

NOTE: A - Includes items 1-5. When ordering a Quad Link Assembly for the first time, item 15 must be ordered as well. When replacing an existing Quad Link made before 10/9/03, items 6, 7, 8 and 15 must be ordered.
B - Includes items 9-14 and used for 1556 Heavy Duty Joystick.
C - No Longer Available, see Quad Link dated after 1/12/04

Quad Link
1/13/04 Thru 10/30/05

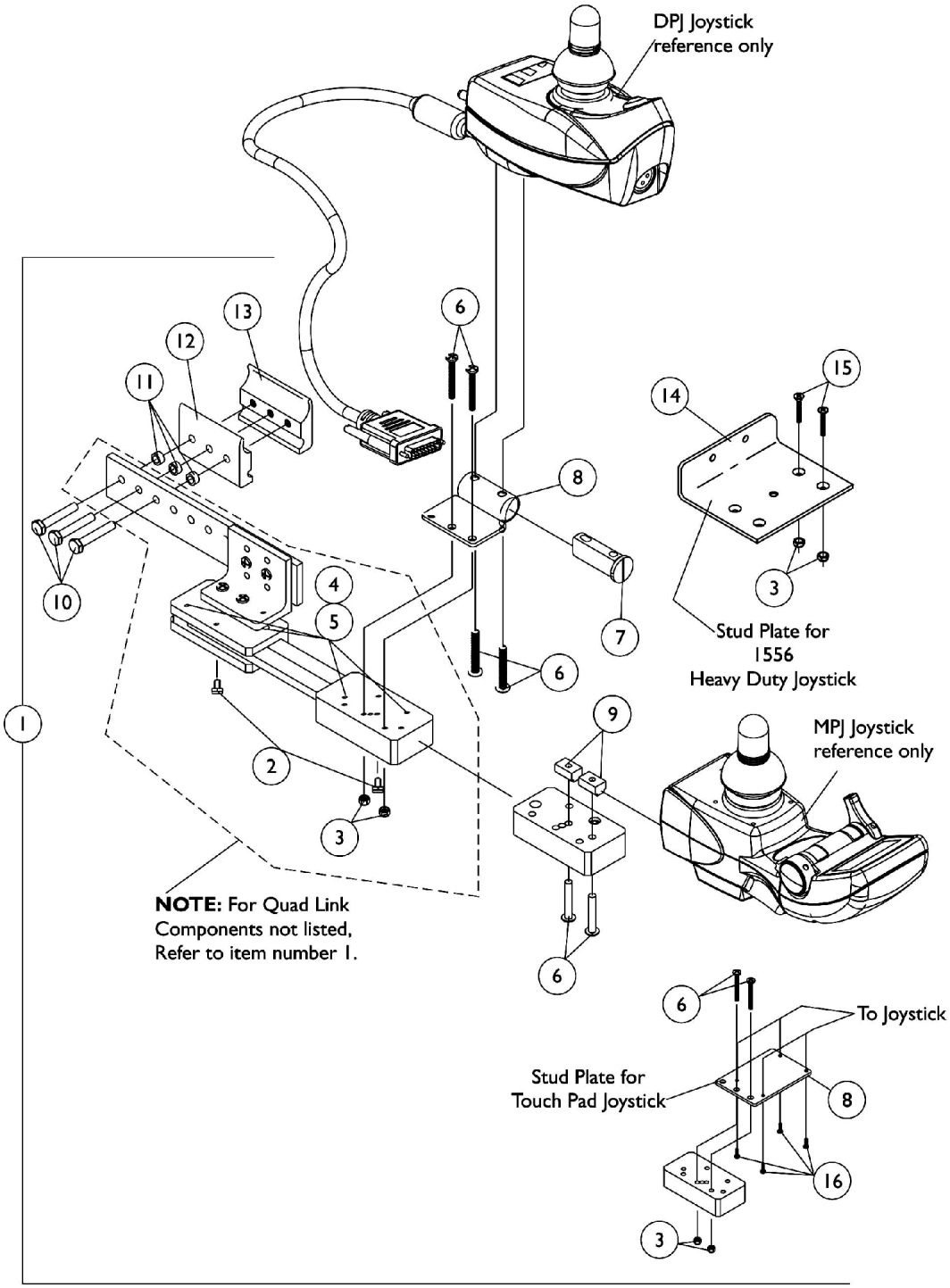

Quad Link
1/13/04 Thru 10/30/05

Item Number	Note	Part Number	Description	Quantity Per Package	Quantity Per Assembly
1	A	1052402-NLA	NLA - Kit, Quad Link Assembly - Right	1	1
2			NLA - Ball Plunger Assembly with Lock Washer	2	1
3			Locknut (#10-32)	1	2
4			NLA - Screw, Cap, Socket Head (#10-32 x 1/2")	1	4
5			NLA - Bushing, Bronze (3/16 x 1/4 x 1/4")	1	4
6			Screw, Phillips Pan Head (#10-32 x 1-1/8")	1	4
7			Spacer, Joystick Tube, Black	1	1
8			NLA - Stud Plate, Quad Link	1	1
10			Screw, Hex Head (1/4-20 x 1-1/2")	1	3
11			NLA - Spacer (1/4 x 3/8 x 3/16")	1	3
12			Half Clamp, Non-Threaded Holes	1	1
13			NLA - Half Clamp, Threaded Holes	1	1
1	A	1115372-NLA	NLA - Kit, Quad Link Assembly - Left	1	1
2			NLA - Ball Plunger Assembly with Lock Washer	2	1
3			Locknut (#10-32)	1	2
4			NLA - Screw, Cap, Socket Head (#10-32 x 1/2")	1	4
5			NLA - Bushing, Bronze (3/16 x 1/4 x 1/4")	1	4
6			Screw, Phillips Pan Head (#10-32 x 1-1/8")	1	4
7			Spacer, Joystick Tube, Black	1	1
8			NLA - Stud Plate, Quad Link	1	1
10			Screw, Hex Head (1/4-20 x 1-1/2")	1	3
11			NLA - Spacer (1/4 x 3/8 x 3/16")	1	3
12			Half Clamp, Non-Threaded Holes	1	1
13			NLA - Half Clamp, Threaded Holes	1	1
1	B	1117278-NLA	NLA - Kit, Quad Link Assembly - Right	1	1
2			NLA - Ball Plunger Assembly with Lock Washer	2	1
3			Locknut (#10-32)	1	2
4			NLA - Screw, Cap, Socket Head (#10-32 x 1/2")	1	4
5			NLA - Bushing, Bronze (3/16 x 1/4 x 1/4")	1	4
6			Screw, Phillips Pan Head (#10-32 x 1-1/8")	1	2
9			NLA - T-Nut (#10-32)	1	2
10			Screw, Hex Head (1/4-20 x 1-1/2")	1	3
11			NLA - Spacer (1/4 x 3/8 x 3/16")	1	3
12			Half Clamp, Non-Threaded Holes	1	1
13			NLA - Half Clamp, Threaded Holes	1	1
1	B	1117239-NLA	NLA - Kit, Quad Link Assembly - Left	1	1
2			NLA - Ball Plunger Assembly with Lock Washer	2	1
3			Locknut (#10-32)	1	2
4			NLA - Screw, Cap, Socket Head (#10-32 x 1/2")	1	4
5			NLA - Bushing, Bronze (3/16 x 1/4 x 1/4")	1	4
6			Screw, Phillips Pan Head (#10-32 x 1-1/8")	1	2
9			NLA - T-Nut (#10-32)	1	2
10			Screw, Hex Head (1/4-20 x 1-1/2")	1	3

Quad Link
1/13/04 Thru 10/30/05

Item Number	Note	Part Number	Description	Quantity Per Package	Quantity Per Assembly
11			NLA - Spacer (1/4 x 3/8 x 3/16")	1	3
12			Half Clamp, Non-Threaded Holes	1	1
13			NLA - Half Clamp, Threaded Holes	1	1
1	C,E	1034703-NLA	NLA - Kit, Quad Link Assembly - Right	1	1
2			NLA - Ball Plunger Assembly with Lock Washer	2	1
3			Locknut (#10-32)	1	2
4			NLA - Screw, Cap, Socket Head (#10-32 x 1/2")	1	4
5			NLA - Bushing, Bronze (3/16 x 1/4 x 1/4")	1	4
10			Screw, Hex Head (1/4-20 x 1-1/2")	1	3
11			NLA - Spacer (1/4 x 3/8 x 3/16")	1	3
12			Half Clamp, Non-Threaded Holes	1	1
13			NLA - Half Clamp, Threaded Holes	1	1
14			Plate, Stud, Quad Link For 1556 Heavy Duty Joystick	1	1
15			Screw, Phillips Flat Head (#10-32 x 1-1/8")	1	2
1	C	1114866-NLA	NLA - Kit, Quad Link Assembly - Left	1	1
2			NLA - Ball Plunger Assembly with Lock Washer	2	1
3			Locknut (#10-32)	1	2
4			NLA - Screw, Cap, Socket Head (#10-32 x 1/2")	1	4
5			NLA - Bushing, Bronze (3/16 x 1/4 x 1/4")	1	4
10			Screw, Hex Head (1/4-20 x 1-1/2")	1	3
11			NLA - Spacer (1/4 x 3/8 x 3/16")	1	3
12			Half Clamp, Non-Threaded Holes	1	1
13			NLA - Half Clamp, Threaded Holes	1	1
14			Plate, Stud, Quad Link For 1556 Heavy Duty Joystick	1	1
15			Screw, Phillips Flat Head (#10-32 x 1-1/8")	1	2
1	D	1102027-NLA	NLA - Kit, Quad Link Assembly - Right For TCHJOY/TCPDM4 Touchpad	1	1
2			NLA - Ball Plunger Assembly with Lock Washer	2	1
3			Locknut (#10-32)	1	2
4			NLA - Screw, Cap, Socket Head (#10-32 x 1/2")	1	4
5			NLA - Bushing, Bronze (3/16 x 1/4 x 1/4")	1	4
6			Screw, Phillips Pan Head (#10-32 x 1-1/8")	1	2
8			NLA - Plate, Stud, Quad Link MKIV TCHJOY/TCPDM4	1	1
10			Screw, Hex Head (1/4-20 x 1-1/2")	1	3
11			NLA - Spacer (1/4 x 3/8 x 3/16")	1	3
12			Half Clamp, Non-Threaded Holes	1	1
13			NLA - Half Clamp, Threaded Holes	1	1
16			NLA - Screw, Phillips Flat Head Countersunk (#4-40 x 3/8")	1	4
2		1114863-NLA	NLA - Ball Plunger Assembly with Lock Washer	2	1

Quad Link

1/13/04 Thru 10/30/05

NOTE:
A - Includes the Quad Link, items 2-8, 10-13 and used with an SPJ-80 and DPJ joystick
B - Includes the Quad Link, items 2-6, 9-13 and used with a MPJ joystick
C - Includes the Quad Link, items 2-5, 10-15 and used with a 1556 Heavy Duty joystick
D - Includes the Quad Link, items 2-6, 8, 10-12 and 16. Used with a Touch Pad joystick. Left side mounted Quad Link must be requested as a "special" order
E - Quad Link Assembly is no longer available. Please see Quad Link Assembly (After 10/30/05) category and use new Quad LInk design as a replacement.

Quad Link (QLA)

After 10/30/05

When converting an old style Quad Link that attaches to a mounting plate or (a Flex Tube or Touch Pad Joystick Tube) is currently on the chair then order the following:
Quad Link Mtg. Hdwr. (item 4), Quad Link (item 1) & Ht. Adj. Joystick Tube Clamp (item 11)
NOTE: Substitute (item 4) with 2 ea. of the PPH Screws (item 5) when an offset joystick tube is currently on the chair. Additional Joystick Mtg. Hdwr. must be ordered when a 1556 Heavy Duty, TCPD Touch Pad or MPJ joystick are used.

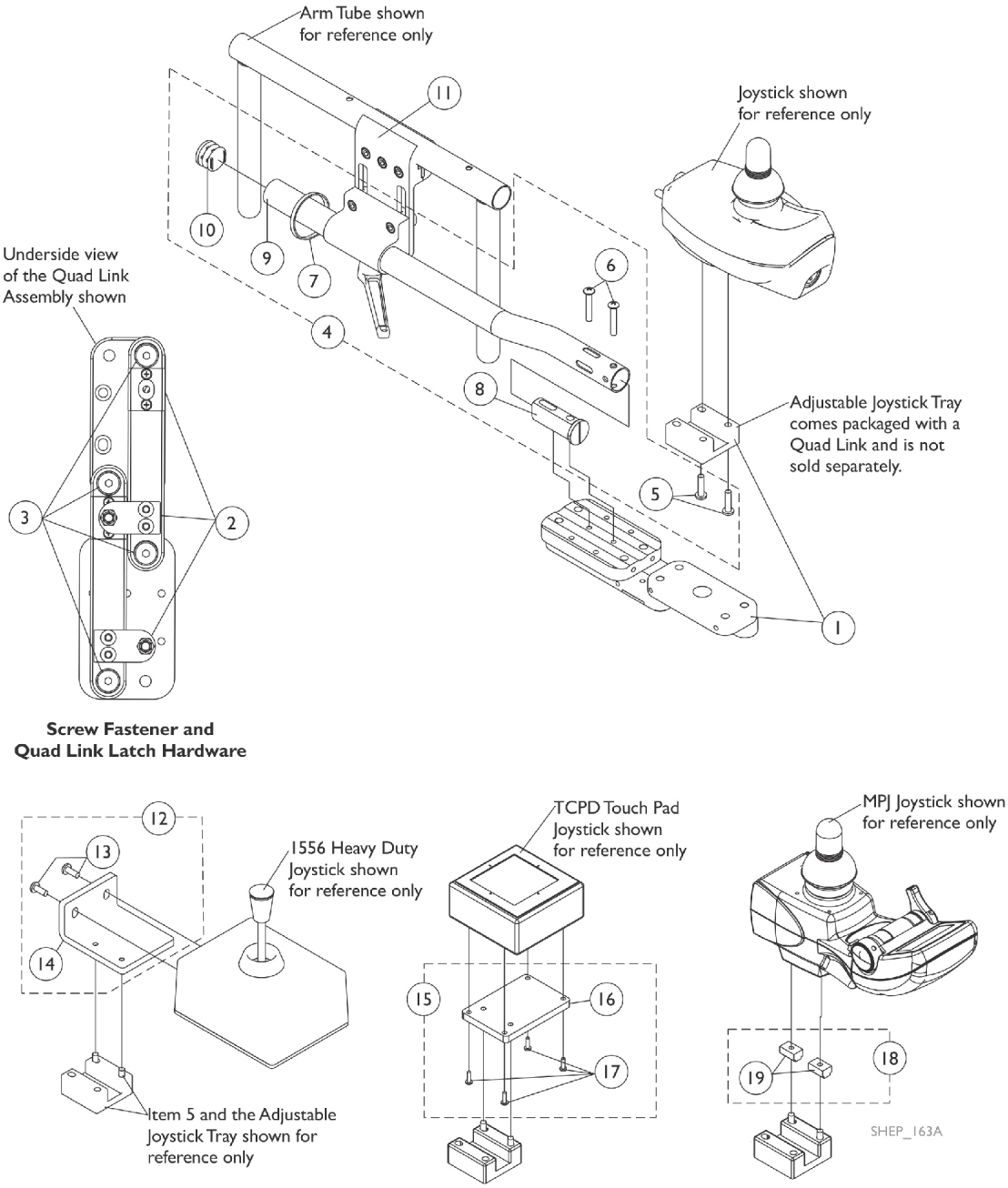

Quad Link (QLA)

After 10/30/05

When converting an old style Quad Link that attaches to a mounting plate or (a Flex Tube or Touch Pad Joystick Tube) is currently on the chair then order the following:
Quad Link Mtg. Hdwr. (item 4), Quad Link (item 1) & Ht. Adj. Joystick Tube Clamp (item 11)
NOTE: Substitute (item 4) with 2 ea. of the PPH Screws (item 5) when an offset joystick tube is currently on the chair. Additional Joystick Mtg. Hdwr. must be ordered when a 1556 Heavy Duty, TCPD Touch Pad or MPJ joystick are used.

Item Number	Note	Part Number	Description	Quantity Per	
				Package	Assembly
1	G	1140896	Quad Link w/ Adjustable Joystick Tray (QLA) and Instruction Sheet - Right	1	1
1	G	1140897	Quad Link w/ Adjustable Joystick Tray (QLA) and Instruction Sheet - Left	1	1
2	A	1140425	Kit, Quad Link Latch Hardware	1	1
3	B	1140424-NLA	NLA - Kit, Quad Link Screw Fastener Hardware	1	1
4	C,C1	1139416	Kit, ASBA/ADJASBA Quad Link Mounting Hardware	1	1
5			Screw, Phillips Pan Head w/ Patch (#10-32 x 3/4")	1	2
6			Screw, Phillips Pan Head (#10-32 x 1-1/8")	1	2
7			Tie Wrap (11-1/2" L)	1	1
8			Spacer, Joystick Tube, Black	1	1
9			Tube, Joystick Offset (1/2")	1	1
10			Plug Button, Black (7/8")	1	1
5		1105414	Screw, Phillips Pan Head w/ Patch (#10-32 x 3/4")	1	2
11		1139422	Clamp, Height Adjustable Joystick Tube (ARM250)	1	1
12	D	1139925-NLA	NLA - Kit, 1556 Heavy Duty Joystick To Quad Link Mounting Hardware	1	1
13			Screw, Phillips Pan Head (#10-32 x 1/2")	1	2
14			NLA - Plate, 1556 HD Joystick Quad Link	1	1
15	E	1139683-NLA	NLA - Kit, TCPD Touch Pad To Quad Link Mounting Hardware	1	1
16			Plate, TCPD Touch Pad Quad Link	1	1
17			Screw, Phillips Pan Head (#4-40 x 3/8")	1	4
18	F	1139682-NLA	NLA - Kit, MPJ Joystick To Quad Link Mounting Hardware	1	1
19			NLA - T-Nut (#10-32)	1	2
	H	1134844	Instruction Sheet, Quad Link	1	1

NOTE:
A - Latch Kit includes 4 ea. Button Head Cap Screws (10-32 x 3/8"), 2 ea. Latch Spring Assembly, 4 ea. Phillips Flat C'Sunk Head Screws, 2 ea. Spring Catch Plates, 2 ea. Socket Head Set Screws (10-32 x 3/8")
B - Screw Fastener Kit includes 4 ea. Socket Head Shoulder Screws (3/8 x 3/8"), 2 ea. Socket Head Cap Screws (1/4-20 x 3/8"), 2 ea. Socket Head Set Screws (1/4-20 x 1/2"), 4 ea. Socket Head Set Screws (10-32 x 1/8")
C - Includes items 5-10. The Quad Link Mounting Hardware accommodates MK5 SPJ-80, DPJ, MPJ, and PSF/PSR joysticks.
C1 - When ordering the Quad Link for the first time, Additional hardware is required for 1556 Heavy Duty, TCPD Touch Pad joysticks and (MPJ joysticks if the T-nuts are missing). See pictorial for reference.
D - Includes items 13 and 14
E - Includes items 16 and 17
F - Includes 2 ea. of item 19
G - The 4-Way Switch Mounting Plate has changed and may be required when converting a Quad Link assembled to a mounting plate over to a Quad Link introduced after 10/30/05
H - Not Shown

R.I.M. Head Control Assembly
(1500)

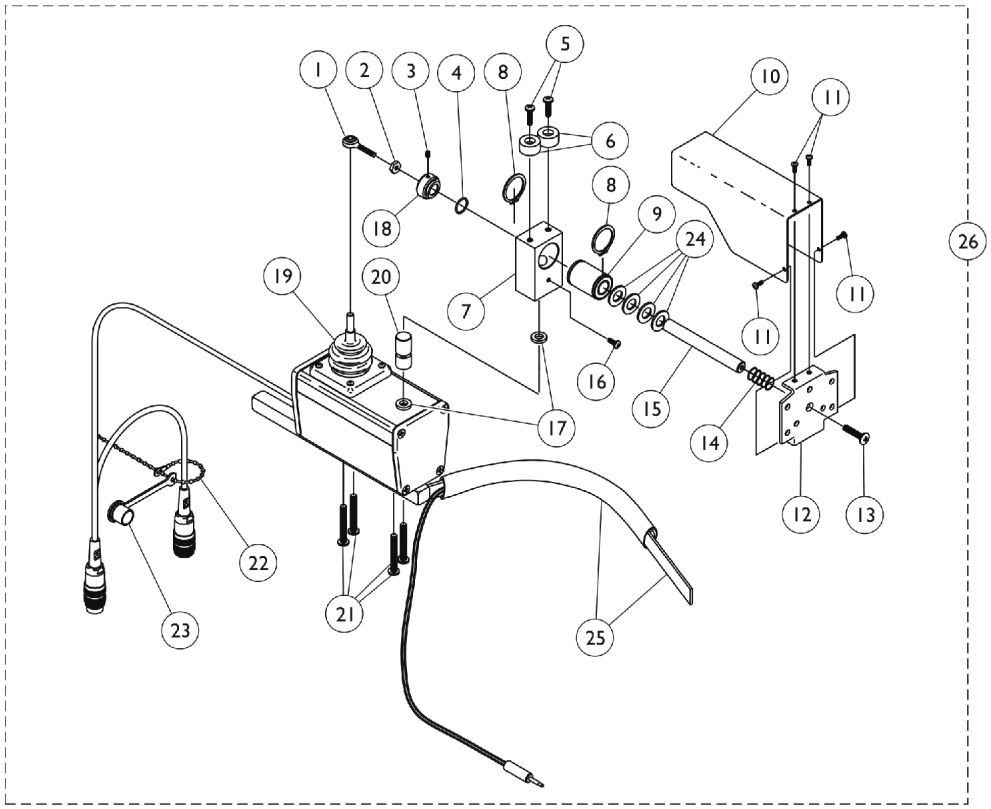

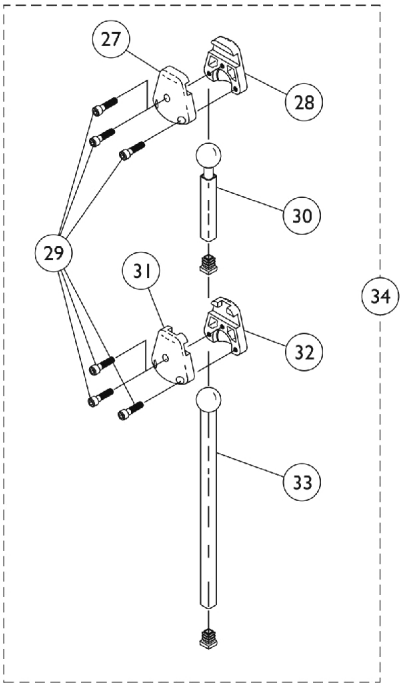

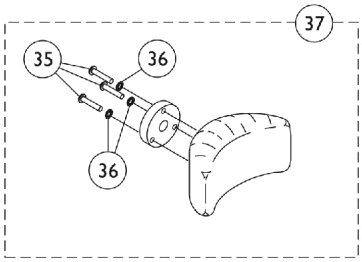

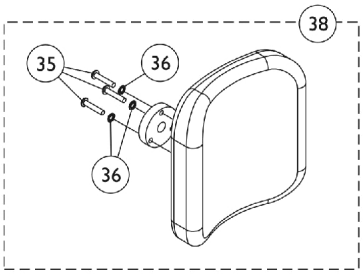

R.I.M. Head Control Assembly
(1500)

Item Number	Note	Part Number	Description	Quantity Per Package	Quantity Per Assembly
1		1001625	Tie Rod End	1	1
2		48095X000-NLA	NLA - Locknut (#10-32)	1	1
3		1025275-NLA	NLA - Screw, Set w/ Patch (#8-32 x 1/4")	1	1
4		2001139	O-Ring (1/2" I.D.)	1	1
5		1028529	Screw, Phillips Pan Head (#8-32 x 3/8")	1	2
6		1055002-NLA	NLA - Washer, Nylon	1	2
7		1056206	Block, Pivot	1	1
8		1054939-NLA	NLA - Ring, Snap	1	2
9		1018113	Bearing, Linear	1	1
10		1055014-NLA	NLA - Shield, Push Rod	1	1
11		1021742	Screw, Phillips Pan Head (#4-40 x 1/2")	1	4
12		1055031-NLA	NLA - Bracket, Headrest Mounting, Black	1	1
13		40127X002-NLA	NLA - Screw, Phillips Oval Head (#10-32 x 3/4")	1	1
14		1055145-NLA	NLA - Spring, Compression (19/32 x 1-1/4 x 1/32")	1	1
15		1055016-NLA	NLA - Rod, Push	1	1
16		1026728-NLA	NLA - Screw, Phillips Pan Head (#6-32 x 1/4")	1	1
17		1010398	Washer, Nylon (1/4 x 1/2 x 1/16")	1	2
18		1025236-NLA	NLA - Collar, Shoulder	1	1
19		50000X364-NLA	NLA - Boot, Joystick	1	1
20		1055017-NLA	NLA - Rod, Pivot	1	1
21		11008X014-NLA	NLA - Screw, Phillips Round Head (#10-32 x 1")	1	4
22		1038256-NLA	NLA - Tie Wrap (4-1/4" L)	1	1
23		1037373-NLA	NLA - Cover, Splash	1	1
24		1003766-NLA	NLA - Washer, Plain (1/2 x 1 x 1/8")	1	4
25		1025271-NLA	NLA - Ribbon Reset Switch and Bracket Assembly	1	1
26	A	1056210E-NLA	NLA - Reconditioned - Joystick, Remote Head	1	1
27		1055023-NLA	NLA - Clamp, Horizontal Pivot	1	1
28		1055024-NLA	NLA - Clamp, Threaded, Horizontal Pivot	1	1
29		1055144-NLA	NLA - Screw, Socket Head (M6 x 1 x 25mm)	1	6
30		1055028	Tube, Slide, Square, Short	1	1
31		1055025-NLA	NLA - Clamp, Vertical Pivot	1	1
32		1055026-NLA	NLA - Clamp, Threaded, Vertical Pivot	1	1
33		1055027-NLA	NLA - Tube, Slide, Square, Long	1	1
34	B	1056213-NLA	NLA - Hardware, Adjustment	1	1
35		1005383	Screw, Socket Button Head (#10-32 x 1")	1	3
36		1027263-NLA	NLA - Washer, Lock Internal Tooth (#10)	1	3
37	C	1056211-NLA	NLA - Kit, Headrest with Hardware, Otto Bock, Small	1	1
38	D	1056212	Kit, Headrest with Hardware, Large	1	1
	E	1056087-NLA	NLA - Screw, Socket Head (#10-32 x 1/2")	1	4

R.I.M. Head Control Assembly
(1500)

NOTE:
A - Includes items 1-25.
B - Includes items 27-33 and the Plug Buttons that attach to item 30 and 33 Slide Tubes. The Plug Buttons are not saleable.
C - Includes the Headrest Adapter and items 35 and 36.
D - Includes the Headrest Adapter and items 35 and 36. The LaBac Headrest is no longer used as of 12/6/10 that was attached with Screw part # 1056087 (4 ea.). The screw is still available to order for existing LaBac Headrest in the field.
E - Used for existing LaBac Headrest in the field only.

R.I.M. Head Control Mounting Hardware
(1500)

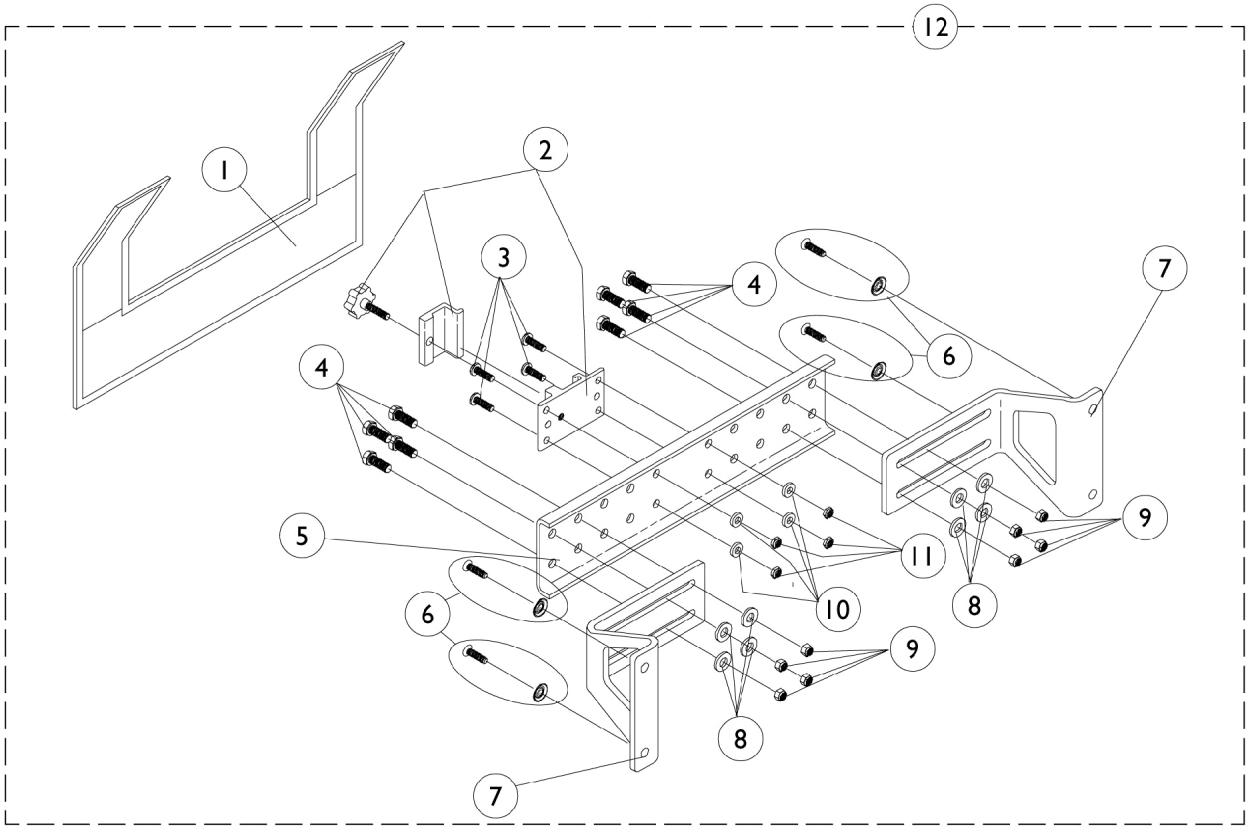

R.I.M. Head Control Mounting Hardware
(1500)

Item Number	Note	Part Number	Description	Quantity Per	
				Package	Assembly
1	B	1055149	Cover, Nylon	1	1
1	C	1055151-NLA	NLA - Cover, Nylon	1	1
2		1055148-NLA	NLA - Clamp with Knob, Two-Piece	1	1
3		1003645	Screw, Socket Button Head (#10-32 x 3/4")	1	4
4		7930326-NLA	NLA - Package, Screw, Hex Head (1/4-20 x 3/4")	25	8
5	B	1054931-NLA	NLA - Bracket, Attaching, Black (12 - 18" W)	1	1
5	C	1054933-NLA	NLA - Bracket, Attaching, Black (19 - 24" W)	1	1
6		1031095	Screws with Washers (#10-16 x 7/8")	4	1
6		1076284	Screw w/ Washer (#10 x 7/8")	1	4
7		1054929-NLA	NLA - Bracket, Wing, Black	1	2
8		1026907	Washer (1/4 x 1/2 x 1/16")	1	8
9		7930333	Locknut (1/4-20)	25	8
10		1026034-NLA	NLA - Washer, Nylon (3/16 x 7/16 x 1/8")	1	4
11		7930332-NLA	NLA - Locknut, High Profile (#10-32)	25	4
12	B,A	1056347	Hardware, Rim Control Mounting (RIMHW) (12-18" W)	1	1
12	C,A	1056348	Hardware, Rim Control Mounting (RIMHW) (19-24" W)	1	1

NOTE: A - Includes items 1-11
B - For 12-18" wide chairs
C - For 19-24" wide chairs

MK5 Display

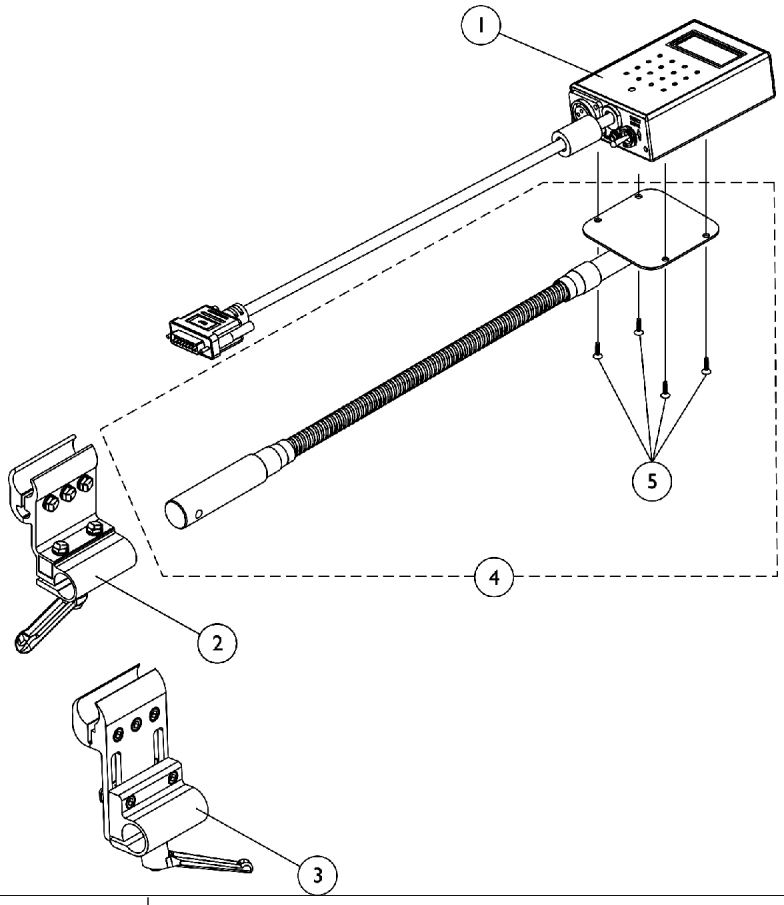

Item Number	Note	Part Number	Description	Quantity Per	
				Package	Assembly
1		1118759-NLA	NLA - Display, MK5 with Switches	1	1
2		1093071	Clamp, Fixed Height Joystick Tube	1	1
3	A	1139422	Clamp, Height Adjustable Joystick Tube (ARM250)	1	1
4		1049594-NLA	NLA - Tube, Flex with Screws	1	1
5		1052041	Screw, Phillips Pan Head (#4-40 x 3/8")	1	4

NOTE: A - Introduced 10/31/05 as option (ARM250) and can be used to replace a Fixed Height Joystick Clamp in the field

Sip-N-Puff / Digital Interface and AUX12 and AUX34

1554M4/1554M5

Sip-N-Puff/Digital Interface (1554M5) is required when using Proportional Attendant Control (PACM5)

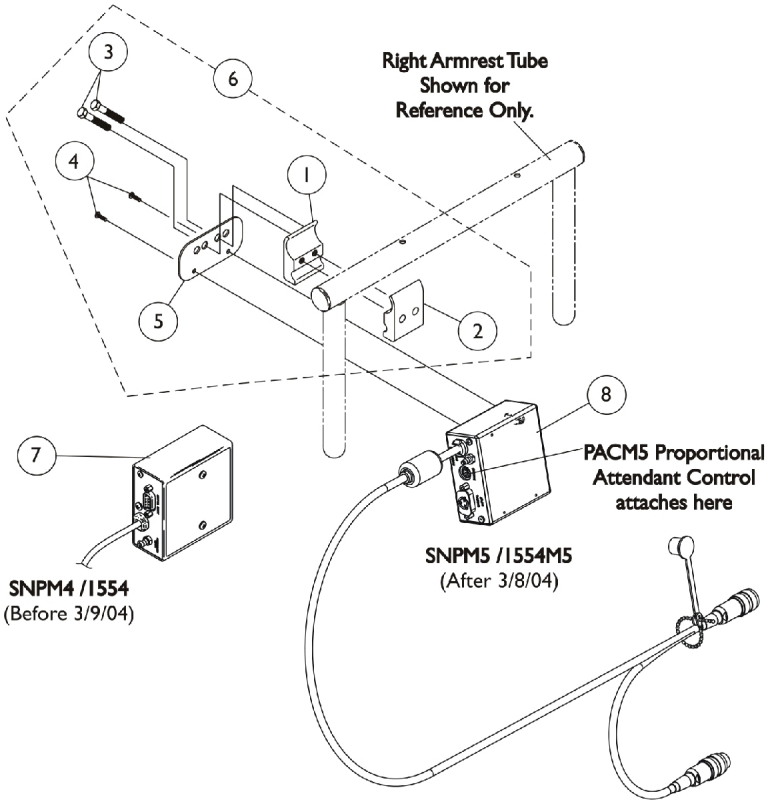

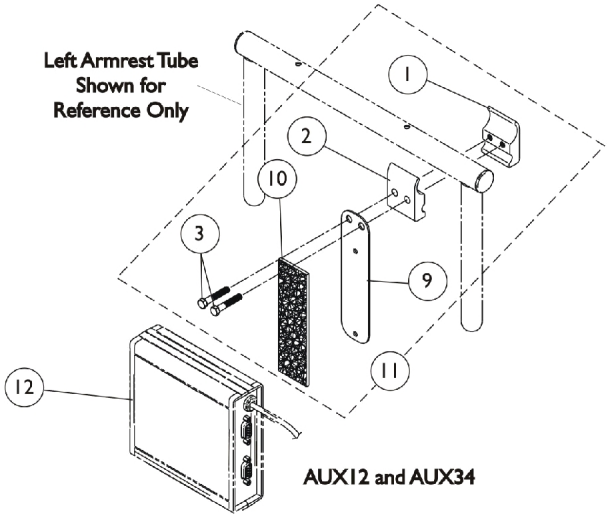

Sip-N-Puff / Digital Interface and AUX12 and AUX34

1554M4/1554M5

Sip-N-Puff/Digital Interface (1554M5) is required when using Proportional Attendant Control (PACM5)

Item Number	Note	Part Number	Description	Quantity Per	
				Package	Assembly
6	A,E	1049593	Kit, SNP/DI, MK5 SAC, 4WSB, S4WSB, GTAM, AUX12M6, AUX34M6 Mtg. Hdwr.	1	1
1			NLA - Half Clamp, Threaded Holes	1	1
2			Half Clamp, Non-Threaded Holes	1	1
3			NLA - Screw, Hex Head (1/4-20 x 1-1/8")	1	2
4			Screw, Phillips Pan Head (#4-40 x 3/8")	1	2
5			Plate, Mounting	1	1
7	B	1038635-NLA	NLA - Sip-N-Puff w/ Digital Interface	1	1
8	C	1122229-NLA	NLA - Sip-N-Puff w/ Digital Interface - MK5	1	1
11	D	1049592-NLA	NLA - Kit, COM12/AUX12 and COM34/AUX34 Mounting Hardware	1	1
1			NLA - Half Clamp, Threaded Holes	1	1
2			Half Clamp, Non-Threaded Holes	1	1
3			NLA - Screw, Hex Head (1/4-20 x 1-1/8")	1	2
9			NLA - Fastener, Dual Lock Hook and Loop Adhesive (2" W x 12" L)	1	1
10			NLA - Plate, COM12/AUX12 and COM34/AUX34 Mounting	1	1
12	F	See Note	See Footnote	1	1
12		1086241-NLA	NLA - Module, Communication, COM34/AUX34	1	1

NOTE:
A - Includes items 1-5
B - Before 3/9/04 - MKIV Electronics
C - After 3/8/04 - MK5 Electronics
D - Includes items 1-3, & 9-10. Item 9 that is packaged with the kit will only be a 4" long "loop" fastener.
E - As of 5/22/07 the Mounting Plate holes and the orientation of the Hardware was revised to attach the electronics closer to the chair. The Mounting Hardware Kit is backward compatible.
F - Part is no longer serviceable in the field.

Proportional Attendant Control Joystick PACM5

Sip-N-Puff/Digital Interface (1554M5) is required when using Proportional Attendant Control Joystick (PACM5)

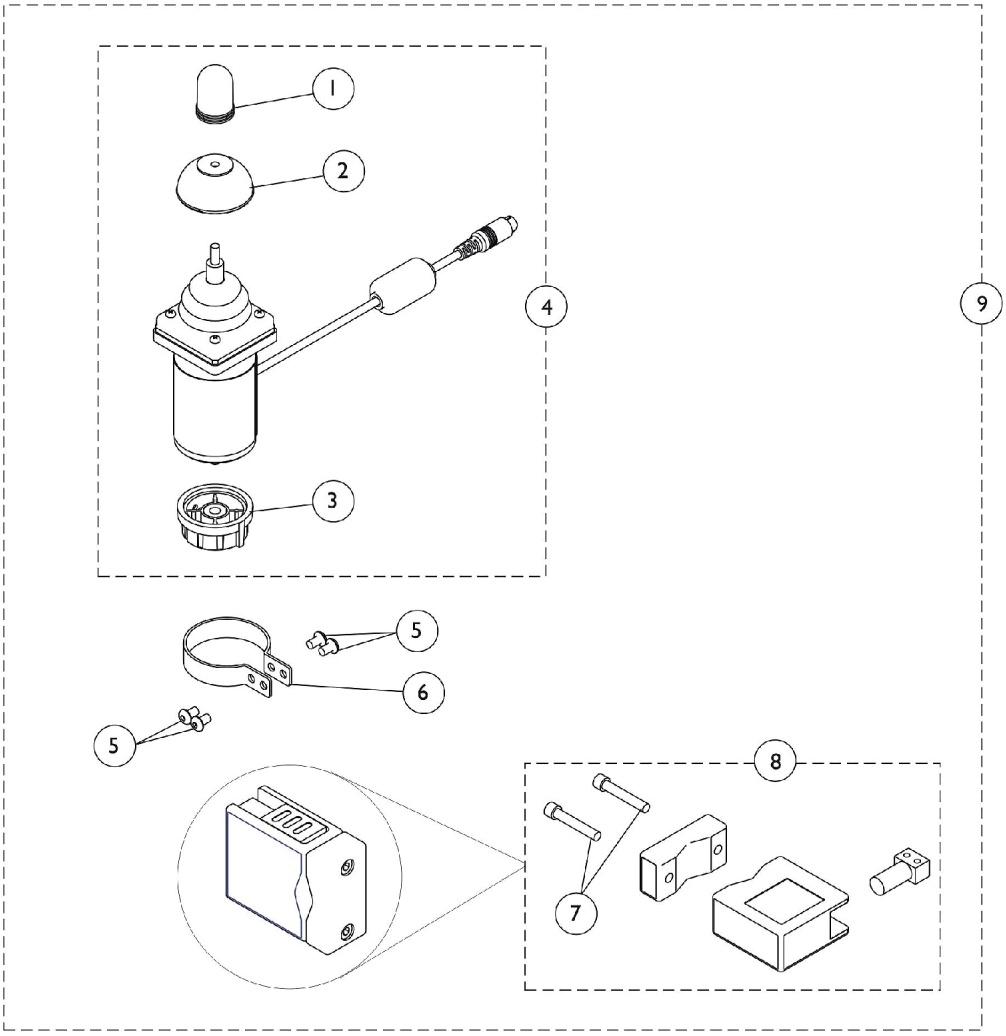

Proportional Attendant Control Joystick PACM5

Sip-N-Puff/Digital Interface (1554M5) is required when using Proportional Attendant Control Joystick (PACM5)

Item Number	Note	Part Number	Description	Quantity Per	
				Package	Assembly
1		1040217	Knob, Joystick Rubber, Black	1	1
2		1040218	Skirt, Joystick Rubber, Black	1	1
3		1114232	Knob, Control	1	1
4	A	1123230-NLA	NLA - Joystick, Proportional Attendant Control - MK5 (PACM5)	1	1
5		1021460	Screw, Socket Button Head (#10-32 x 5/16")	1	4
6		1025048	Clamp	1	1
7		0140406-NLA	NLA - Screw, Socket Head, Cap (5/16-18 x 1-1/2")	1	2
8		1123244	Bracket Assembly	1	1
9	B	1123274-NLA	NLA - Proportional Attendant Control Joystick w/ Bracket and Clamp -MK5 (PACM5)	1	1

NOTE: A - Includes Joystick plus items 1-3
B - Includes items 1-8

Joystick Options

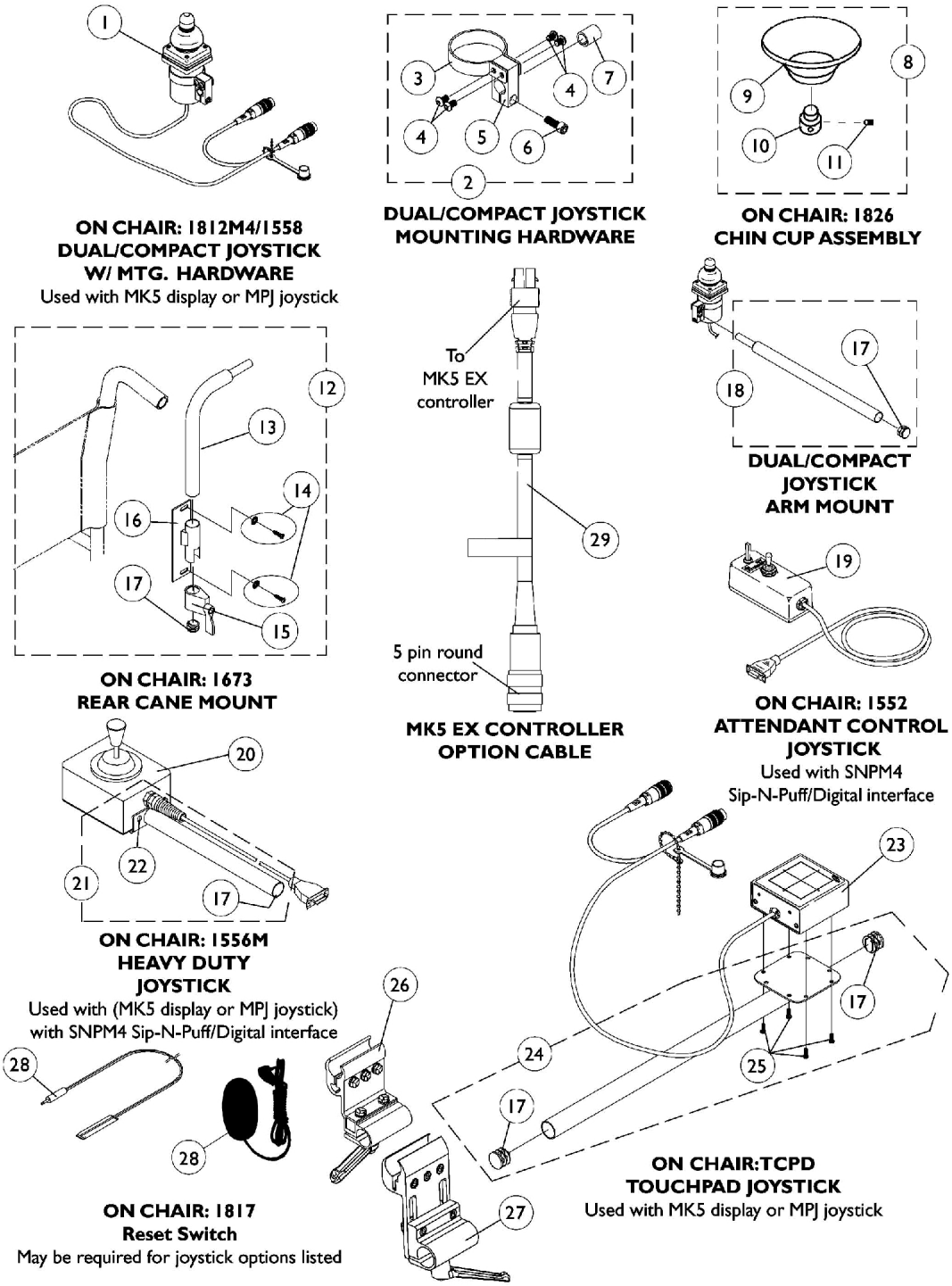

Joystick Options

Item Number	Note	Part Number	Description	Quantity Per Package	Quantity Per Assembly
1		1038638-NLA	NLA - Joystick, MKIV Dual/Compact	1	1
2	A	1108012	Hardware, Dual/Compact Joystick Clamp Mounting	1	1
3		1025048	Clamp	1	1
4		1021460	Screw, Socket Button Head (#10-32 x 5/16")	1	4
5		1025045-NLA	NLA - Clamp, Mounting	1	1
6		1027089-NLA	NLA - Screw, Socket Head (#10-24 x 1/2")	1	1
7		1026273-NLA	NLA - Spacer, Split (3/8" I.D.)	1	1
8	B	60102524	Kit, Chin Cup Assembly - 1826	1	1
9		1017545	Cup, Chin	1	1
10	L	1017612-NLA	NLA - Screw, Adaptor	1	1
11		90032X000	Screw, Set Socket Cup Point (#8-32 x 1/4")	1	1
12	C	1044917	Hardware, Rear Cane Mount (1673/RCM)	1	1
13		1044918-NLA	NLA - Tube, Joystick	1	1
14		1026298	Package, Screw with Washer (#10 x 7/8") (Pair)	1	2
15		1027274	Adjustment Lock Assemnbly, Black	1	1
16		1025245-NLA	NLA - Bracket, Upright, Black -Right	1	1
17		1027095	Plug Button, Black (7/8")	1	1
18	D	1052309	Tube, Arm Mount with Plug Button, Black	1	1
19		1025590	Joystick, Attendant Control (1552M)	1	1
20		1041544-NLA	NLA - Joystick, Heavy Duty	1	1
21	E	1052719-NLA	NLA - Kit, Straight Joystick Tube with Hardware	1	1
22		1016401-NLA	NLA - Screw, Phillips Round Head (#10-32 x 3/8")	1	3
23		1091353-NLA	NLA - Touchpad, Joystick Assembly	1	1
24	F	1092604-NLA	NLA - Kit, Straight Joystick Tube with Hardware	1	1
25		1052041	Screw, Phillips Pan Head (#4-40 x 3/8")	1	4
26	G	1093071	Clamp, Fixed Height Joystick Tube	1	1
27	K	1139422	Clamp, Height Adjustable Joystick Tube (ARM250)	1	1
28	I	1020818	Switch, Red Flex Ribbon (Tape) Reset	1	1
28	J	1123276	Kit, Switch, Black Egg Reset w/ Hook/Loop Adhesive Back Fastener & Attaching Screws (EGSBLK)	1	1
29	H	1118231-NLA	NLA - Cable, MK5 EX Controller Option	1	1

NOTE:
A - Includes items 3-7
B - Includes items 9-11
C - Includes items 13-17
D - Includes item 17
E - Includes items 17 and 22
F - Includes items 17 and 25
G - Clamp assembly is used for all joystick tubes listed
H - The 5 pin connector attaches to MKIV joystick options, MK5 S.A.C., MK5 T.A.C. or MK5 T.R.C.M. controllers.
I - Before 5/24/04
J - Not Shown. After 5/23/04 the Egg Reset Switch replaced the Red Flex Ribbon (Tape) Reset Switch
K - Introduced 10/31/05 as option (ARM250) and can be used to replace a Fixed Height Joystick Clamp in the field
L - Part #1017612 is no longer available as a service part individually. Order item #8 as a replacement.

Electronics

4-Way Switch and Mounting Hardware

NOTE: 4-way switch and MK5 T.A.C. controller are used for ELRPW power articulating legrest.

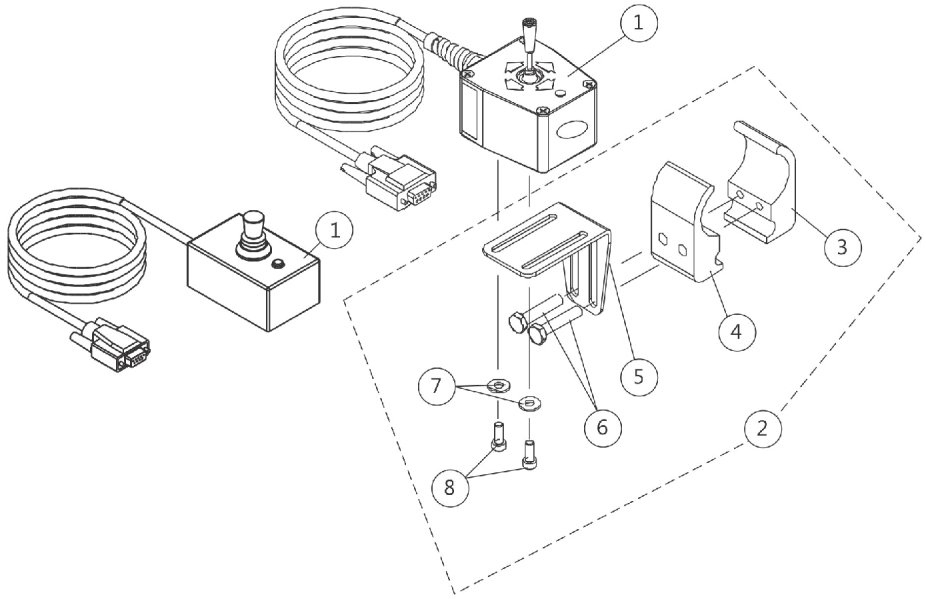

4-Way Switch
Joystick Tube Mounting Hardware

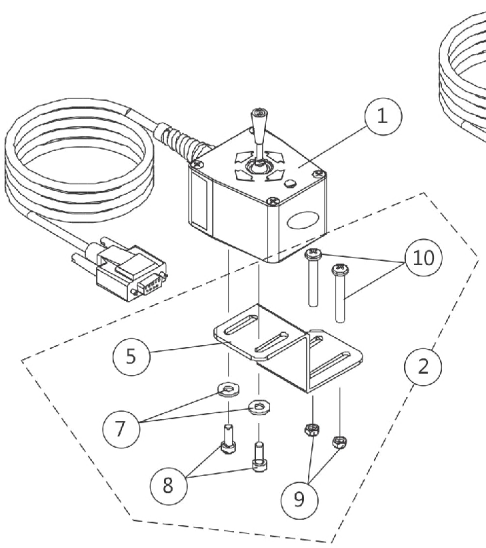

4-Way Switch
Quad Link Mounting Hardware
Before 10/31/05

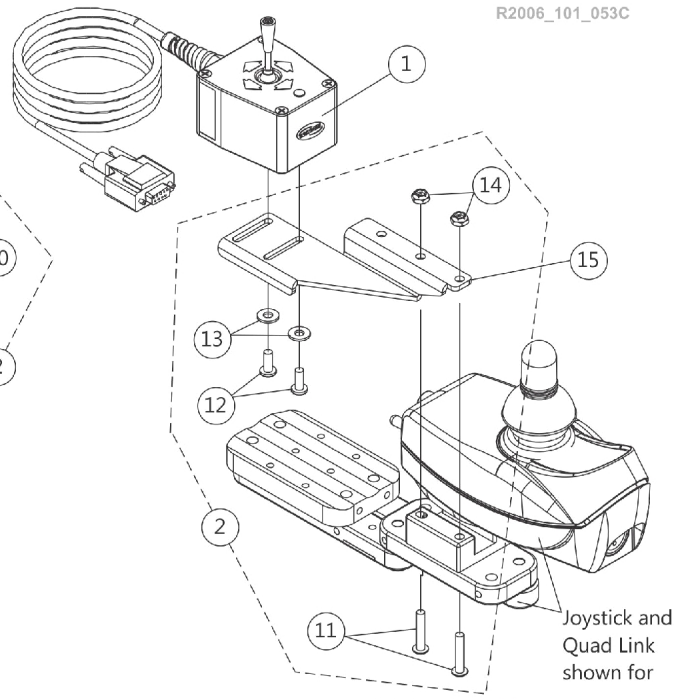

4-Way Switch
Quad Link Mounting Hardware
After 10/30/05

Electronics

4-Way Switch and Mounting Hardware

NOTE: 4-way switch and MK5 T.A.C. controller are used for ELRPW power articulating legrest.

Item Number	Note	Part Number	Description	Quantity Per	
				Package	Assembly
1	D	1080116-NLA	NLA - Switch, 4-Way (FWT)	1	1
1		60105577	Kit, Switch, 4-Way (FWT)	1	1
2	A	1077519	Kit, 4-Way Switch Joystick Tube Mounting Hardware	1	1
3			NLA - Half Clamp, Threaded Holes	1	1
4			Half Clamp, Non-Threaded Holes	1	1
5			NLA - Bracket, Joystick Mounting, Black	1	1
6			NLA - Screw, Hex Head (1/4-20 x 1-1/8")	1	2
7			Washer (#10 Flat)	1	2
8			Screw, Phillips Pan Head (#10-32 x 1/2")	1	2
2	E,B	1077520-NLA	NLA - Kit, 4-Way Switch Quad Link Mounting Hardware	1	1
5			NLA - Bracket, Quad Link Mounting, Black	1	1
7			Washer (#10 Flat)	1	2
8			Screw, Phillips Pan Head (#10-32 x 1/2")	1	2
9			Locknut (#10-32)	1	2
10			Screw, Phillips Pan Head (#10-32 x 1-3/8")	1	2
2	C,E	1139418	Kit, 4-Way Switch Quad Link Mounting Hardware	1	1
11			Screw, Phillips Pan Head w/Patch (#10-32 x 7/8")	1	2
12			Screw, Phillips Pan Head (#10-32 x 1/2")	1	2
13			NLA - Washer, Nylon (#10)	1	2
14			Locknut (#10-32)	1	2
15		1134132	Bracket, 4-Way Switch Quad Link, Black - Right	1	1
15		1134133	Bracket, 4-Way Switch Quad Link, Black - Left	1	1

NOTE: A - Includes items 3-8
B - Before 10/31/05. Includes items 5 and 7-10
C - After 10/30/05. Includes items 11-14.
D - Part #1080116 is No Longer Available. Order Item #1 part number 60105577 as a replacement. New design is rectangular in shape. It is recommended to order new hardware 1077519 as well.
E - 4-Way Toggle Switch 60105577 is not compatible with this hardware.

MK5 TAC and Mounting Hardware

NOTE: MK5 TAC is used when ELRPW power articulating legrest are present

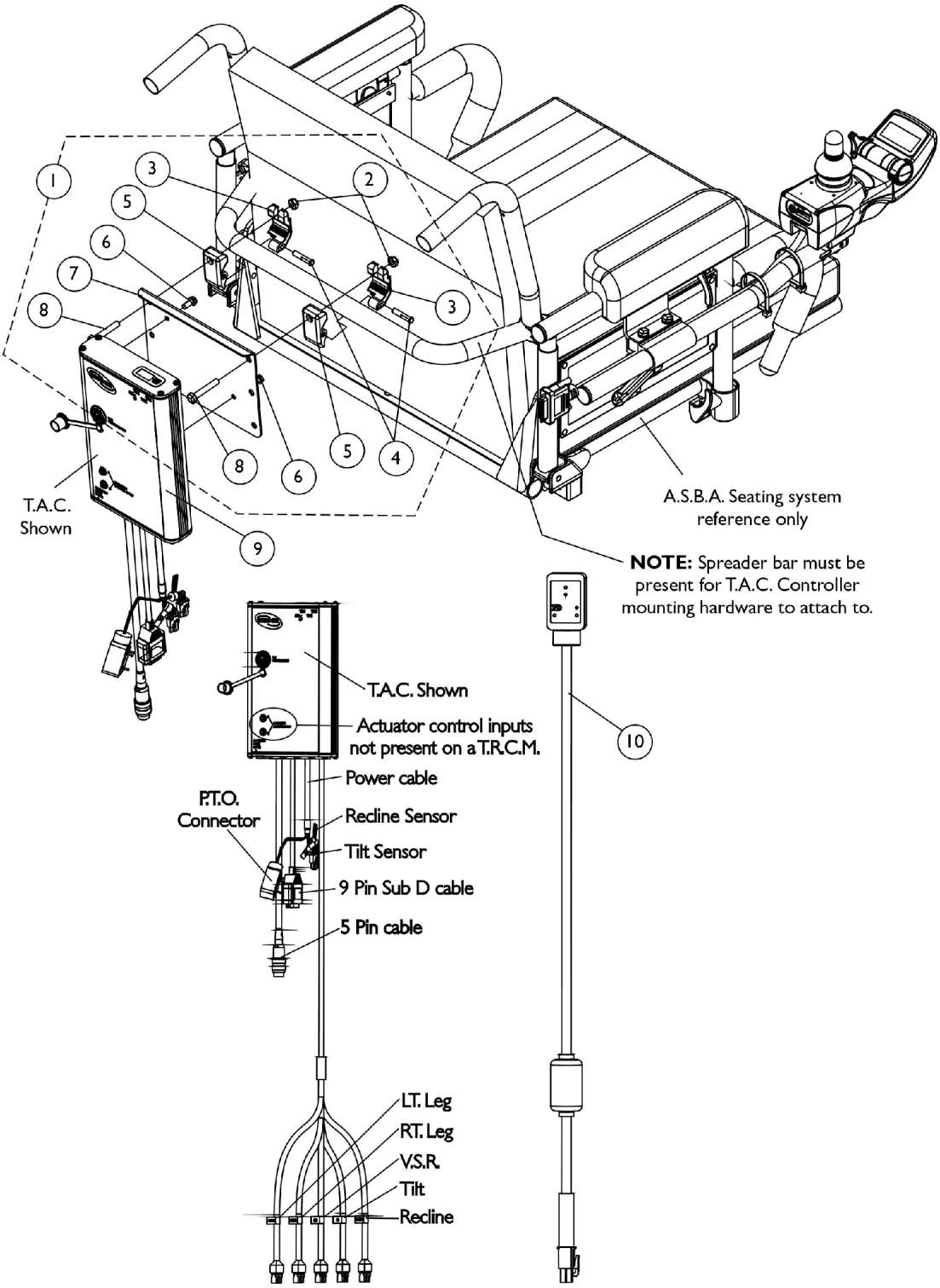

MK5 TAC and Mounting Hardware

NOTE: MK5 TAC is used when ELRPW power articulating legrest are present

Item Number	Note	Part Number	Description	Quantity Per	
				Package	Assembly
1	A	1121121-NLA	NLA - Hardware, MK5 T.A.C. Mounting, A.S.B.A. Seat	1	1
2		60275X000	Locknut (1/4-20)	1	2
3		1113407-NLA	NLA - Clamp, Outer	1	2
4		1113406-NLA	NLA - Pin, Hinge	1	2
5		1113408-NLA	NLA - Clamp, Inner	1	2
6		1079316-NLA	NLA - Screw, Phillips Pan Head w/ Patch (#10-32 x 3/8")	1	2
7		1113601-NLA	NLA - Bracket, Controller Mounting, Black	1	1
8		1070759	Screw, Hex Head (1/4-20 x 1-1/2")	1	2
9	B	1118728-NLA	NLA - Controller, MK5 TAC	1	1
10		1119418	Cable, Auxiliary Power	1	1
	C	1118231-NLA	NLA - Cable, MK5 EX Controller Option	1	1

NOTE: A - Spreader bar must be present before attaching MK5 T.A.C. mounting hardware
B - For MK5 EX controllers, option cable part number 1118231 must be present when using a MK5 T.A.C. controller
C - Not Shown

Tash and Therafin Accessories

NOTE: Used with (MK5 display or MPJ joystick) with SNPM4 Sip-N-Puff/Digital interface

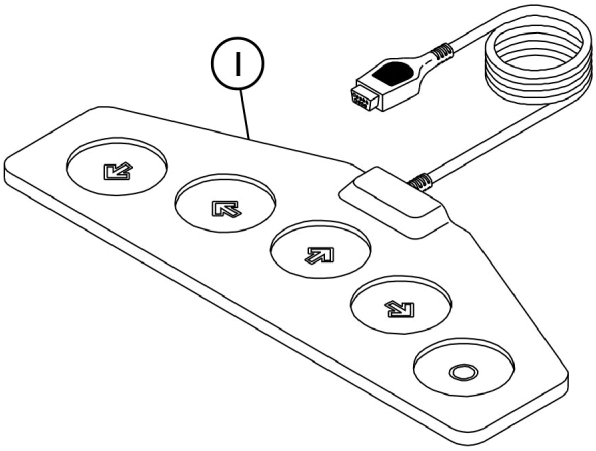

P5018 Wafer Board

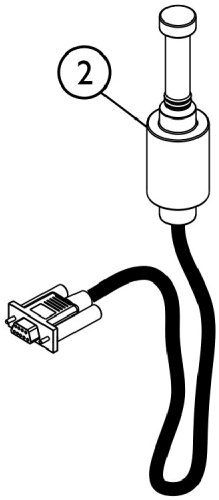

P5020 Mini Joystick with Push

SHEP_089A

Tash and Therafin Accessories

NOTE: Used with (MK5 display or MPJ joystick) with SNPM4 Sip-N-Puff/Digital interface

Item Number	Note	Part Number	Description	Quantity Per	
				Package	Assembly
1		P5018-NLA	NLA - Wafer Board (5018)	1	1
2		P5020-NLA	NLA - Mini Joystick with Push (5020)	1	1
	A	1142362	Bib Assembly (PKG32669)	1	1
	A,B	1140824	Kit, Sip-N-Puff, 16" Fixed (PKG32666) Includes: (3) Air Tube Straws, (2) Saliva Traps, Tubing, Pivot Shaft/Flexible Metal Gooseneck Assembly, and Extruded Figure "8" Clamp to fit 7/8" Wheelchair Frame Tubing. Extruded Back Cane Adapter Clamp.	1	1

NOTE: A - Not Shown
B - See items included

For more information on Tash and Therafin products, please contact one of our Rehab Specialists.

Invacare Corporation

www.invacare.com

One Invacare Way
Elyria, Oh USA
44036-2125
800-333-6900

Technical Support
800-832-4707
Customer Service
800-333-6900

Literature Orders
800-333-6900

© 2022 Invacare Corporation. All rights reserved. Republication, duplication or modification in whole or in part is prohibited without prior written permission from Invacare. Trademarks are identified by ™ and ®. All trademarks are owned by or licensed to Invacare Corporation or its subsidiaries unless otherwise noted.
(Revised 03/22/22)

Form No. 06-101