Invacare® AX3™

Price List and Order Form

Effective September 10, 2007 Revised December 11, 2007

For ease of ordering, contact customer Service Toll Free at:
800-333-6900 Fax: 800-678-4682
To order Literature: 800-828-6282 **www.invacare.com**

Company Name _____ **Account #** _____

Phone _____ **P.O. #** _____ **Date** _____

Ship to Name & Address _____

Special Note

HCPCS codes are not intended to be, nor should be considered billing or legal advice. Providers are responsible for determining the appropriate billing codes when submitting claims to the Medicare Program and should consult an attorney or other advisor to discuss specific situations in further detail.

FRAME SELECTION

FRAME TYPE

- ❑ AX3 — Ultra-Light Manual Wheelchair (K0005) $1,850.00

FRAME WIDTH

- ❑ W16 — 16" Wide ..... No Charge
- ❑ W18 — 18" Wide ..... No Charge
- ❑ W20 — 20" Wide (E2201) $300.00

FRAME DEPTH

- ❑ D16 — 16" Deep ..... **Standard**
- ❑ D18 — 18" Deep ..... No Charge

FRONT SEAT-TO-FLOOR

- ❑ FSTF16 — Front Seat-to-Floor 16" ..... No Charge
- ❑ FSTF17 — Front Seat-to-Floor 17" ..... No Charge
- ❑ FSTF18 — Front Seat-to-Floor 18" ..... No Charge
- ❑ FSTF19 — Front Seat-to-Floor 19" ..... No Charge
- ❑ FSTF20 — Front Seat-to-Floor 20" ..... No Charge

ARM AND BACK SELECTIONS

ARM TYPE

- ❑ TAHD — T Arm Desk Length ..... **Standard**
- ❑ TAHF — T Arm Full Length ..... No Charge
- ❑ FFHD — Flip Back Arm Fixed Height Desk $145.00
- ❑ FFHF — Flip Back Arm Fixed Height Full $145.00
- ❑ FAHD — Flip Back Arm Adj Height Desk (E0973) $245.00
- ❑ FAHF — Flip Back Arm Adj. Height Full (E0973) $245.00

BACK SELECTIONS

BACK SELECTIONS

- ❑ BK016 — 0 Degree Bend Back; 16" Height ..... No Charge
- ❑ BK716 — 7 Degree Bend Back; 16" Height ..... No Charge
- ❑ AAB1618 — Adjustable Angle Back; 16" – 18" ..... $165.00 [1]
- ❑ BK71620 — 7 Degree Bend Back; 16"–20" Height Adjustable Stroller Handles ..... No Charge [2]

CASTER SELECTIONS

CASTERS

- ❑ 61URETH — 6" X 1.25" Urethane ..... **Standard**
- ❑ 81URETH — 8" X 1.25" Urethane ..... No Charge
- ❑ 81PNEU — 8" X 1.25" Pneumatic ..... $60..00
- ❑ 82PNEU — 8" X 2" Pneumatic $60.00
- ❑ 82URETH — 8" X 2" Urethane ..... No Charge

FOOTNOTES

[1] Not available with the Slip On Back Upholstery (SLIPBACK) or BACKS (ITPR, PBR, PBT, PPR, PPT).
[2] Not available with the BACKS (ITPR, PBR, PBT, PPR, PPT).

REAR WHEEL SELECTIONS

WHEEL SELECTIONS

- ❑ 24COM — 24" Composite Wheel ..... **Standard**
- ❑ 24SP — 24" Spoke Wheels (pair) ..... No Charge
- ❑ 22SP — 22" Spoke Wheel $60.00

TIRE SELECTIONS

- ❑ URETH — Urethane Tire ..... **Standard**
- ❑ PNEU — Pneumatic Tire $60.00

HANDRIM SELECTIONS

- ❑ ALAN — Aluminum Anodized Handrim ..... **Standard**
- ❑ STBC — Steel Blk Plastic Coated Handrim $72.00

WHEEL LOCK SELECTIONS (PAIR)

- ❑ WLPUSH — Easy-Transfer Wheel Locks ..... **Standard**
- ❑ WLPUSHX — Easy-Transfer WL w/Extended Handles (E0961) $60.00

AXLES

- ❑ A1577 — Quick Release Axles ..... **Standard**
- ❑ PAXLE — Permanent Axles ..... No Charge

FRAME FINISH SELECTIONS

FRAME FINISH - CONTEMPORARY COLORS

- ❑ 24P — Wet Black ..... No Charge
- ❑ 71P — Silver Vein ..... No Charge
- ❑ 60P — Silver Metallic ..... No Charge
- ❑ 115P — Black Prism ..... No Charge
- ❑ 105P — Midnight Blue ..... No Charge

TOO HOT COLORS

- ❑ 30P — Sunny Yellow ..... No Charge
- ❑ 61P — Electric Red ..... No Charge
- ❑ 119P — Bubblegum Pink ..... No Charge
- ❑ 120P — Grape Madness ..... No Charge

WAY COOL COLORS

- ❑ 62P — Electric Blue ..... No Charge
- ❑ 121P — Lolly Pop Blue ..... No Charge
- ❑ 122P — Cosmic Blue ..... No Charge
- ❑ 125P — Emerald Green ..... No Charge
- ❑ 127P — Grasshopper Green ..... No Charge
- ❑ 104P — Electric Teal ..... No Charge

NOTE: All specifications and dimensions are approximate.
For the most current pricing information go to www.invacare.com.

Invacare® AX3™
Accessories and Options

UPHOLSTERY AND ACCESSORIES

SEAT UPHOLSTERY SELECTIONS

- ❑ USP — Upholstery, Seat Padded Nylon ..... **Standard** [3]
- ❑ USS — Upholstery, Seat, Nylon Hook ..... No Charge
- ❑ L8651 — Omit Seat Upholstery ..... Less $10.00

BACK UPHOLSTERY

- ❑ SLIPBACK — Slip On Back Upholstery ..... **Standard**
- ❑ ADJTENS — Upholstery, Back, Adjustable Tension $125.00
- ❑ L8601 — Omit Back Upholstery ..... Less $10.00

MISCELLANEOUS ACCESSORIES

- ❑ A1321 — Hook and Loop Positioning Strap (E0798) $51.00
- ❑ A1515 — Push Button Seat Positioning Strap (E0798) $51.00
- ❑ A1580 — Rear Anti-tippers (E0971) (pair) $90.00
- ❑ RIGB — Flip Down Rigidizer Bar $50.00

FRONT RIGGING OPTIONS

FRONT RIGGINGS

- ❑ 70SSNTAPER — 70 Deg. Swing-in-Out Footrests…… ..... **Standard**
- ❑ 60SSNTAPER — 60 Deg. Swing-in-Out Footrests ..... ……..No Charge
- ❑ ELRSS — Elevating Legrests (E0990) ..... ……..$255.00

FOOTPLATE OPTIONS

- ❑ 1651 — Flip up Composite Footplates ..... **Standard**
- ❑ AT5543 — Adj Angle Flip-Up Footplates (K0040) $165.00

FOOTREST/LEGREST ACCESSORIES

- ❑ A1337 — Calf Strap (K0038) $27.00
- ❑ IMPACTG — Impact Guards $51.00
- ❑ ALPT — Longer Pivot and Slide Tube $89.00
- ❑ A9342 — "H" Strap (K0039) $51.00
- ❑ HLOOP — Heel Loops w/o Ankle Straps (pair) (E0951) $51.00

SEATING & POSITIONING

CUSHIONS [3]

- ❑ EC — Absolute Cushion (E2601) 101.00
- ❑ ITFG — InTouch Flovair Gentle (E2607) 350.00
- ❑ ITFM — InTouch Flovair Max (E2607) 350.00
- ❑ ITSG — InTouch Stabilite Gentle (E2607) 330.00
- ❑ ITSM — InTouch Stabilite Max (E2607) 330.00

BACKS [4]

- ❑ ITPR — InTouch Propel Back (E2611) 425.00
- ❑ PBR — Personal Back10 Regular (E2615) 550.00
- ❑ PBT — Personal Back10 Tall (E2615) 550.00
- ❑ PPR — Personal Back10 Plus Regular (E2615) 625.00
- ❑ PPT — Personal Back10 Plus Tall (E2615) 625.00

ACCESSORIES

- ❑ CR — Cushion Rigidizer 37.00
- ❑ FP64A — Foam In Place Chemical Kit 200.00

FRONT SEAT-TO-FLOOR HEIGHT CHART [5]

SEAT DUMP 3°	REAR WHEEL		FRONT CASTER			
SEAT HEIGHT			Position 1 (Up)		Position 2 (Down)	
	22”	24”	6”	8”	6”	8”
16	**2***	**1***	**A***	N/A	N/A	N/A
17	**3***	**2***	**B**	N/A	**A***	N/A
18	**4***	**3***	**C**	**B***	**B***	N/A
19	**5***	**4***	N/A	**C**	**C***	**B***
20 [6]	N/A	N/A	N/A	N/A	N/A	N/A

*Factory Setting

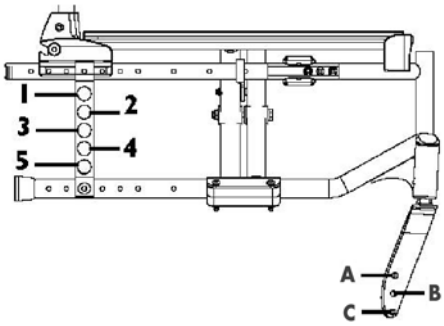

CASTER POSITON

2 DOWN AND 1 UP

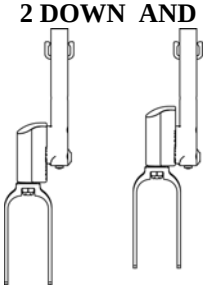

FOOTNOTES

[3] USP is not available with Absolute or InTouch Cushions.
[4] BK71620 and AAB1618 are not available with InTouch or Personal Backs.

FOOTNOTES

[5] 0 and 6 degree seat dumps available. Reference Owners Manual for Details.
[6] 20" Front Seat-to-floor available with 6 degree seat dump only.

Invacare Corporation www.invacare.com

USA
One Invacare Way
Elyria, OH USA
44035-4190
800-333-6900

All rights reserved. Trademarks are identified by the symbols™ and ®.
All trademarks are owned by or licensed to Invacare Corporation unless otherwise noted.
Specifications and prices are subject to change without notification.
©2007 Invacare Corporation

Form No. 07-028 Rev 1207